WIRING DIAGRAM REVISIONS LIST

WIRING DIAGRAM NUMBER BHT-212-MM	WIRING DIAGRAM NUMBER D212-725-2-G2	SHEET #	REV	DATE	NOTES
N/A	N/A	I	D	20.03.20	-Wiring diagram revisions list sheet 1
N/A	N/A	II	D	20.03.20	-Wiring diagram revisions list sheet 2
N/A	N/A	III	D	20.03.20	-Wiring diagram revisions list sheet 3
N/A	N/A	IV	D	20.03.20	-Wiring diagram revisions list sheet 4
98-10	98-10S	1	A	08.11.24	-New issue for updated Generation 2 Helicopters
			B	10.08.10	-Change to Non-Essential Buss Control Relay pin out designators
98-11	98-11S	2	A	08.11.24	-New issue for updated Generation 2 Helicopters
98-12	98-12S	3	A	08.11.24	-New issue for updated Generation 2 Helicopters
98-13	98-13S	4	A	08.11.24	-New issue for updated Generation 2 Helicopters
98-14	98-14S	5	A	08.11.24	-New issue for updated Generation 2 Helicopters
			B	10.08.10	-Removal of unused wires from generator lug E
98-15	98-15S	6	A	08.11.24	-New issue for updated Generation 2 Helicopters
98-16	N/A	N/A	N/A	N/A	-Particle Separator system removed and wiring diagram deleted.
98-17	98-17S	7	A	08.11.24	-New issue for updated Generation 2 Helicopters
98-18	98-18S	8	A	08.11.24	-New issue for updated Generation 2 Helicopters
98-19	98-19S	9	A	08.11.24	-New issue for updated Generation 2 Helicopters
98-20	98-20S	10	A	08.11.24	-New issue for updated Generation 2 Helicopters
			B	10.08.10	-Correction to P281 connector pin labels
98-21	98-21S	11	A	08.11.24	-New issue for updated Generation 2 Helicopters
			B	10.08.10	-Removal of shield ground wire at Oil Pressure Transmitters
98-22	98-22S	12	A	08.11.24	-New issue for updated Generation 2 Helicopters
98-23	98-23S	13	A	08.11.24	-New issue for updated Generation 2 Helicopters
98-24	98-24S	14	A	08.11.24	-New issue for updated Generation 2 Helicopters
			B	10.08.10	-Removal of shield ground wire at Torque Pressure Transmitters

RELEASED
ECN 20-105
2020.04.20

DESIGN	RD	**DART AEROSPACE LTD** HAWKESBURY, ONTARIO, CANADA
DRAWN	WK	
CHECKED	KB	DRAWING NO. D212-725-2-G2 — REV. D — SHEET I OF IV
MFG. APPR.	LJ	
APPROVED	KB	TITLE **WIRING DIAGRAMS** — SCALE NTS
DE APPR.	KB	
DATE 20.03.20		

COPYRIGHT © 2010 BY DART AEROSPACE LTD
THIS DOCUMENT IS PRIVATE AND CONFIDENTIAL AND IS SUPPLIED ON THE EXPRESS CONDITION THAT IT IS NOT TO BE USED FOR ANY PURPOSE OR COPIED OR COMMUNICATED TO ANY OTHER PERSON WITHOUT WRITTEN PERMISSION FROM DART AEROSPACE LTD.

WIRING DIAGRAM NUMBER BHT-212-MM	WIRING DIAGRAM NUMBER D212-725-2-G2	SHEET #	REV	DATE	NOTES
98-25	98-25S	15	A	08.11.24	-New issue for updated Generation 2 Helicopters
			B	10.08.10	-Removal of shield ground wire at Hydraulic Pressure Transmitters
98-26	98-26S	16	A	08.11.24	-New issue for updated Generation 2 Helicopters
			B	10.08.10	-Change to Hourmeter Relay pin out designators
98-27	98-27S	17	A	08.11.24	-New issue for updated Generation 2 Helicopters
98-28	98-28S	18	A	08.11.24	-New issue for updated Generation 2 Helicopters
			B	10.08.10	-Addition of Electronic Attitude Indicator hookup.
98-29	98-29S	19	A	08.11.24	-New issue for updated Generation 2 Helicopters
98-30	98-30S	20	A	08.11.24	-New issue for updated Generation 2 Helicopters
			B	10.08.10	-Removal from diagram of unused 'cap & stowed' wire
98-31	98-31S	21	A	08.11.24	-New issue for updated Generation 2 Helicopters
98-32	98-32S	22	A	08.11.24	-New issue for updated Generation 2 Helicopters
98-33	98-33S	23	A	08.11.24	-New issue for updated Generation 2 Helicopters
			B	10.08.10	-Clarification of shielding at Fuel Quantity Indicator
98-34	98-34S	24	A	08.11.24	-New issue for updated Generation 2 Helicopters
			B	10.08.10	-Addition of Note regarding lighting for Electronic ADI
98-35	98-35S	25	A	08.11.24	-New issue for updated Generation 2 Helicopters
			B	10.08.10	-Addition of Note regarding lighting for Electronic ADI
98-36	98-36S	26	A	08.11.24	-New issue for updated Generation 2 Helicopters
			B	10.08.10	-Correction to lighting pinouts for MGT/EGT and Fuel Px Indicators
98-37	98-37S	27	A	08.11.24	-New issue for updated Generation 2 Helicopters
			B	10.08.10	-Change to Master Caution Fail Relay pin out designators
98-38 Sheet 1	98-38S Sheet 1	28	A	08.11.24	-New issue for updated Generation 2 Helicopters
			B	10.08.10	-Wire gauge change for Fuel Differential Pressure Switch
98-38 Sheet 2	98-38S Sheet 2	29	A	08.11.24	-New issue for updated Generation 2 Helicopters

RELEASED
ECN 20-105
2020.04.20

DESIGN	RD	**DART AEROSPACE LTD** HAWKESBURY, ONTARIO, CANADA
DRAWN	WK	
CHECKED	KB	DRAWING NO. D212-725-2-G2 — REV. D — SHEET II OF IV
MFG. APPR.	LJ	
APPROVED	KB	TITLE **WIRING DIAGRAMS** — SCALE NTS
DE APPR.	KB	
DATE 20.03.20		

COPYRIGHT © 2010 BY DART AEROSPACE LTD
THIS DOCUMENT IS PRIVATE AND CONFIDENTIAL AND IS SUPPLIED ON THE EXPRESS CONDITION THAT IT IS NOT TO BE USED FOR ANY PURPOSE OR COPIED OR COMMUNICATED TO ANY OTHER PERSON WITHOUT WRITTEN PERMISSION FROM DART AEROSPACE LTD.

WIRING DIAGRAM NUMBER BHT-212-MM	WIRING DIAGRAM NUMBER D212-725-2-G2	SHEET #	REV	DATE	NOTES
98-38 Sheet 3	98-38S Sheet 3	30	A	08.11.24	-New issue for updated Generation 2 Helicopters
98-38 Sheet 4	98-38S Sheet 4	31	A	08.11.24	-New issue for updated Generation 2 Helicopters
			C	17.10.25	-Revised to include diode near J9005 and Note 17.
98-38 Sheet 5	98-38S Sheet 5	32	A	08.11.24	-New issue for updated Generation 2 Helicopters
			C	17.10.25	-Revised to include Rotor Brake Pins U and V on P43, alternate circuit breaker wiring for new MCP, and Notes 16 and 17
			D	20.03.20	-Added MCP part number.
98-39	98-39S	33	A	08.11.24	-New issue for updated Generation 2 Helicopters
98-40	98-40S	34	A	08.11.24	-New issue for updated Generation 2 Helicopters
98-41	98-41S	35	A	08.11.24	-New issue for updated Generation 2 Helicopters
98-42	98-42S	36	A	08.11.24	-New issue for updated Generation 2 Helicopters
98-43	98-43S	37	A	08.11.24	-New issue for updated Generation 2 Helicopters
98-44	98-44S	38	A	08.11.24	-New issue for updated Generation 2 Helicopters
98-45	98-45S	39	A	08.11.24	-New issue for updated Generation 2 Helicopters
98-46	98-46S	40	A	08.11.24	-New issue for updated Generation 2 Helicopters
98-47	98-47S	41	A	08.11.24	-Wiring routed thru CB panel disconnects.
98-48	98-48S	42	A	08.11.24	-New issue for updated Generation 2 Helicopters
98-49	98-49S	43	A	08.11.24	-New issue for updated Generation 2 Helicopters
98-54	98-54S	44	A	08.11.24	-New issue for updated Generation 2 Helicopters
98-55	98-55S	45	A	08.11.24	-New issue for updated Generation 2 Helicopters
98-56	98-56S	46	A	08.11.24	-New issue for updated Generation 2 Helicopters
98-57	98-57S	47	A	08.11.24	-New issue for updated Generation 2 Helicopters
98-58	N/A	N/A	N/A	N/A	-Wiring diagram deleted.
98-59	98-59S	48	A	08.11.24	-New issue for updated Generation 2 Helicopters
98-60	98-60S	49	A	08.11.24	-New issue for updated Generation 2 Helicopters
			C	17.10.25	-Revised to include note on Effectivity of Serial Numbers.

RELEASED
ECN 20-105
2020.04.20

DESIGN	RD	**DART AEROSPACE LTD** HAWKESBURY, ONTARIO, CANADA
DRAWN	WK	
CHECKED	KB	DRAWING NO. D212-725-2-G2 — REV. D — SHEET III OF IV
MFG. APPR.	LJ	
APPROVED	KB	TITLE **WIRING DIAGRAMS** — SCALE NTS
DE APPR.	KB	
DATE 20.03.20		

COPYRIGHT © 2010 BY DART AEROSPACE LTD
THIS DOCUMENT IS PRIVATE AND CONFIDENTIAL AND IS SUPPLIED ON THE EXPRESS CONDITION THAT IT IS NOT TO BE USED FOR ANY PURPOSE OR COPIED OR COMMUNICATED TO ANY OTHER PERSON WITHOUT WRITTEN PERMISSION FROM DART AEROSPACE LTD.

WIRING DIAGRAM NUMBER BHT-212-MM	WIRING DIAGRAM NUMBER D212-725-2-G2	SHEET #	REV	DATE	NOTES
98-61	98-61S	50	A	08.11.24	-New issue for updated Generation 2 Helicopters
98-62	98-62S	51	A	08.11.24	-New issue for updated Generation 2 Helicopters
98-63	98-63S	52	A	08.11.24	-New issue for updated Generation 2 Helicopters
98-64	98-64S	53	A	08.11.24	-New issue for updated Generation 2 Helicopters
98-65	98-65S	54	A	08.11.24	-New issue for updated Generation 2 Helicopters
			C	17.10.25	-Revised to include View A and added Notes 3 and 4.
			D	20.03.20	-Added MCP part number.
98-66	98-66S	55	A	08.11.24	-New issue for updated Generation 2 Helicopters
98-67	98-67S	56	A	08.11.24	-New issue for updated Generation 2 Helicopters
98-68	98-68S	57	A	08.11.24	-New issue for updated Generation 2 Helicopters

RELEASED
ECN 20-105
2020.09.20

DESIGN	RD	**DART AEROSPACE LTD** HAWKESBURY, ONTARIO, CANADA
DRAWN	WK	
CHECKED	KB	DRAWING NO. D212-725-2-G2 — REV. D — SHEET IV OF IV
MFG. APPR.	LJ	
APPROVED	KB	TITLE **WIRING DIAGRAMS** — SCALE NTS
DE APPR.	KB	
DATE 20.03.20		

COPYRIGHT © 2010 BY DART AEROSPACE LTD
THIS DOCUMENT IS PRIVATE AND CONFIDENTIAL AND IS SUPPLIED ON THE EXPRESS CONDITION THAT IT IS NOT TO BE USED FOR ANY PURPOSE OR COPIED OR COMMUNICATED TO ANY OTHER PERSON WITHOUT WRITTEN PERMISSION FROM DART AEROSPACE LTD.

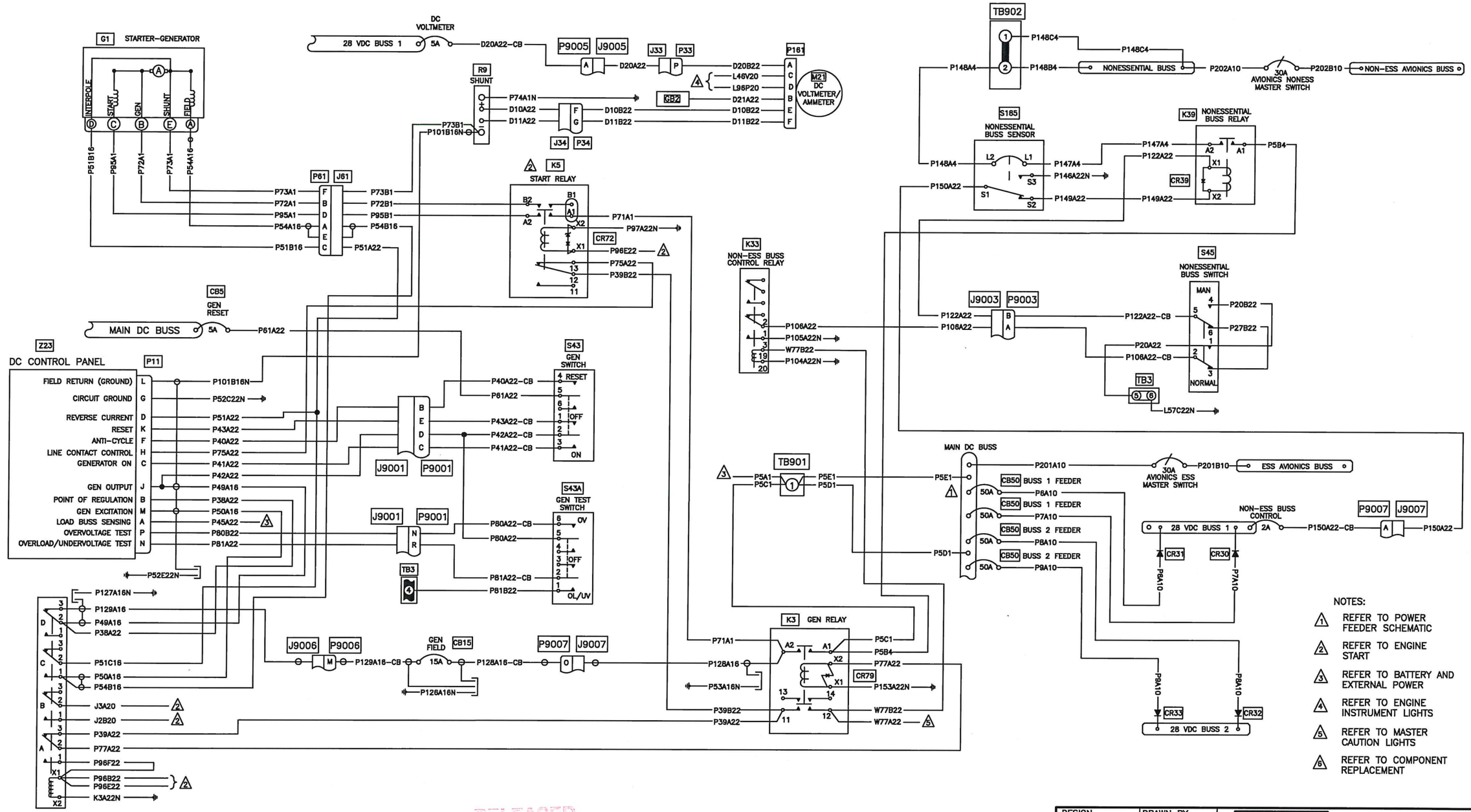

RELEASED
ECN 20-105
2020.04.20

Figure 98-10S. DC GENERATOR SYSTEM

DESIGN	DRAWN BY	DART AEROSPACE LTD HAWKESBURY, ONTARIO, CANADA	
RD	RD		
CHECKED	APPROVED	DRAWING NO.	REV. B
RD	KB	D212-725-2-G2	SHEET 1 OF 57
DATE		TITLE	SCALE
10.08.10		FIGURE 98-10S	NTS

Copyright 2008 by DART AEROSPACE LTD

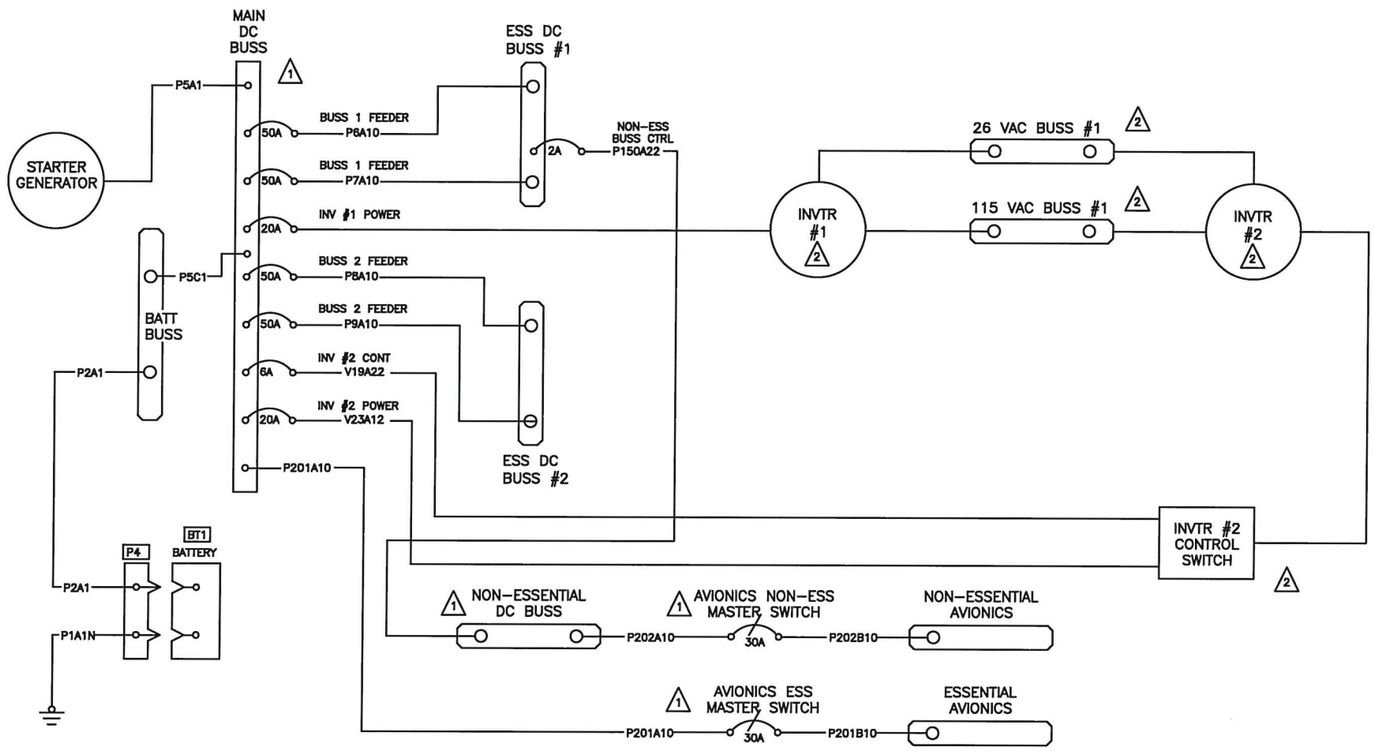

NOTES:

1. REFER TO DC POWER
2. REFER TO AC POWER

RELEASED
ECN 20-105
2020.09.20

Figure 98-11S. DC and AC Power Feeder Schematic (Simplified)

(EFFECTIVE ON ALL S/N, EXCEPT 30687, 30931, 30576, 30817 & 30599)

DESIGN	DRAWN BY	DART AEROSPACE LTD HAWKESBURY, ONTARIO, CANADA	
RD	RD		
CHECKED	APPROVED	DRAWING NO.	REV. A
RD	KB	D212-725-2-G2	SHEET 2 OF 57
DATE		TITLE	SCALE
08.11.24		FIGURE 98-11S	NTS

Copyright 2008 by DART AEROSPACE LTD

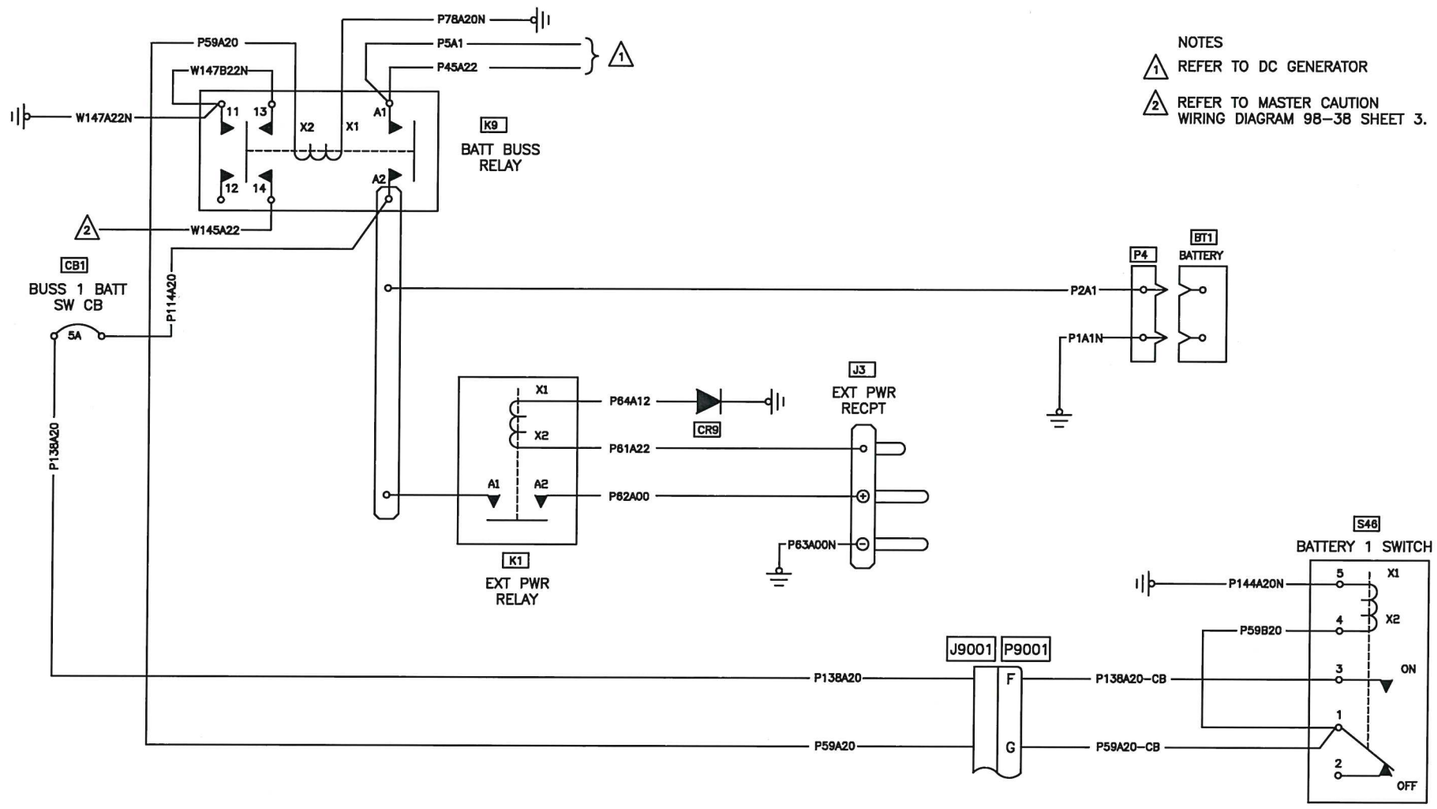

NOTES

1. REFER TO DC GENERATOR
2. REFER TO MASTER CAUTION WIRING DIAGRAM 98–38 SHEET 3.

Figure 98–12S. BATTERY AND EXTERNAL POWER

RELEASED
ECN 20-105
2020.04.20

DESIGN	DRAWN BY	DART AEROSPACE LTD HAWKESBURY, ONTARIO, CANADA	
RD	RD		
CHECKED	APPROVED	DRAWING NO.	REV. A
RD	KB	D212–725–2–G2	SHEET 3 OF 57
DATE		TITLE	SCALE
08.11.24		FIGURE 98–12S	NTS

Copyright 2008 by DART AEROSPACE LTD

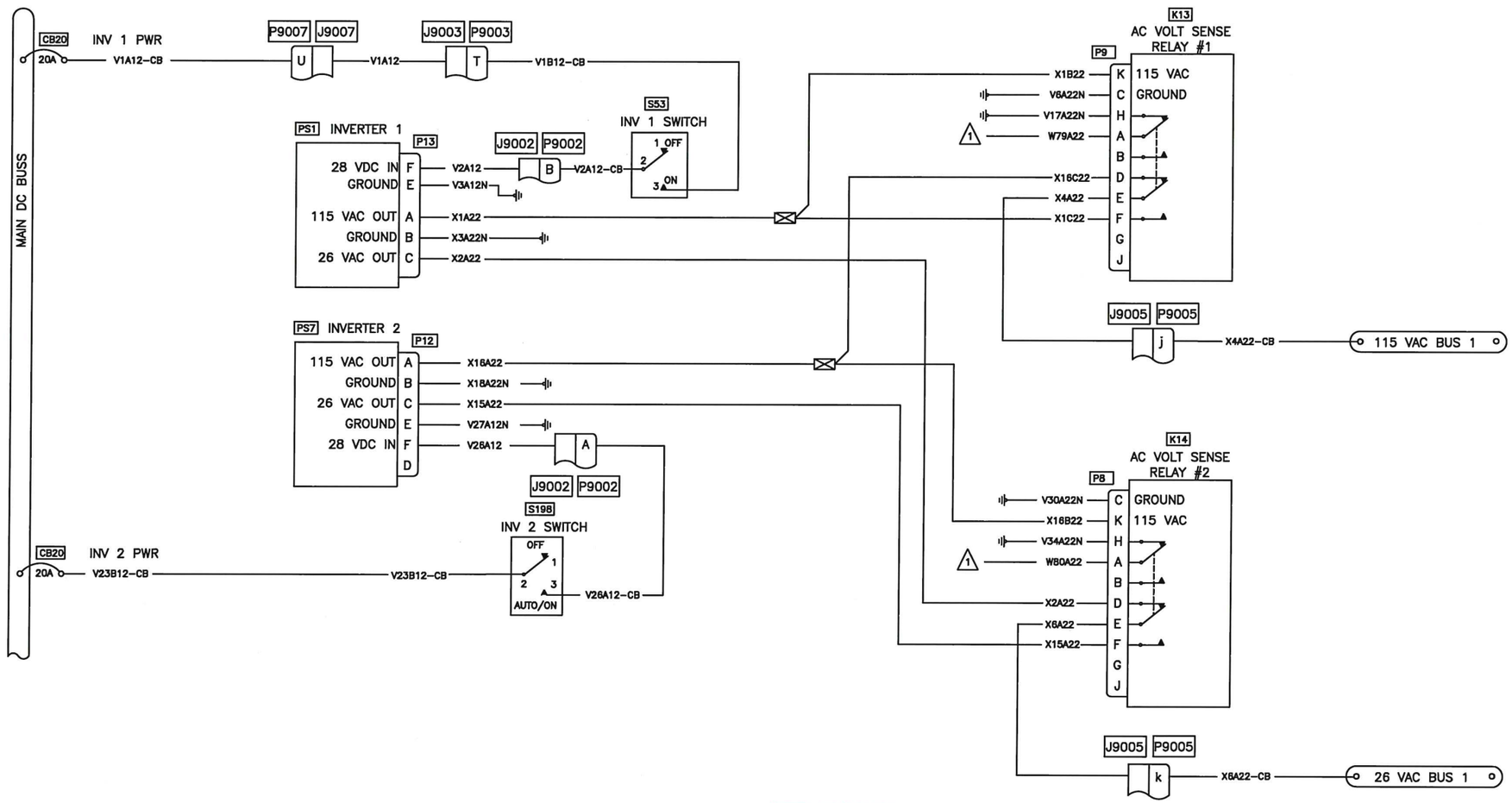

NOTES:

1. REFER TO MASTER CAUTION LIGHTS

RELEASED
ECN 20-105
2020.04.20

Figure 98-13S. AC POWER
(EFFECTIVE ON ALL S/N, EXCEPT 30687, 30931, 30576, 30817 & 30599)

DESIGN	DRAWN BY	DART AEROSPACE LTD HAWKESBURY, ONTARIO, CANADA	
RD	RD		
CHECKED	APPROVED	DRAWING NO.	REV. A
RD		D212-725-2-G2	SHEET 4 OF 57
DATE		TITLE	SCALE
08.11.24		FIGURE 98-13S	NTS

Copyright 2008 by DART AEROSPACE LTD

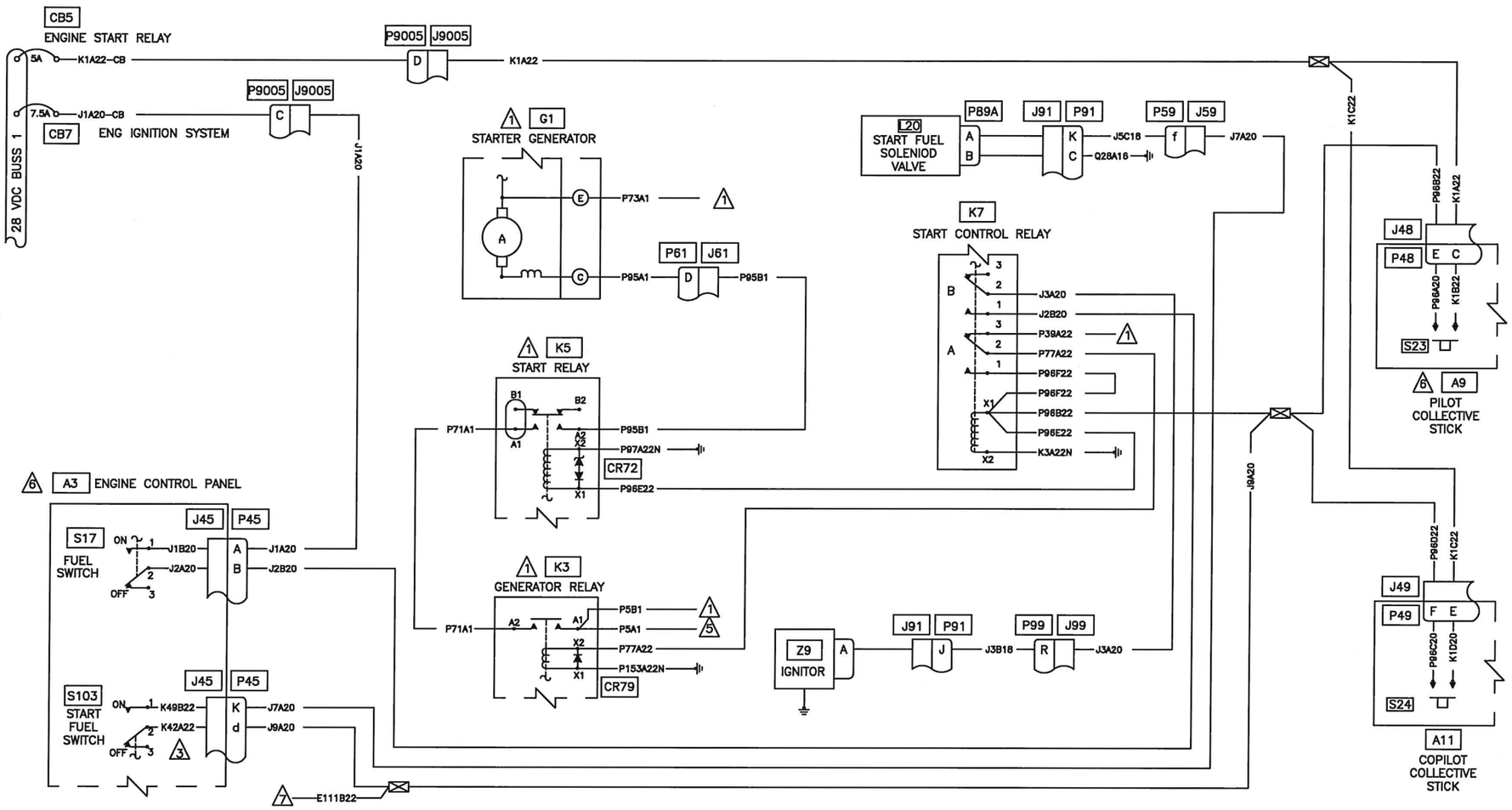

NOTES:

1. REFER TO DC GENERATOR
2. REFER TO FUEL SYSTEM
3. SWITCH INSTALLED PER START FUEL S.T.C. SH4T15NM
4. REFER TO MASTER CAUTION AND RPM CAUTION LIGHTS
5. REFER TO BATTERY AND EXTERNAL POWER
6. REFER TO COMPONENT REPLACEMENT
7. REFER TO MGT INDICATOR WIRING DIAGRAM 98-23S. INSTALLED ONLY IF ANALOG/DIGITAL GAUGE INSTALLED.

RELEASED
ECN 20-105
2020.04.20

Figure 98-14S. ENGINE START
(EFFECTIVE ON ALL S/N, EXCEPT 30687, 30931, 30576, 30817 & 30599)

DESIGN	DRAWN BY	DART AEROSPACE LTD HAWKESBURY, ONTARIO, CANADA	
RD	RD		
CHECKED	APPROVED	DRAWING NO.	REV. B
RD	KB	D212-725-2-G2	SHEET 5 OF 57
DATE		TITLE	SCALE
10.08.10		FIGURE 98-14S	NTS

Copyright 2008 by DART AEROSPACE LTD

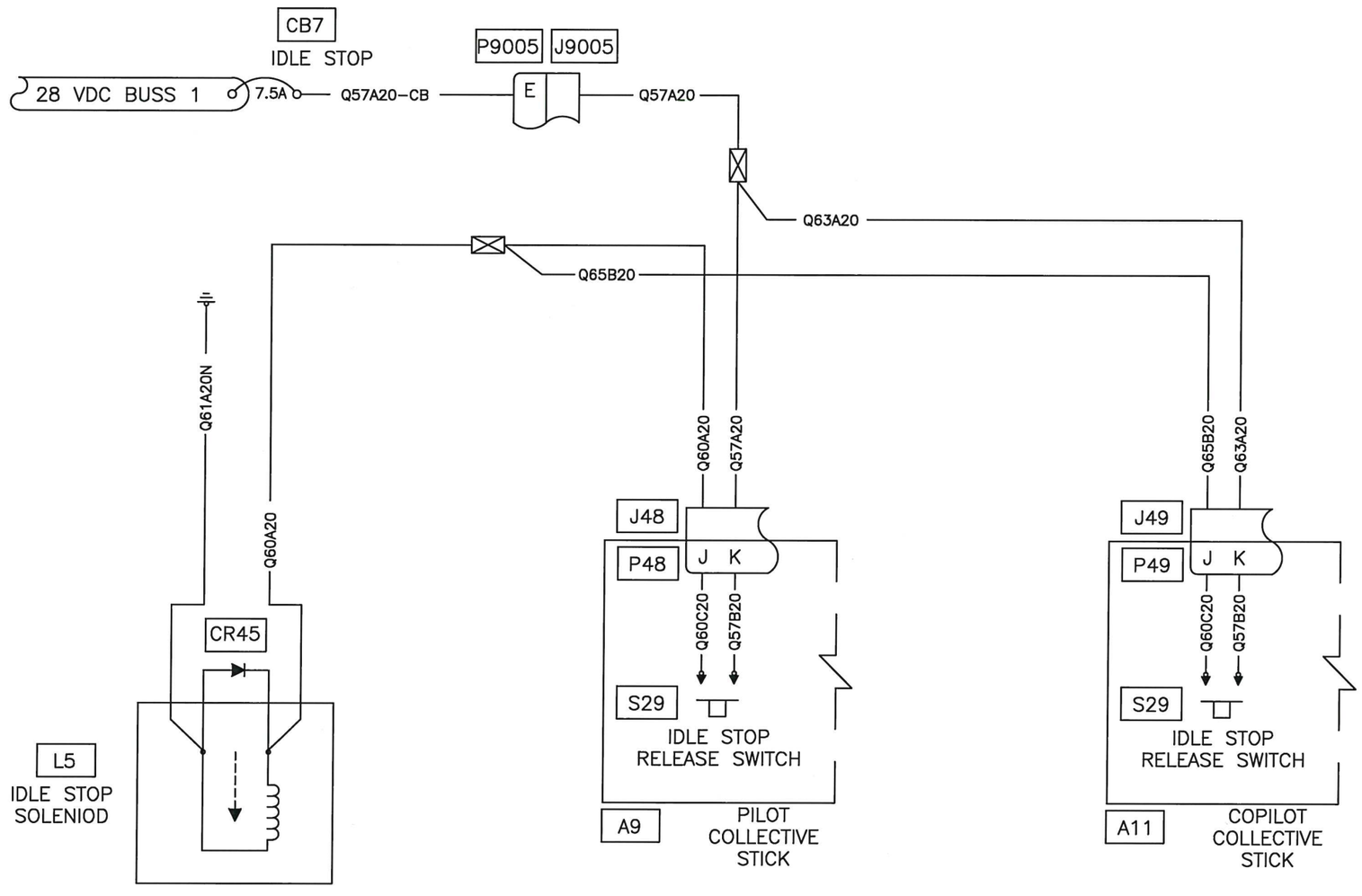

RELEASED
ECN20-105
2020.04.20

Figure 98–15S. IDLE STOP
(EFFECTIVE ON ALL S/N, EXCEPT 30687, 30931, 30576, 30817 & 30599)

DESIGN	DRAWN BY	DART AEROSPACE LTD HAWKESBURY, ONTARIO, CANADA	
RD	RD		
CHECKED	APPROVED	DRAWING NO.	REV. A
RD	KB	D212–725–2–G2	SHEET 6 OF 57
DATE		TITLE	SCALE
08.11.24		FIGURE 98–15S	NTS

Copyright 2008 by DART AEROSPACE LTD

NOTES:

1. REFER TO MASTER CAUTION AND RPM CAUTION LIGHTS
2. DELETED
3. REFER TO FORWARD AUDIO CONTROL
4. REFER TO TACHOMETER SYSTEM

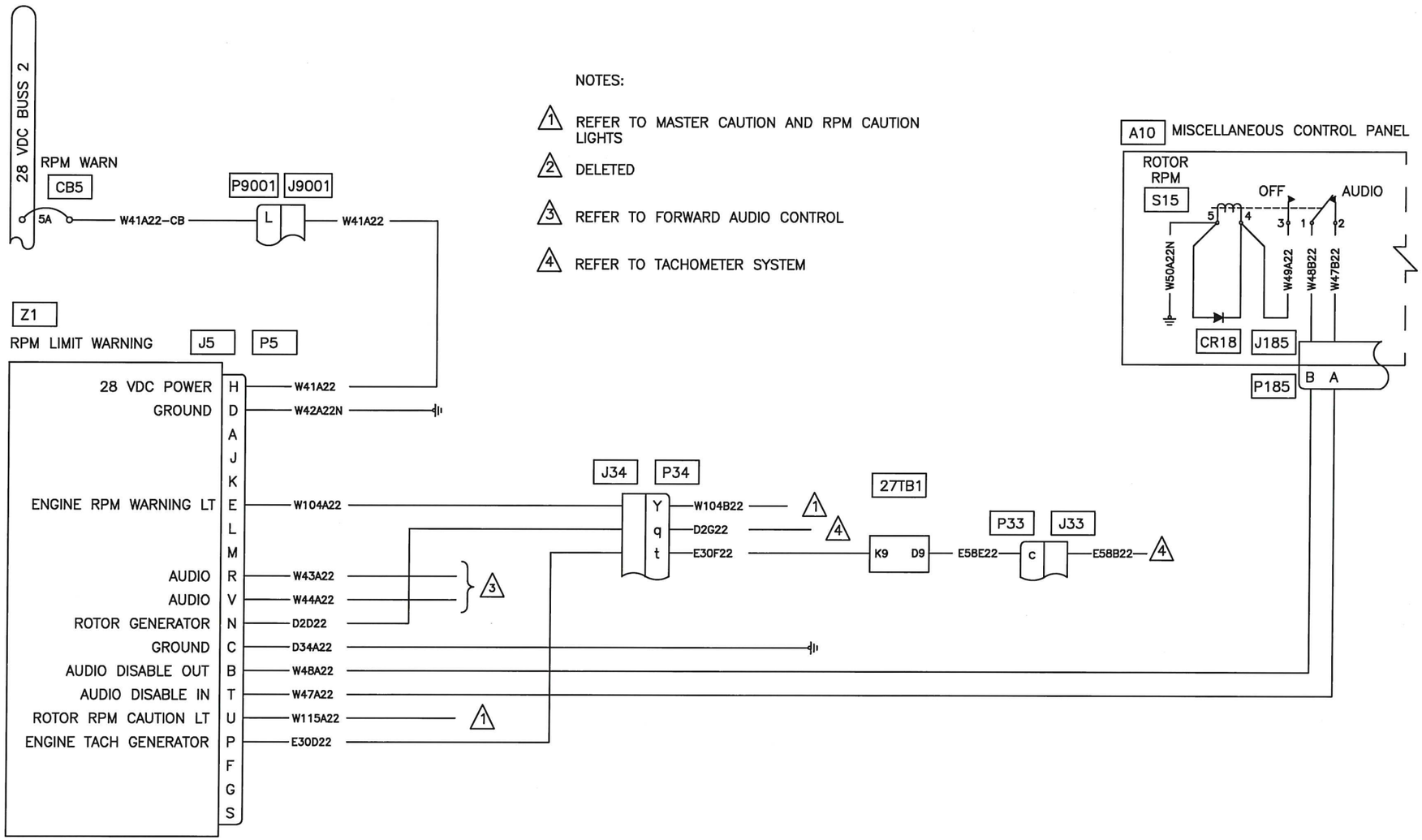

RELEASED
ECN 20-105
2020.04.20

Figure 98–17S. RPM LIMIT DETECTOR
(EFFECTIVE ON ALL S/N, EXCEPT 30687, 30931, 30576, 30817 & 30599)

DESIGN	DRAWN BY	DART AEROSPACE LTD HAWKESBURY, ONTARIO, CANADA	
RD	RD		
CHECKED	APPROVED	DRAWING NO.	REV. A
RD	KB	D212–725–2–G2	SHEET 7 OF 57
DATE		TITLE	SCALE
08.11.24		FIGURE 98–17S	NTS

Copyright 2008 by DART AEROSPACE LTD

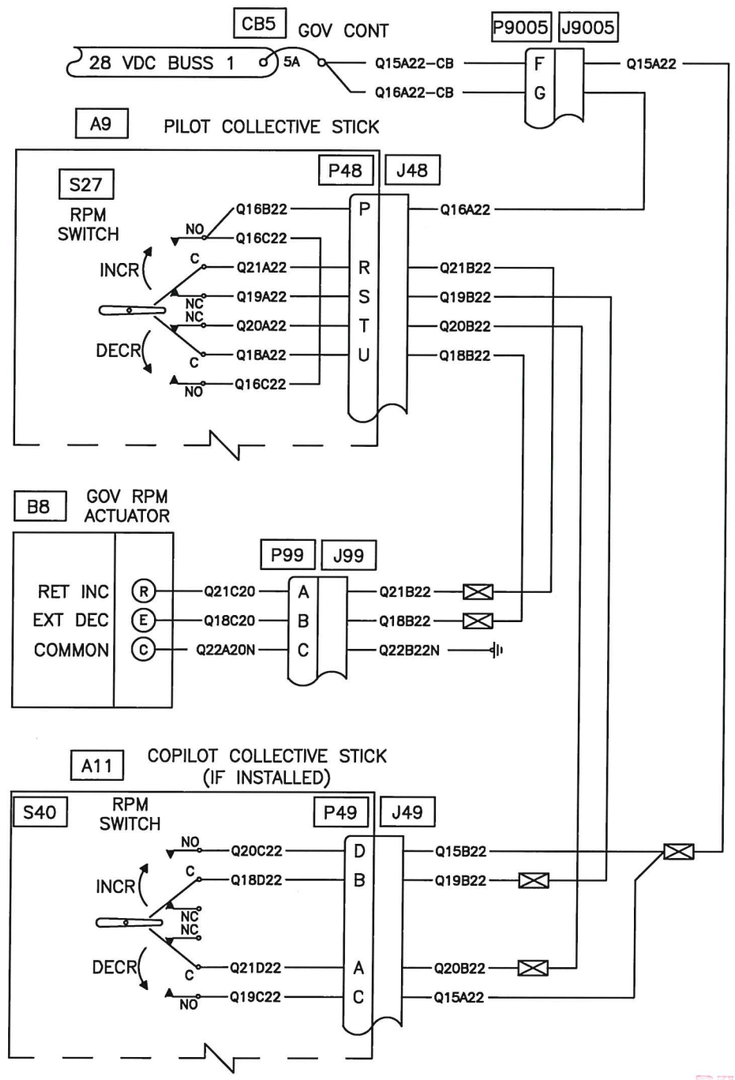

RELEASED
ECN 20-105
2020.04.20

Figure 98–18S. GOVERNOR RPM
(EFFECTIVE ON ALL S/N, EXCEPT 30687, 30931, 30576, 30817 & 30599)

DESIGN RD	DRAWN BY RD	DART	DART AEROSPACE LTD HAWKESBURY, ONTARIO, CANADA
CHECKED RD	APPROVED KA	DRAWING NO. D212–725–2–G2	REV. A SHEET 8 OF 57
DATE 08.11.24		TITLE FIGURE 98–18S	SCALE NTS

Copyright 2008 by DART AEROSPACE LTD

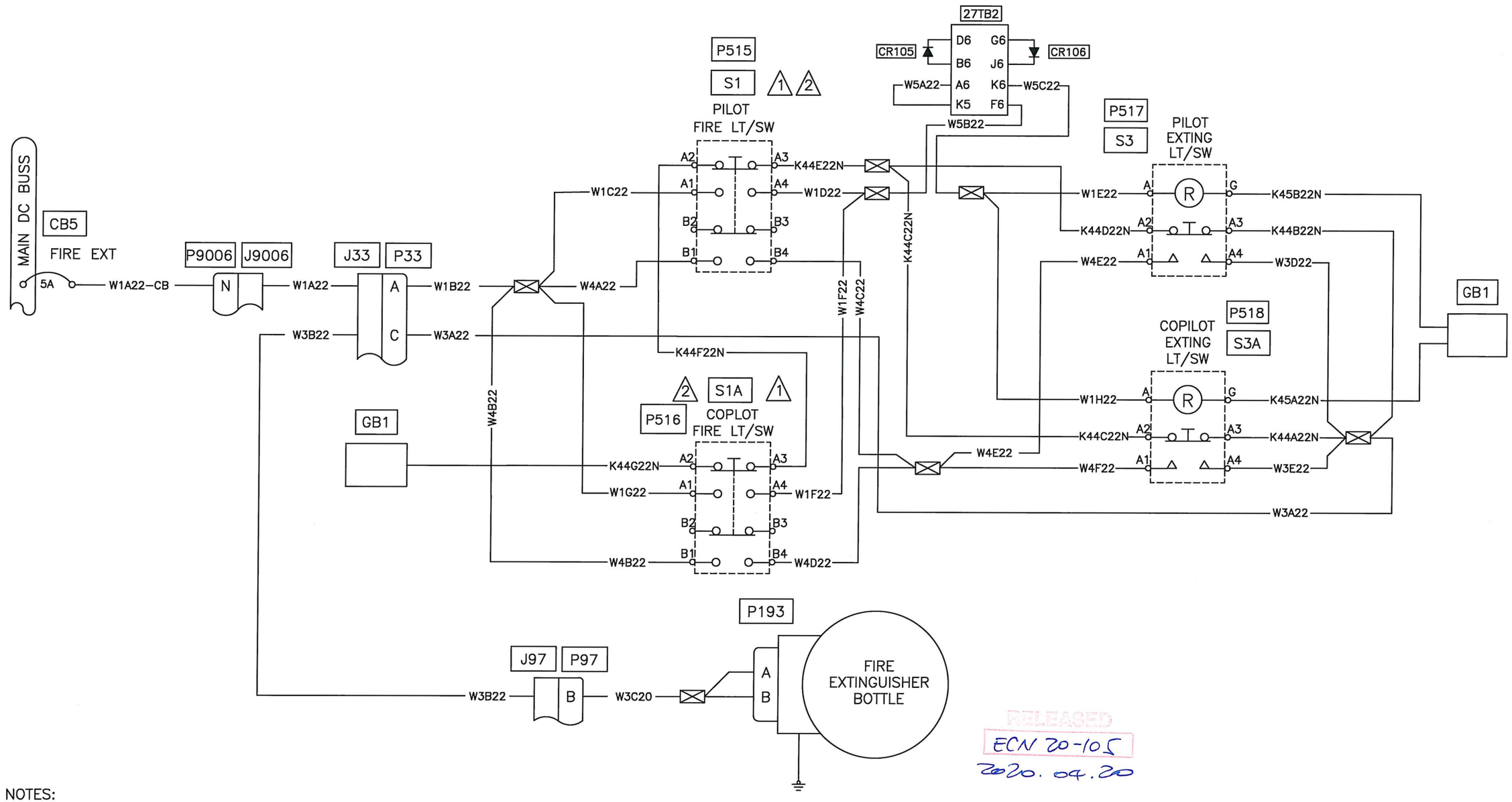

RELEASED
ECN 20-105
2020.04.20

NOTES:

1. REFER TO FIRE DETECTION SYSTEM, 98–20, FOR LIGHT HOOKUP.
2. REFER TO HEATING/AIR CONDITIONING SYSTEM FOR ADDITIONAL SWITCH POSITION HOOKUP.

Figure 98–19S. FIRE EXTINGUISHER SYSTEM
(EFFECTIVE ON ALL S/N, EXCEPT 30687, 30931, 30576, 30817 & 30599)

DESIGN RD	DRAWN BY RD	DART	DART AEROSPACE LTD HAWKESBURY, ONTARIO, CANADA
CHECKED RD	APPROVED KB	DRAWING NO. D212–725–2–G2	REV. A SHEET 9 OF 57
DATE 08.11.24		TITLE FIGURE 98–19S	SCALE NTS

Copyright 2008 by DART AEROSPACE LTD

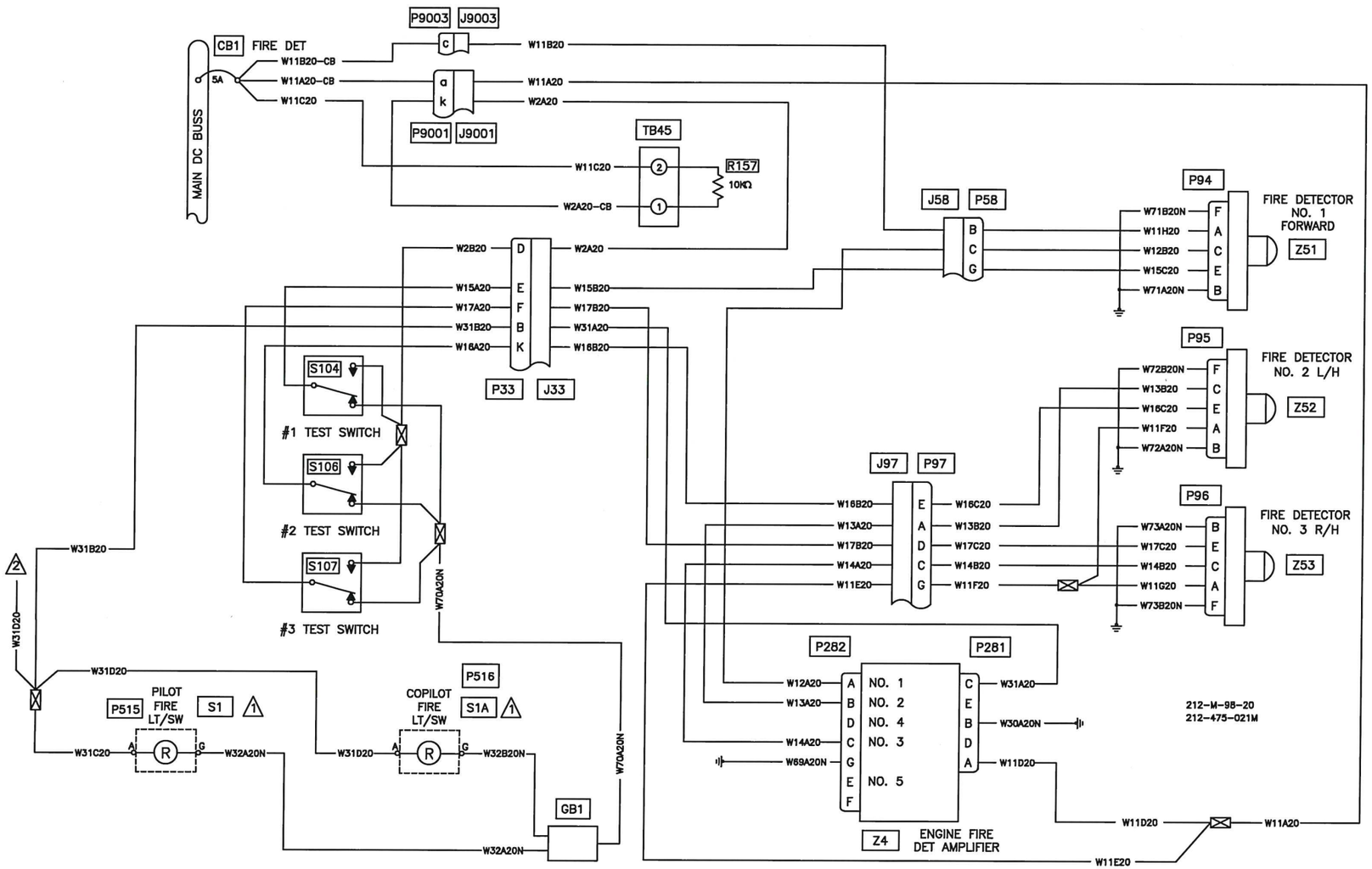

RELEASED
ECN 20-105
2020.09.20

NOTES:

1. REFER TO 98-19, EXTINGUISHER SYSTEM AND 98-60, HEATER/AIR CONDITIONING SYSTEM FOR SWITCH OPERATION.
2. REFER TO VERTICAL REFERENCE DOOR WIRING DIAGRAM IF INSTALLED

Figure 98-20S. ENGINE FIRE DETECTION
(EFFECTIVE ON ALL S/N, EXCEPT 30687, 30931, 30576, 30817 & 30599)

DESIGN	DRAWN BY	DART AEROSPACE LTD HAWKESBURY, ONTARIO, CANADA	
RD	RD		
CHECKED	APPROVED	DRAWING NO.	REV. B
RD	KB	D212-725-2-G2	SHEET 10 OF 57
DATE		TITLE	SCALE
10.08.10		FIGURE 98-20S	NTS

Copyright 2008 by DART AEROSPACE LTD

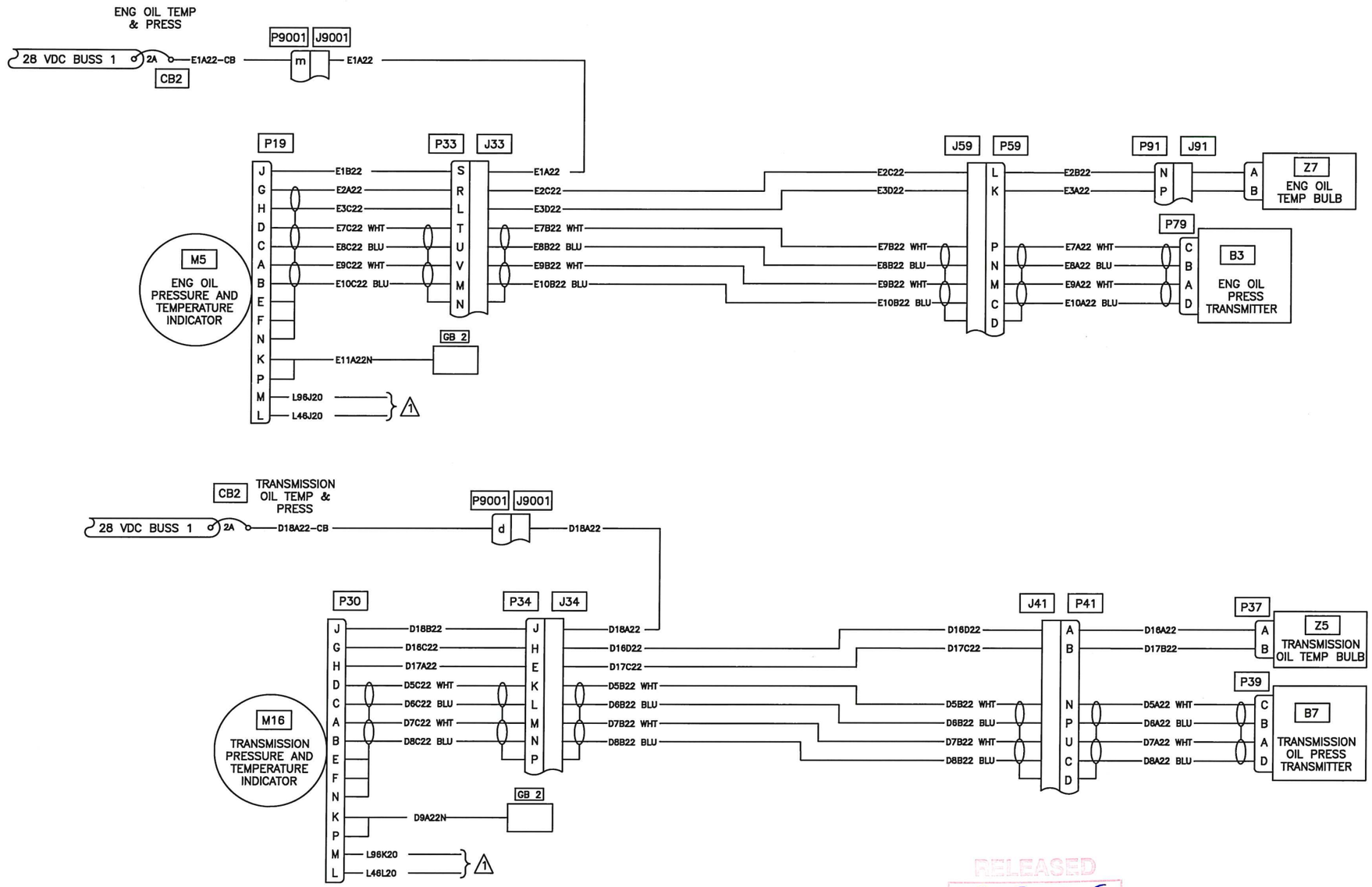

NOTES:

1. REFER TO ENGINE INSTRUMENT LIGHTS
2. REFER TO COMPONENT REPLACEMENT

RELEASED
ECN 20-105
2020.04.20

Figure 98-21S. ENGINE & TRANSMISSION PRESSURE AND TEMPERATURE INDICATORS
(EFFECTIVE ON ALL S/N, EXCEPT 30687, 30931, 30576, 30817 & 30599)

DESIGN	DRAWN BY	DART AEROSPACE LTD HAWKESBURY, ONTARIO, CANADA	
RD	RD		
CHECKED	APPROVED	DRAWING NO.	REV. B
RD	KB	D212-725-2-G2	SHEET 11 OF 57
DATE		TITLE	SCALE
10.08.10		FIGURE 98-21S	NTS

Copyright 2008 by DART AEROSPACE LTD

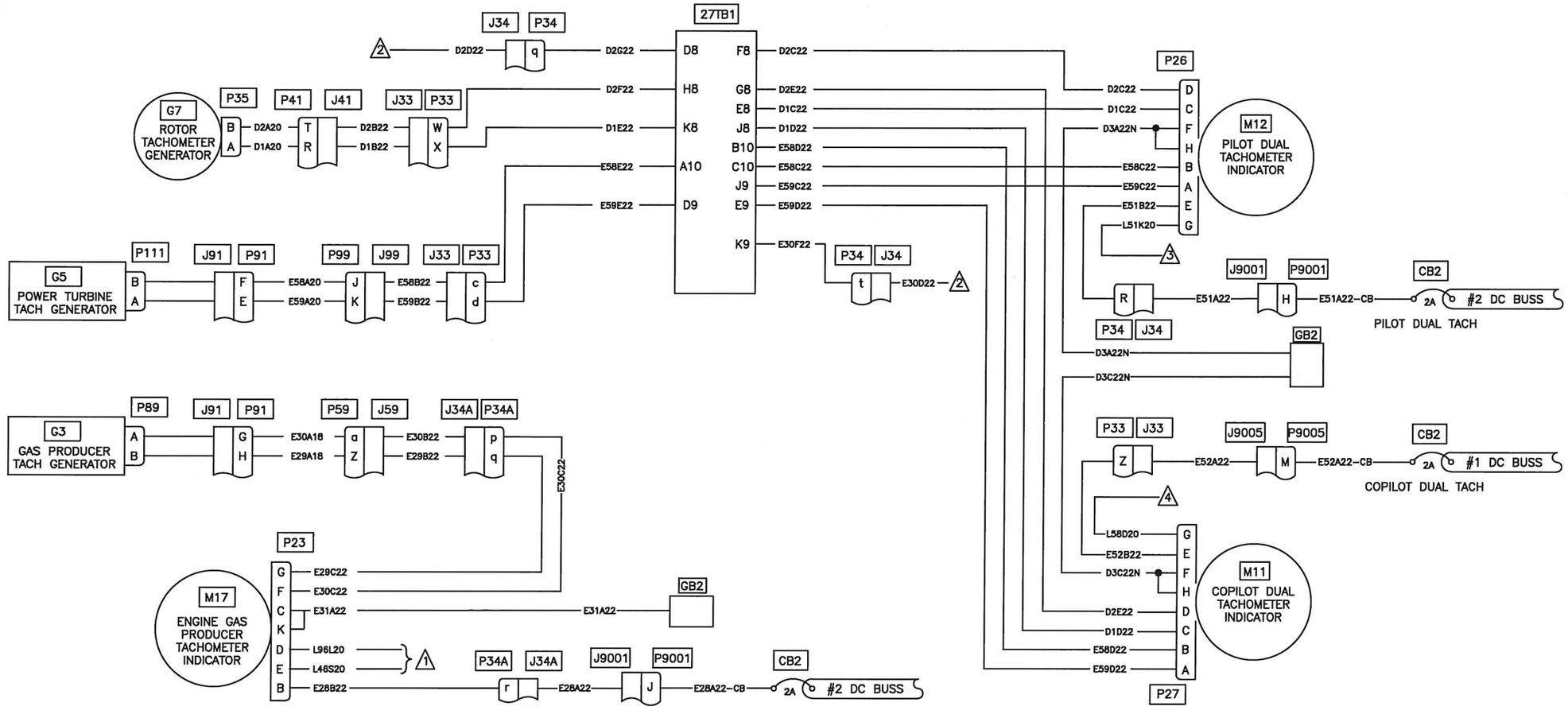

NOTES:

1. REFER TO ENGINE INSTRUMENT LIGHTS WIRING DIAGRAM 98–36S
2. REFER TO RPM LIMIT DETECTOR WIRING DIAGRAM 98–17S
3. REFER TO PILOTS INSTRUMENT LIGHTING WIRING DIAGRAM 98–34S
4. REFER TO COPILOTS INSTRUMENT LIGHTING WIRING DIAGRAM 98–35S

RELEASED
ECN 20-105
2020.04.20

Figure 98–22S. DUAL TACHOMETER AND GAS PRODUCER TACHOMETER INDICATOR SYSTEM
(EFFECTIVE ON ALL S/N, EXCEPT 30687, 30931, 30576, 30817 & 30599)

DESIGN	DRAWN BY	DART AEROSPACE LTD HAWKESBURY, ONTARIO, CANADA	
RD	RD		
CHECKED	APPROVED	DRAWING NO.	REV. A
RD	KB	D212–725–2–G2	SHEET 12 OF 57
DATE		TITLE	SCALE
08.11.24		FIGURE 98–22S	NTS

Copyright 2008 by DART AEROSPACE LTD

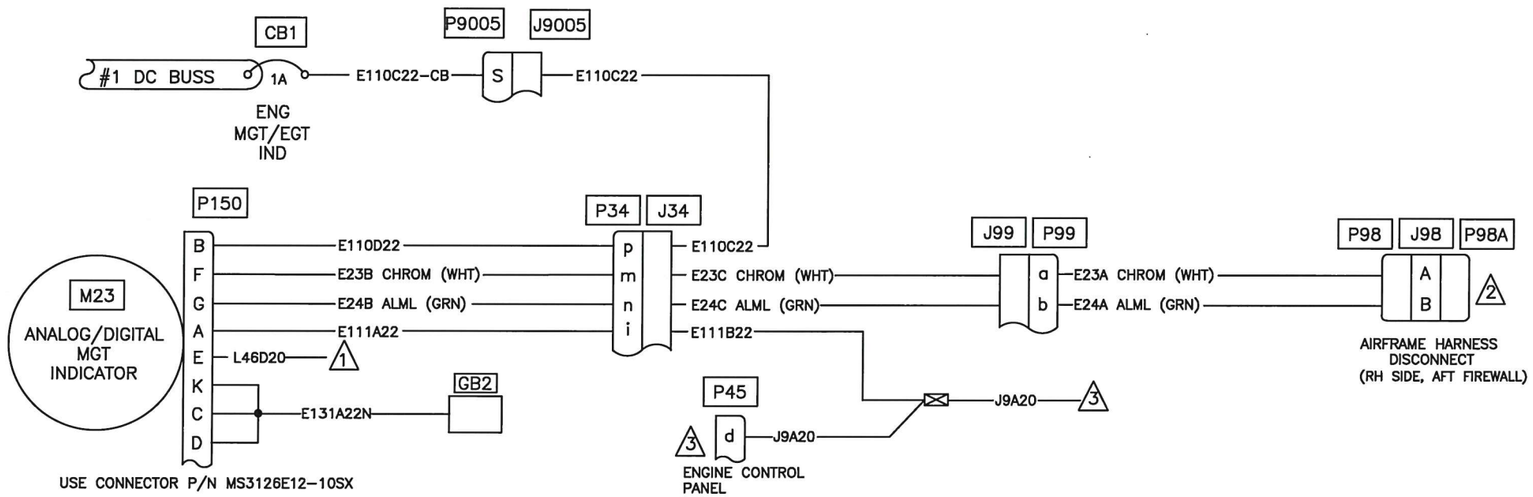

NOTES:

1. REFER TO ENGINE INSTRUMENT LIGHTS WIRING DIAGRAM 98-36S.
2. REFER TO ENGINE MANUFACTURER'S MAINTENANCE MANUAL
3. REFER TO ENGINE START WIRING DIAGRAM 98-14S.

RELEASED
ECN 20-105
2020.04.20

Figure 98-23S. MGT/EGT INDICATOR SYSTEM
(EFFECTIVE ON ALL S/N, EXCEPT 30687, 30931, 30576, 30817 & 30599)

DESIGN	DRAWN BY	DART AEROSPACE LTD HAWKESBURY, ONTARIO, CANADA	
RD	RD		
CHECKED	APPROVED	DRAWING NO.	REV. A
RD	KB	D212-725-2-G2	SHEET 13 OF 57
DATE		TITLE	SCALE
08.11.24		FIGURE 98-23S	NTS

Copyright 2008 by DART AEROSPACE LTD

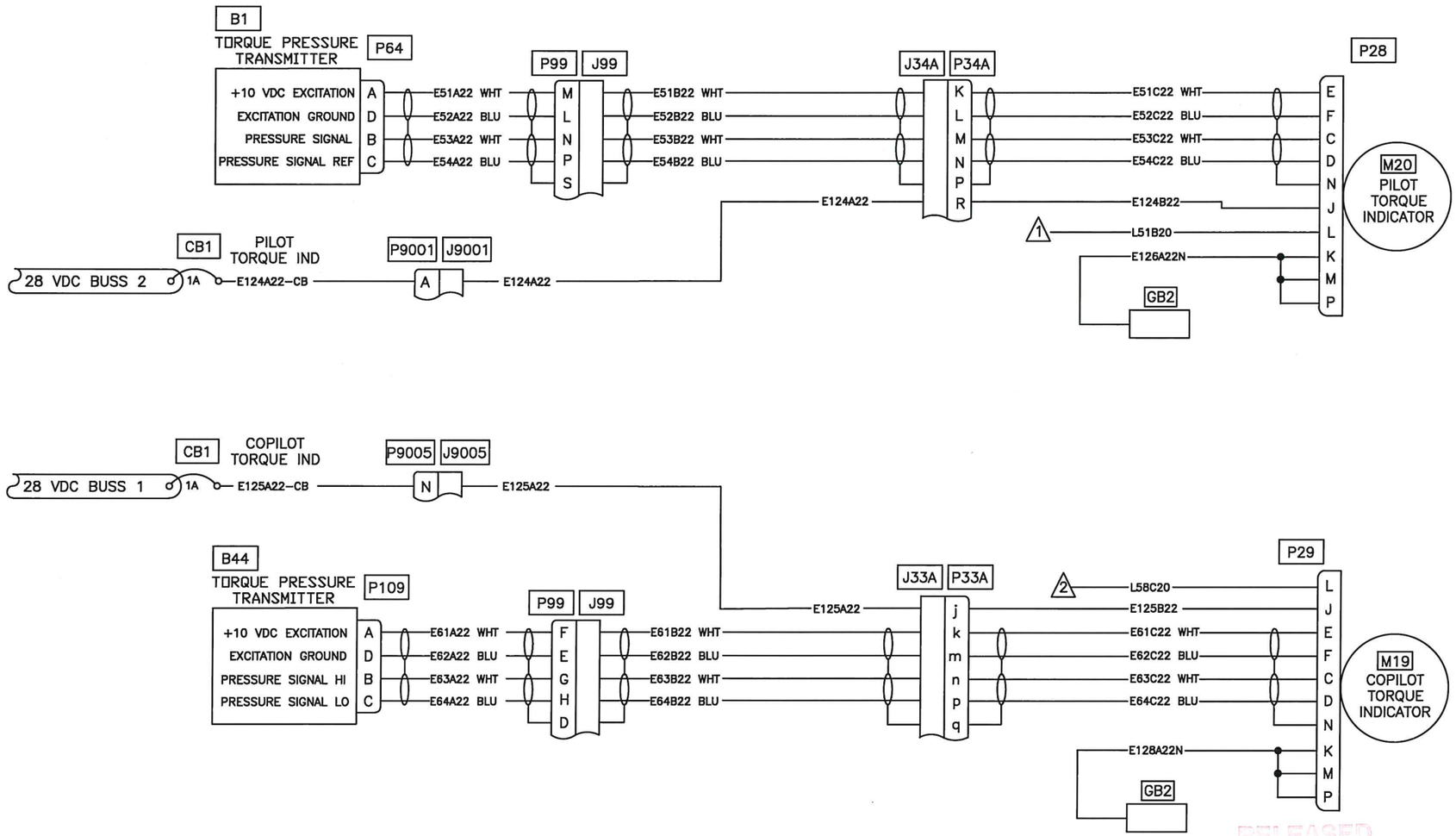

NOTES:

1. REFER TO PILOTS INSTRUMENT LIGHTING WIRING DIAGRAM 98–34S.
2. REFER TO COPILOTS INSTRUMENT LIGHTING WIRING DIAGRAM 98–35S.

RELEASED
ECN 20-105
2020.04.20

Figure 98–24S. TORQUE INDICATOR SYSTEM
(EFFECTIVE ON ALL S/N, EXCEPT 30687, 30931, 30576, 30817 & 30599)

DESIGN	DRAWN BY	DART AEROSPACE LTD HAWKESBURY, ONTARIO, CANADA	
RD	RD		
CHECKED	APPROVED	DRAWING NO.	REV. B
RD		D212–725–2–G2	SHEET 14 OF 57
DATE		TITLE	SCALE
10.08.10		FIGURE 98–24S	NTS

Copyright 2008 by DART AEROSPACE LTD

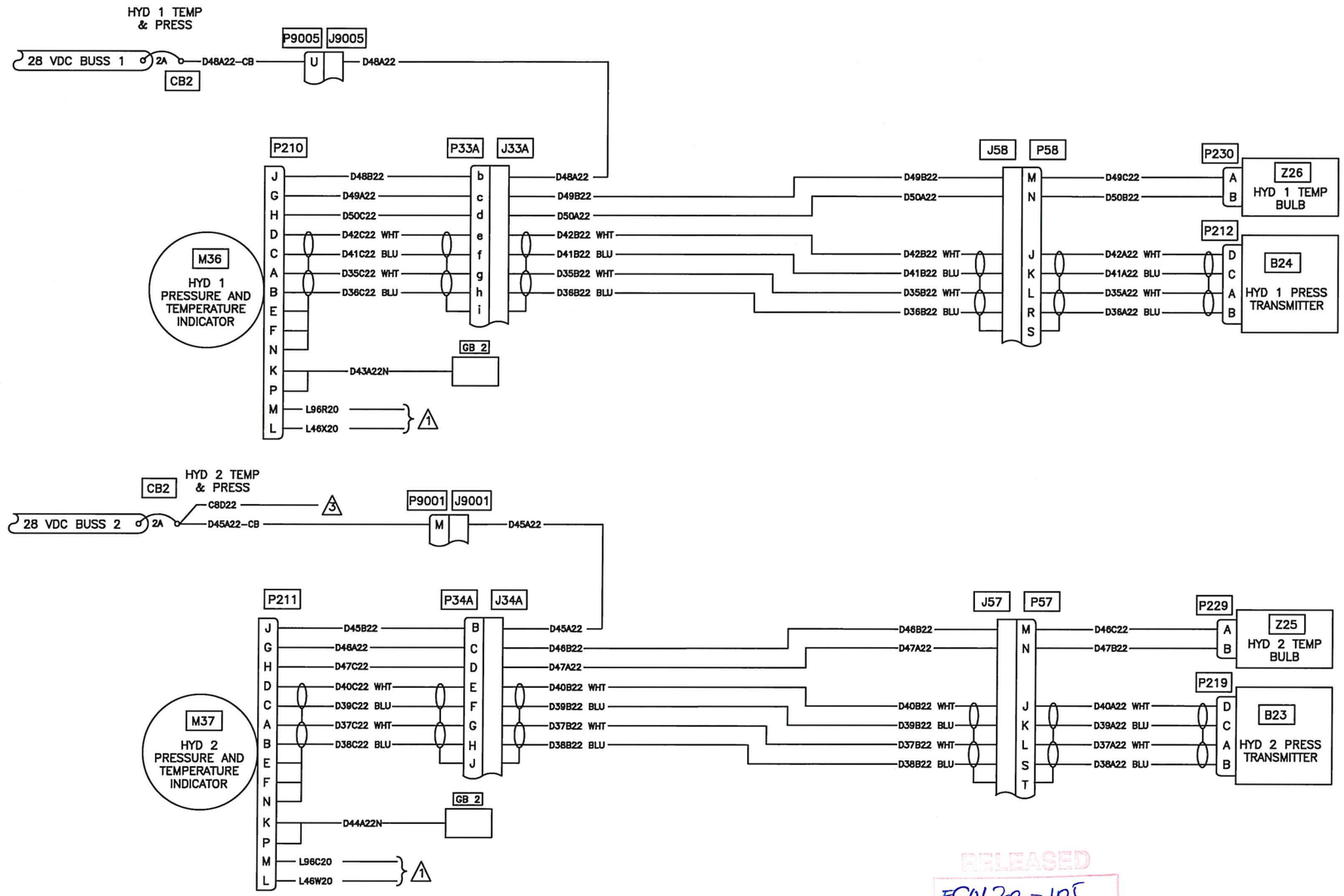

NOTES:

1. REFER TO ENGINE INSTRUMENT LIGHTS
2. REFER TO COMPONENT REPLACEMENT
3. REFER TO HYDRAULIC SYSTEM

RELEASED
ECN 20-105
2020.04.20

Figure 98-25S. HYDRAULIC PRESSURE AND TEMPERATURE INDICATORS
(EFFECTIVE ON ALL S/N, EXCEPT 30687, 30931, 30576, 30817 & 30599)

DESIGN	DRAWN BY	DART AEROSPACE LTD HAWKESBURY, ONTARIO, CANADA	
RD	RD		
CHECKED	APPROVED	DRAWING NO.	REV. B
RD	KB	D212-725-2-G2	SHEET 15 OF 57
DATE		TITLE	SCALE
10.08.10		FIGURE 98-25S	NTS

Copyright 2008 by DART AEROSPACE LTD

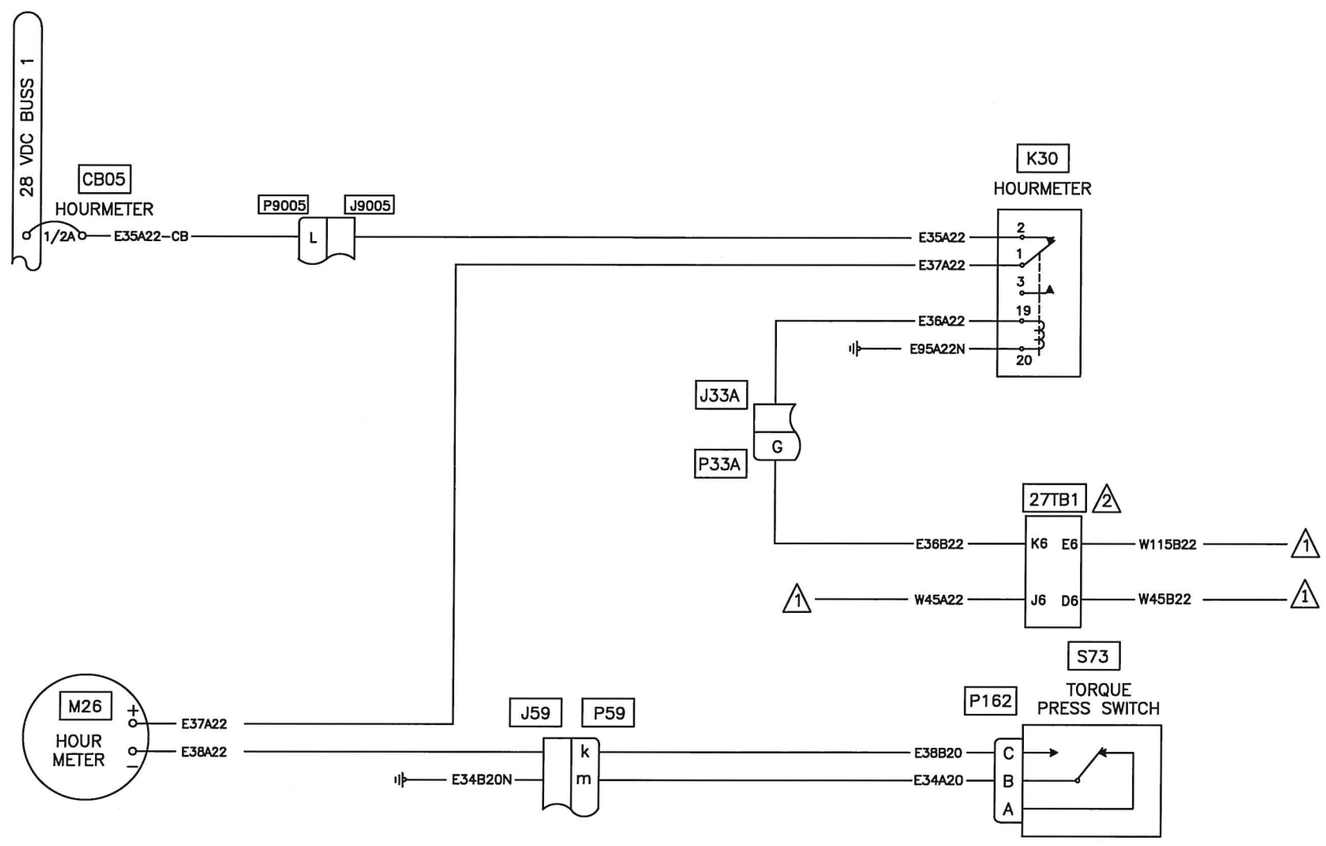

NOTES:

1. REFER TO MASTER CAUTION AND RPM CAUTION LIGHTS
2. REFER TO COMPONENT REPLACEMENT

RELEASED
ECN 20-105
2020.04.20

Figure 98–26S. HOURMETER
(EFFECTIVE ON ALL S/N, EXCEPT 30687, 30931, 30576, 30817 & 30599)

DESIGN	DRAWN BY	DART AEROSPACE LTD HAWKESBURY, ONTARIO, CANADA	
RD	RD		
CHECKED	APPROVED	DRAWING NO.	REV. B
RD	KB	D212–725–2–G2	SHEET 16 OF 57
DATE		TITLE	SCALE
10.08.10		FIGURE 98–26S	NTS

Copyright 2008 by DART AEROSPACE LTD

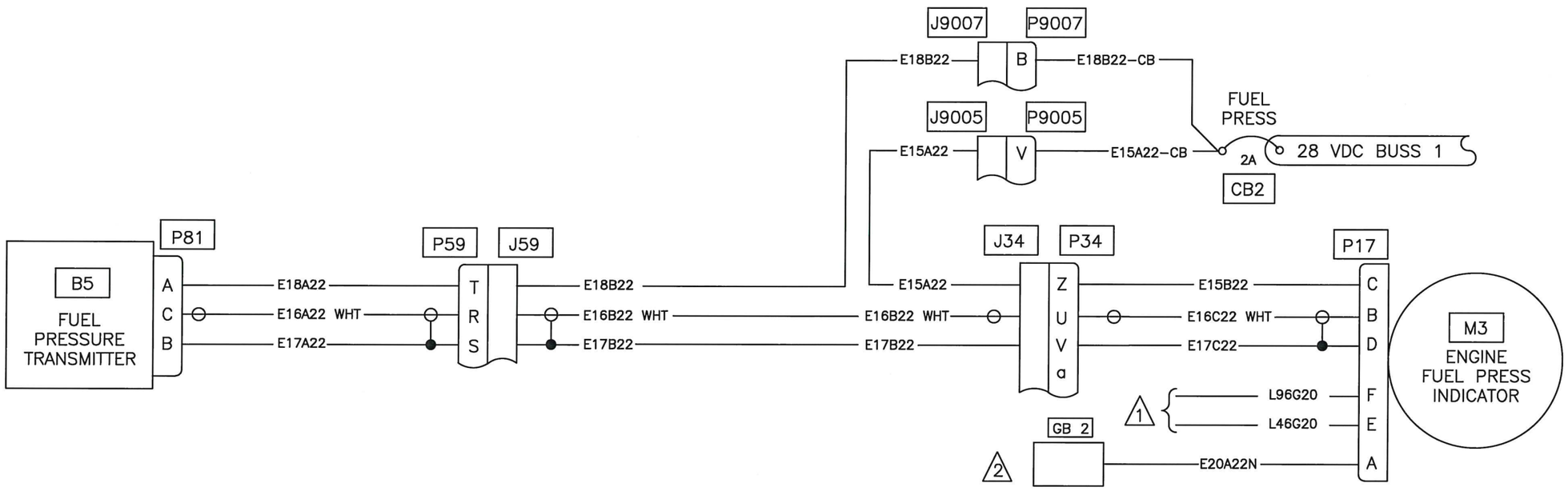

RELEASED
ECN 20-105
2020.04.20

NOTES:

1. REFER TO ENGINE INSTRUMENT LIGHTS
2. REFER TO COMPONENT REPLACEMENT

Figure 98–27S. ENGINE FUEL PRESSURE INDICATOR SYSTEM
(EFFECTIVE ON ALL S/N, EXCEPT 30687, 30931, 30576, 30817 & 30599)

DESIGN RD	DRAWN BY RD	DART	DART AEROSPACE LTD HAWKESBURY, ONTARIO, CANADA
CHECKED RD	APPROVED KB	DRAWING NO. D212–725–2–G2	REV. A SHEET 17 OF 57
DATE 08.11.24		TITLE FIGURE 98–27S	SCALE NTS

Copyright 2008 by DART AEROSPACE LTD

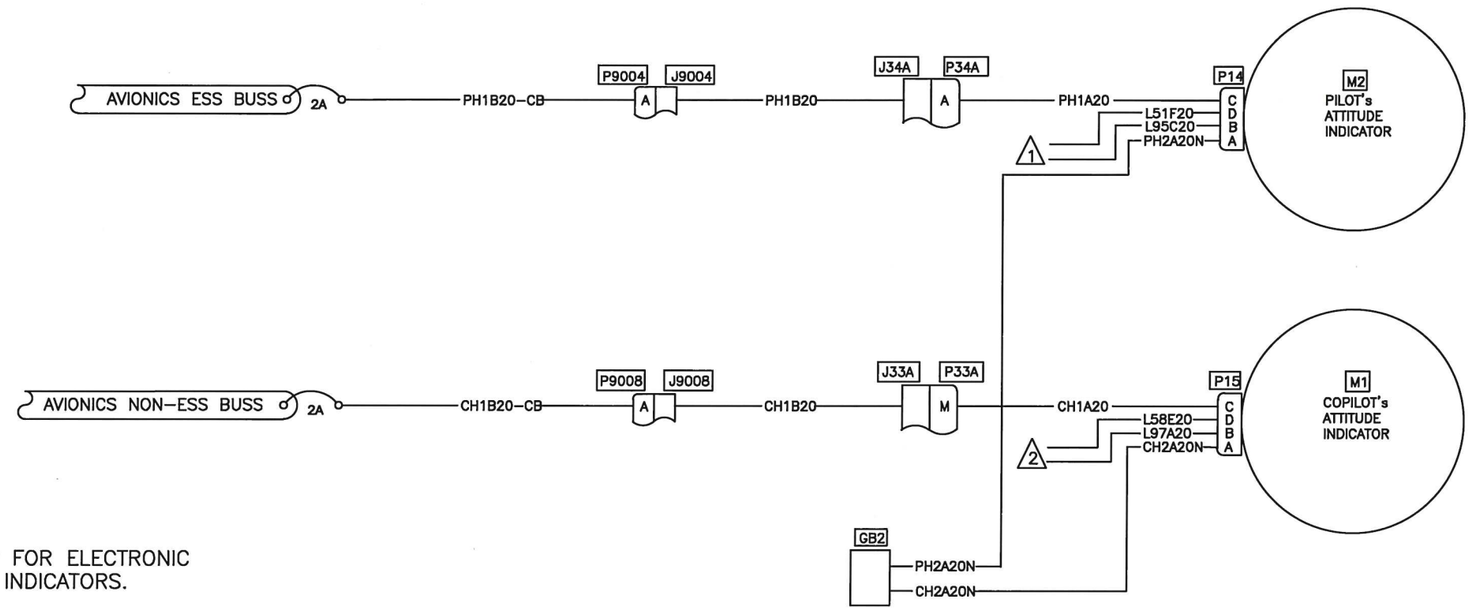

WIRING HOOKUP FOR ELECTRONIC ATTITUDE INDICATORS.

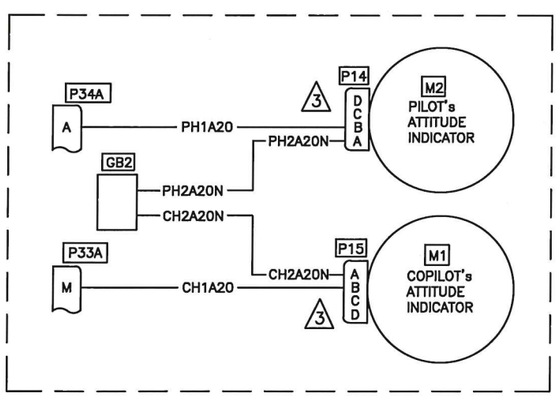

NOTES:

1. REFER TO PILOT's INSTRUMENT LIGHTING
2. REFER TO COPILOT's INSTRUMENT LIGHTING
3. LIGHTING NOT REQUIRED ON ELECTRONIC ATTITUDE INDICATORS.

RELEASED
ECN 20-105
2020.04.20

Figure 98-28S. PILOT AND COPILOT ATTITUDE INDICATORS
(EFFECTIVE ON ALL S/N, EXCEPT 30687, 30931, 30576, 30817 & 30599)

DESIGN	DRAWN BY	DART AEROSPACE LTD HAWKESBURY, ONTARIO, CANADA	
RD	RD		
CHECKED	APPROVED	DRAWING NO.	REV. B
RD	KB	D212-725-2-G2	SHEET 18 OF 57
DATE		TITLE	SCALE
10.08.10		FIGURE 98-28S	NTS

Copyright 2008 by DART AEROSPACE LTD

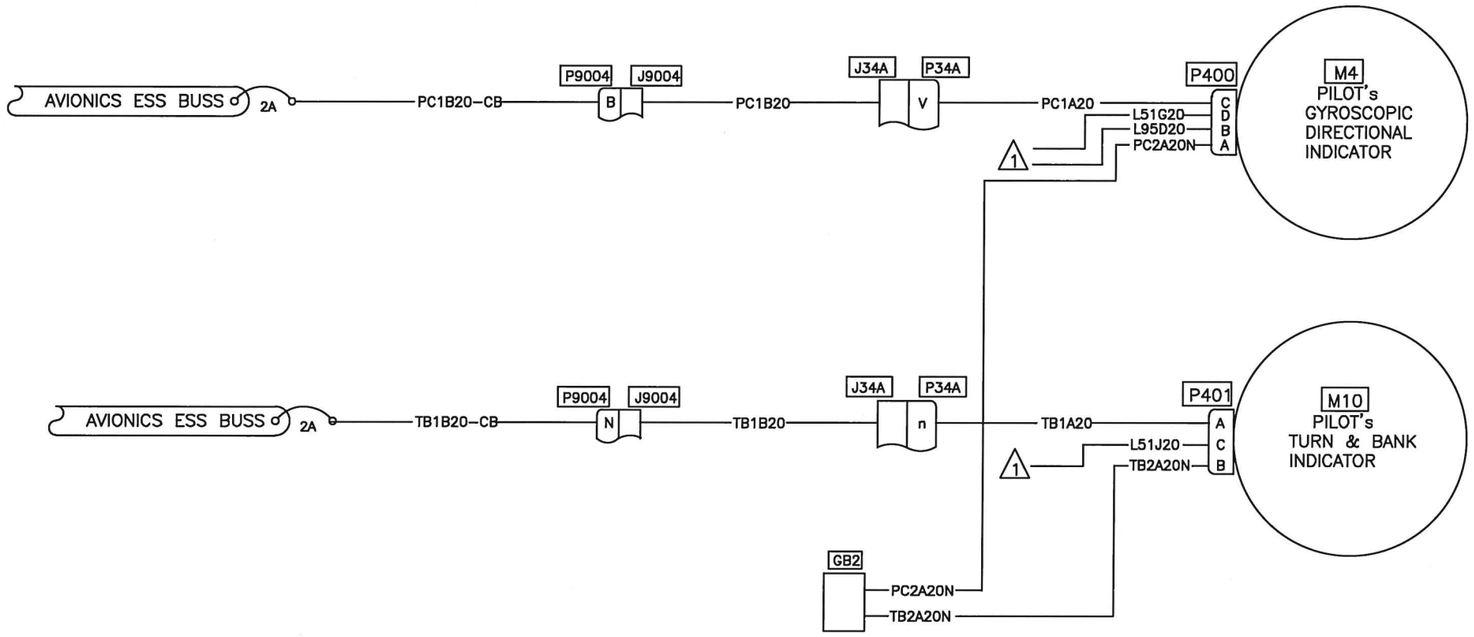

NOTES:

1. REFER TO PILOT's INSTRUMENT LIGHTING

RELEASED
ECN 20-105
2020.04.20

Figure 98-29S. PILOT'S TURN & BANK AND GYRO DIRECTIONAL INDICATORS
(EFFECTIVE ON ALL S/N, EXCEPT 30687, 30931, 30576, 30817 & 30599)

DESIGN RD	DRAWN BY RD	DART	DART AEROSPACE LTD HAWKESBURY, ONTARIO, CANADA
CHECKED RD	APPROVED KB	DRAWING NO. D212-725-2-G2	REV. A SHEET 19 OF 57
DATE 08.11.24		TITLE FIGURE 98-29S	SCALE NTS

Copyright 2008 by DART AEROSPACE LTD

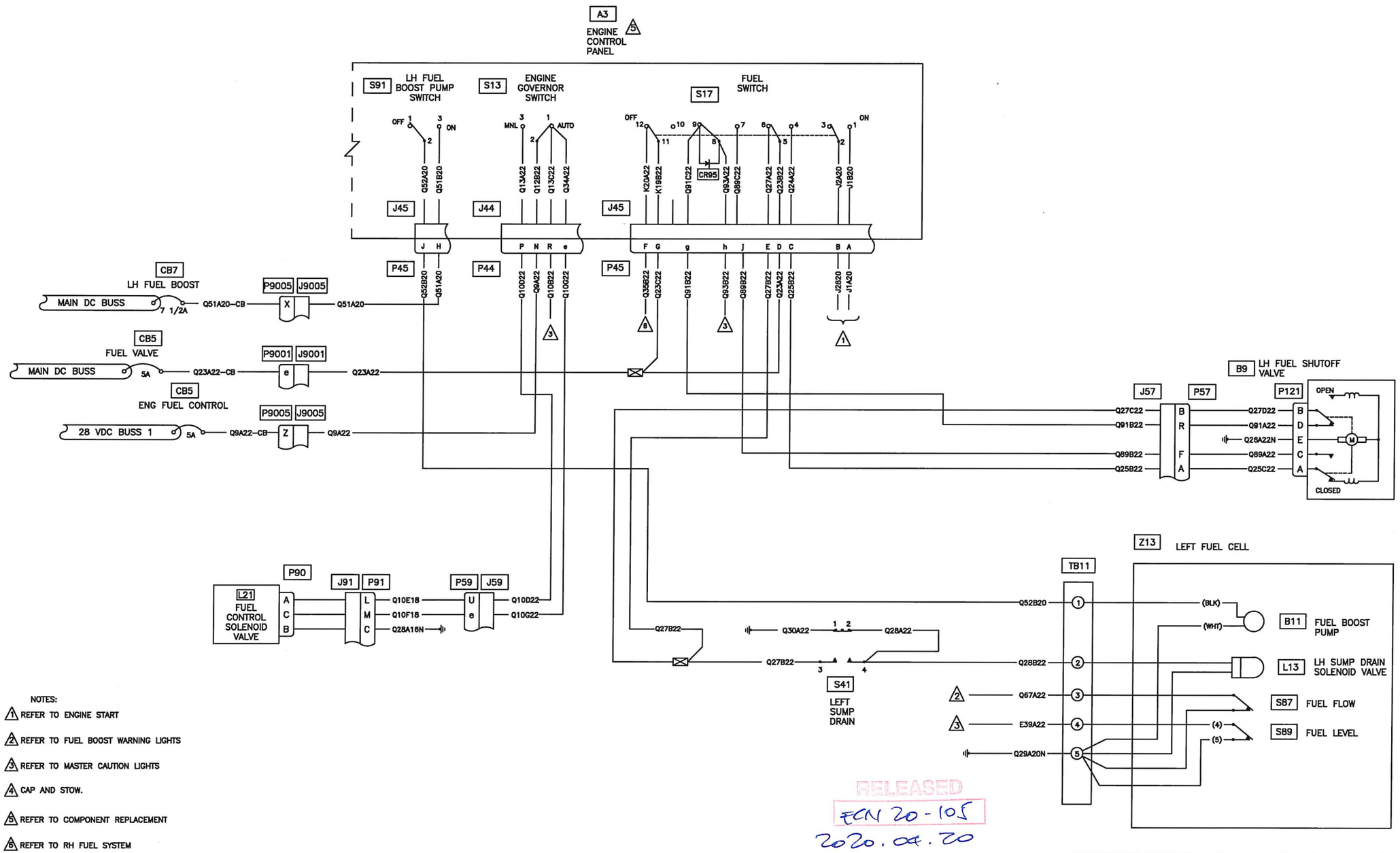

NOTES:

1. REFER TO ENGINE START
2. REFER TO FUEL BOOST WARNING LIGHTS
3. REFER TO MASTER CAUTION LIGHTS
4. CAP AND STOW.
5. REFER TO COMPONENT REPLACEMENT
6. REFER TO RH FUEL SYSTEM
7. INSERT JUMPER TO PREVENT MASTER CAUTION SEGMENT FROM ILLUMINATING.

RELEASED
ECN 20-105
2020.04.20

Figure 98-30S. LH FUEL SYSTEM
(EFFECTIVE ON ALL S/N, EXCEPT 30687, 30931, 30576, 30817 & 30599)

DESIGN RD	DRAWN BY RD	DART	DART AEROSPACE LTD HAWKESBURY, ONTARIO, CANADA
CHECKED RD	APPROVED KB	DRAWING NO. D212-725-2-G2	REV. B SHEET 20 OF 57
DATE 10.08.10		TITLE FIGURE 98-30S	SCALE NTS

Copyright 2008 by DART AEROSPACE LTD

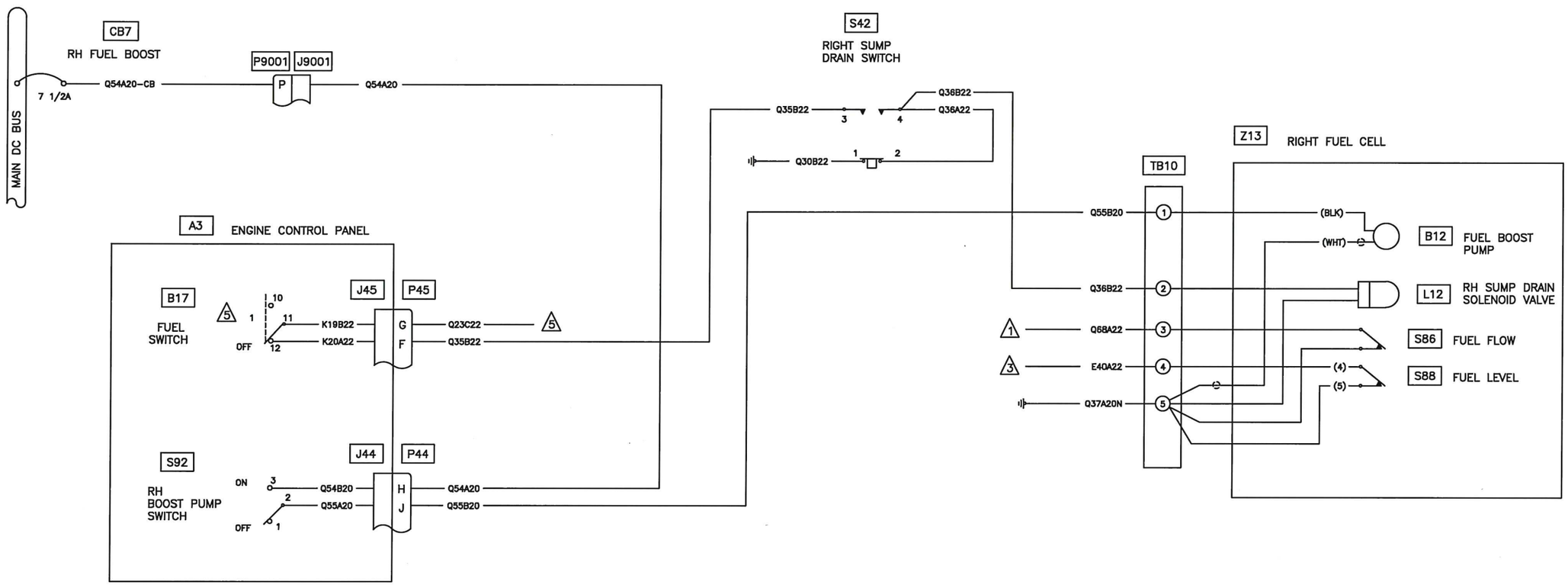

NOTES:

1. REFER TO FUEL BOOST WARNING LIGHTS
2. REFER TO ENGINE START
3. REFER TO MASTER CAUTION LIGHTS
4. DELETED
5. REFER TO LH FUEL SYSTEM

RELEASED
ECN 20-105
2020.04.20

Figure 98-31S. RH FUEL SYSTEM
(EFFECTIVE ON ALL S/N, EXCEPT 30687, 30931, 30576, 30817 & 30599)

DESIGN	DRAWN BY	DART AEROSPACE LTD HAWKESBURY, ONTARIO, CANADA	
RD	RD		
CHECKED	APPROVED	DRAWING NO.	REV. A
RD		D212-725-2-G2	SHEET 21 OF 57
DATE		TITLE	SCALE
08.11.24		FIGURE 98-31S	NTS

Copyright 2008 by DART AEROSPACE LTD

ENGINE CONTROL PANEL MODIFICATION

1. REMOVE GOVERNOR #1 SWITCH AND WIRING.
2. REMOVE PARTICLE SEPARATOR #2 SWITCH AND WIRING.
3. REMOVED RH FUEL VALVE SWITCH AND WIRING.
4. REMOVE FUEL X–FEED SWITCH AND WIRING. REMOVE DIODES FROM TB4 AND REMOVE RELAY.
5. REMOVE FUEL X–FEED TEST SWITCH AND WIRING.
6. MOVE LH FUEL VALVE SWITCH TO CENTER POSITION WHERE TEST SWITCH WAS.

GOVERNOR #2 SWITCH WIRING CHANGE

1. REMOVED WIRE Q34A22N FROM '1'
2. REMOVE DIODE FROM BETWEEN '1' & '2'
3. MOVE WIRES Q13C22 & Q13A22 FROM '2' TO '3'
4. MOVE WIRE Q12B22 FROM '3' TO '2'
5. ADD WIRE Q34A22 FROM '1' TO J44, PIN e.

FUEL VALVE SWITCH WIRING CHANGE

1. REMOVE WIRE K20A22 FROM 'NO' POSITION ON SECTION 1 OF SWITCH AND MOVE TO 'NC' POSITION. LEAVE WIRE IN J45, PIN F.

FUEL BOOST MASTER CAUTION WIRING CHANGE

1. REMOVE Q67B22 FROM TERMINAL 8 ON TB4 AND INSTALL ON TERMINAL 7 ALONG WITH Q79B22.
2. REMOVE Q68B22 FROM TERMINAL 5 ON TB4 AND INSTALL ON TERMINAL 4 ALONG WITH Q80B22.

ENGINE DE–ICE SWITCH WIRING CHANGE

1. INSTALL SWITCH (MS24523–22) IN OLD GOVERNOR #1 POSITION.
2. ADD WIRE H60C16 FROM '2' ON SWITCH TO J45, PIN L.
3. ADD WIRE H61C16 FROM '3' ON SWITCH TO J45, PIN M.

7 START FUEL SWITCH (POST S.T.C.)

1. REMOVE WIRES K31D22, K50B22, AND K10A22 FROM SWITCH. CAP AND STOW WIRES.

FUEL INTCON SWITCH WIRING CHANGE

1. REMOVE EXISTING FUEL INTCON SWITCH.
2. INSTALL WIRES AS PER DIAGRAM.

A3

ENGINE CONTROL PANEL (MODIFIED)

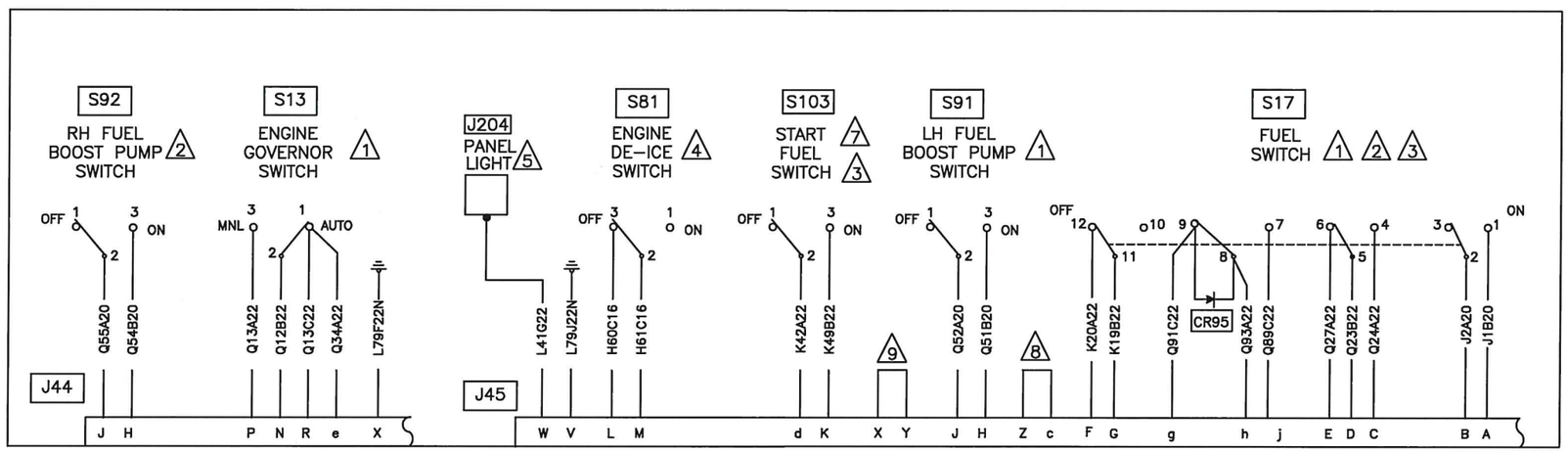

NOTES:

1. REFER TO WIRING DIAGRAM 98–30
2. REFER TO WIRING DIAGRAM 98–31
3. REFER TO WIRING DIAGRAM 98–14
4. REFER TO WIRING DIAGRAM 98–65
5. REFER TO WIRING DIAGRAM 98–39
6. DELETED
7. SWITCH INSTALLED AS PER START FUEL STC.
8. REFER TO WIRING DIAGRAM 98–38, Sheet 1
9. REFER TO WIRING DIAGRAM 98–38, Sheet 3

RELEASED
ECN 20-105
2020.04.20

FIG. 98–32S ENGINE CONTROL PANEL(Modified)
(EFFECTIVE ON ALL S/N, EXCEPT 30687, 30931, 30576, 30817 & 30599)

DESIGN	DRAWN BY	DART AEROSPACE LTD HAWKESBURY, ONTARIO, CANADA	
RD	RD		
CHECKED	APPROVED	DRAWING NO.	REV. A
RD		D212–725–2–G2	SHEET 22 OF 57
DATE		TITLE	SCALE
08.11.24		FIGURE 98–32S	NTS

Copyright 2008 by DART AEROSPACE LTD

NOTES:

1. REFER TO ENGINE INSTRUMENT LIGHTS

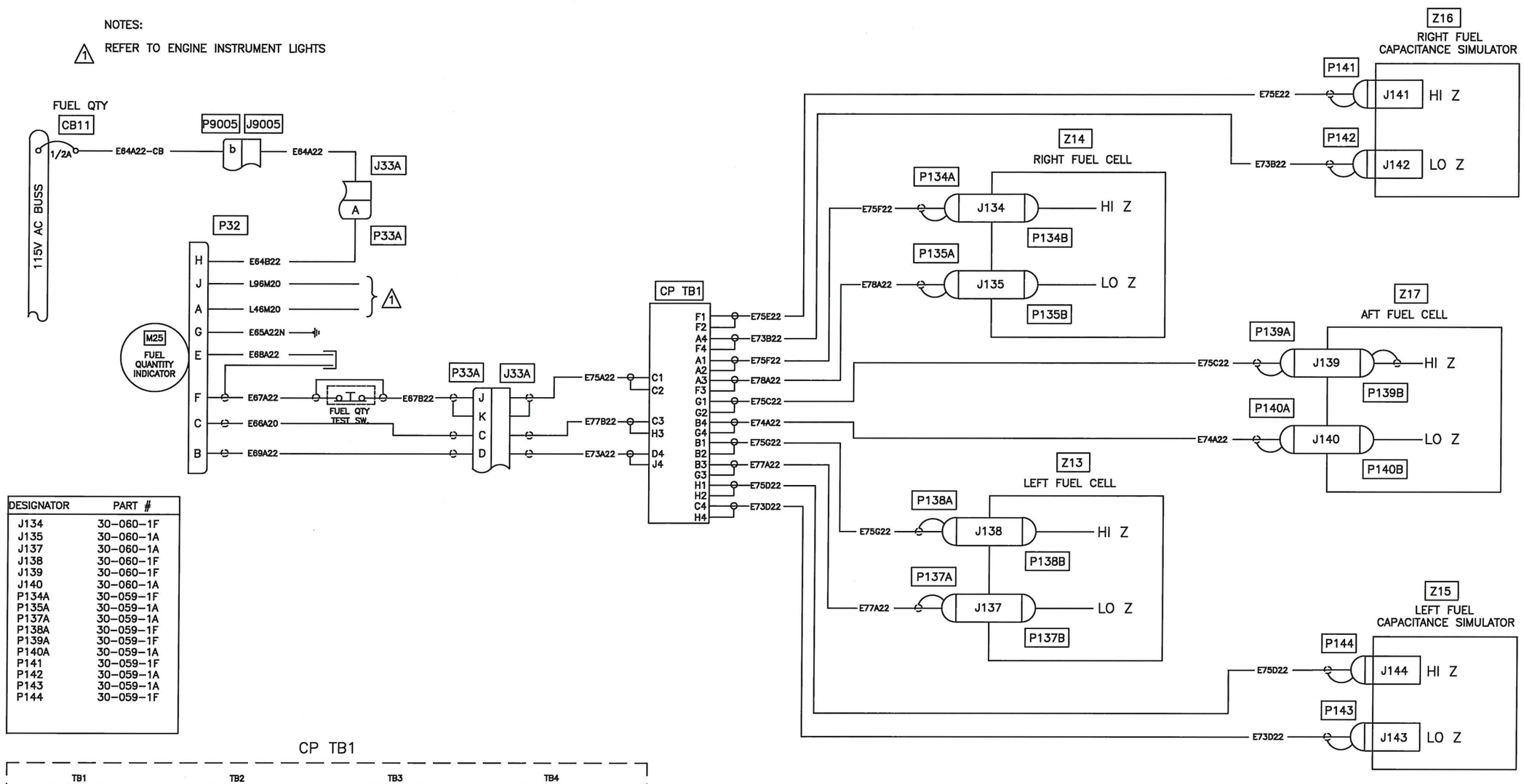

DESIGNATOR	PART #
J134	30-060-1F
J135	30-060-1A
J137	30-060-1A
J138	30-060-1F
J139	30-060-1F
J140	30-060-1A
P134A	30-059-1F
P135A	30-059-1A
P137A	30-059-1A
P138A	30-059-1F
P139A	30-059-1F
P140A	30-059-1A
P141	30-059-1F
P142	30-059-1A
P143	30-059-1A
P144	30-059-1F

CP TB1

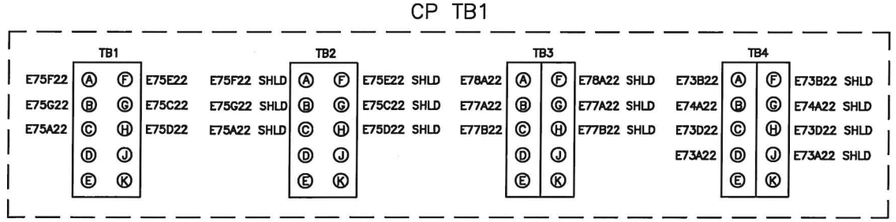

RELEASED
ECN 20-105
2020.04.20

Figure 98-33S. FUEL QUANTITY INDICATION SYSTEM
(EFFECTIVE ON ALL S/N, EXCEPT 30687, 30931, 30576, 30817 & 30599)

DESIGN	DRAWN BY	DART AEROSPACE LTD HAWKESBURY, ONTARIO, CANADA	
RD	RD		
CHECKED	APPROVED	DRAWING NO.	REV. B
RD		D212-725-2-G2	SHEET 23 OF 57
DATE		TITLE	SCALE
10.08.10		FIGURE 98-33S	NTS

Copyright 2008 by DART AEROSPACE LTD

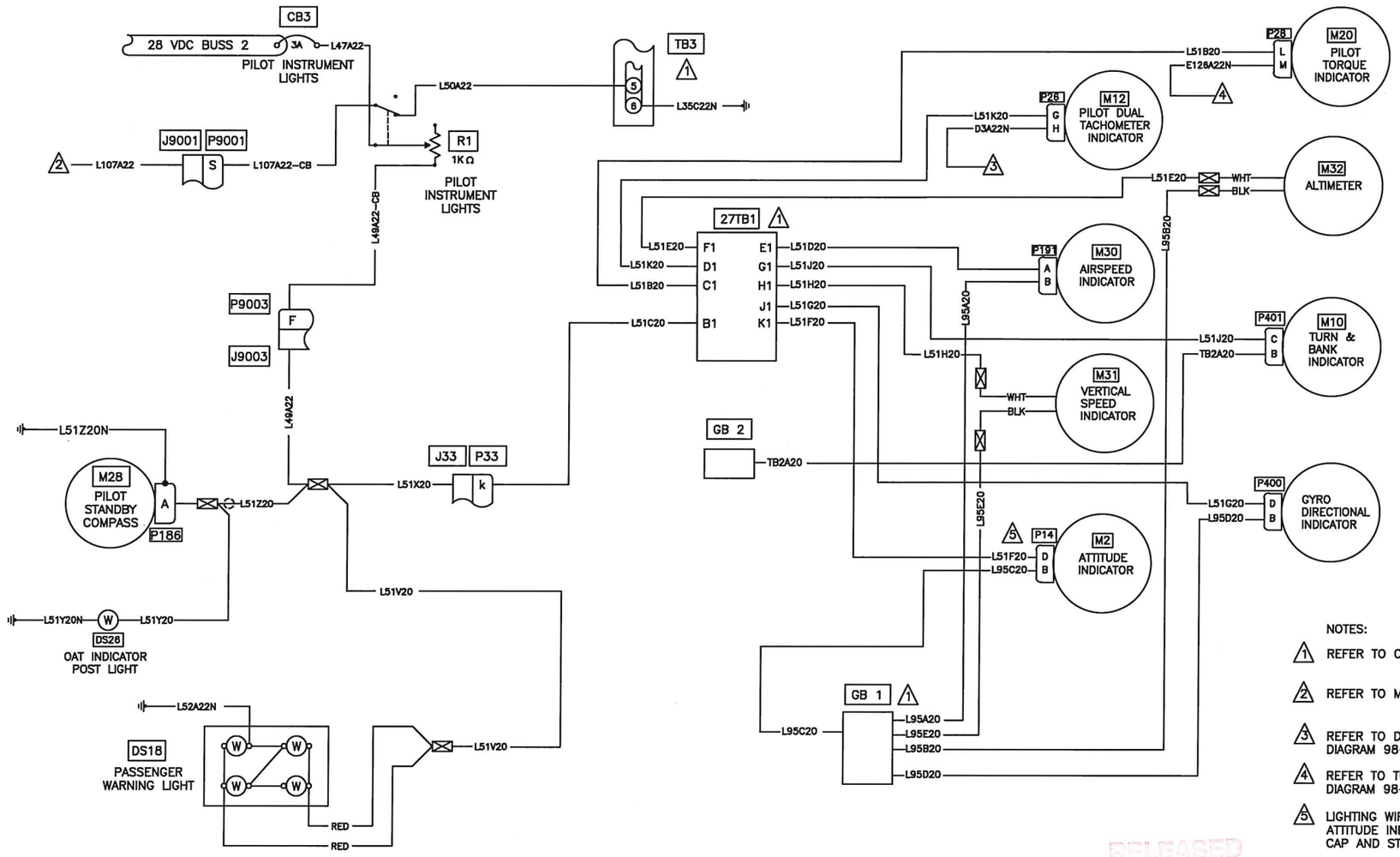

NOTES:

1. REFER TO COMPONENT REPLACEMENT
2. REFER TO MASTER CAUTION LIGHTS
3. REFER TO DUAL TACHOMETER WIRING DIAGRAM 98–22S.
4. REFER TO TORQUE INDICATOR WIRING DIAGRAM 98–24S.
5. LIGHTING WIRING NOT REQUIRED IF ELECTRONIC ATTITUDE INDICATOR INSTALLED. CAP AND STOW IF PREVIOUSLY INSTALLED.

RELEASED
ECN 20-105
2020.04.20

Figure 98–34S. PILOT INSTRUMENT LIGHTS
(EFFECTIVE ON ALL S/N, EXCEPT 30687, 30931, 30576, 30817 & 30599)

DESIGN	DRAWN BY	DART AEROSPACE LTD HAWKESBURY, ONTARIO, CANADA	
RD	RD		
CHECKED	APPROVED	DRAWING NO.	REV. B
RD	KB	D212–725–2–G2	SHEET 24 OF 57
DATE		TITLE	SCALE
10.08.10		FIGURE 98–34S	NTS

Copyright 2008 by DART AEROSPACE LTD

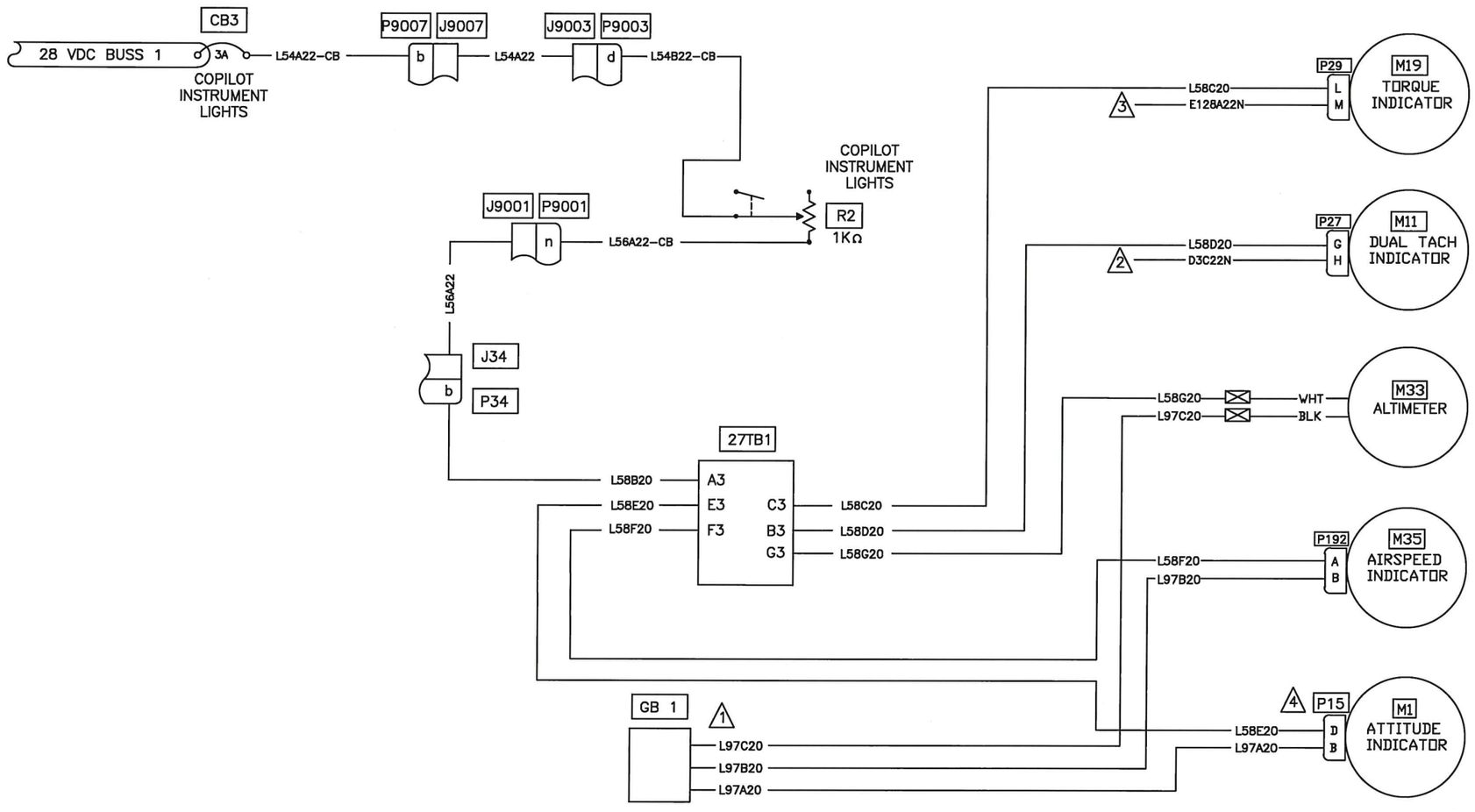

NOTES:

1. REFER TO COMPONENT REPLACEMENT
2. REFER TO DUAL TACHOMETER WIRING DIAGRAM 98–22S.
3. REFER TO TORQUE INDICATOR WIRING DIAGRAM 98–24S.
4. LIGHTING WIRING NOT REQUIRED IF ELECTRONIC ATTITUDE INDICATOR INSTALLED. CAP AND STOW IF PREVIOUSLY INSTALLED.

RELEASED
ECN 20-105
2020.09.20

Figure 98–35S. COPILOT INSTRUMENT LIGHTS
(EFFECTIVE ON ALL S/N, EXCEPT 30687, 30931, 30576, 30817 & 30599)

DESIGN	DRAWN BY	DART AEROSPACE LTD HAWKESBURY, ONTARIO, CANADA	
RD	RD		
CHECKED	APPROVED	DRAWING NO.	REV. B
RD	KB	D212–725–2–G2	SHEET 25 OF 57
DATE		TITLE	SCALE
10.08.10		FIGURE 98–35S	NTS

Copyright 2008 by DART AEROSPACE LTD

NOTES:

1. REFER TO COMPONENT REPLACEMENT
2. REFER TO FIGURE 98–23S FOR ADDITIONAL HOOKUPS TO THIS WIRE.

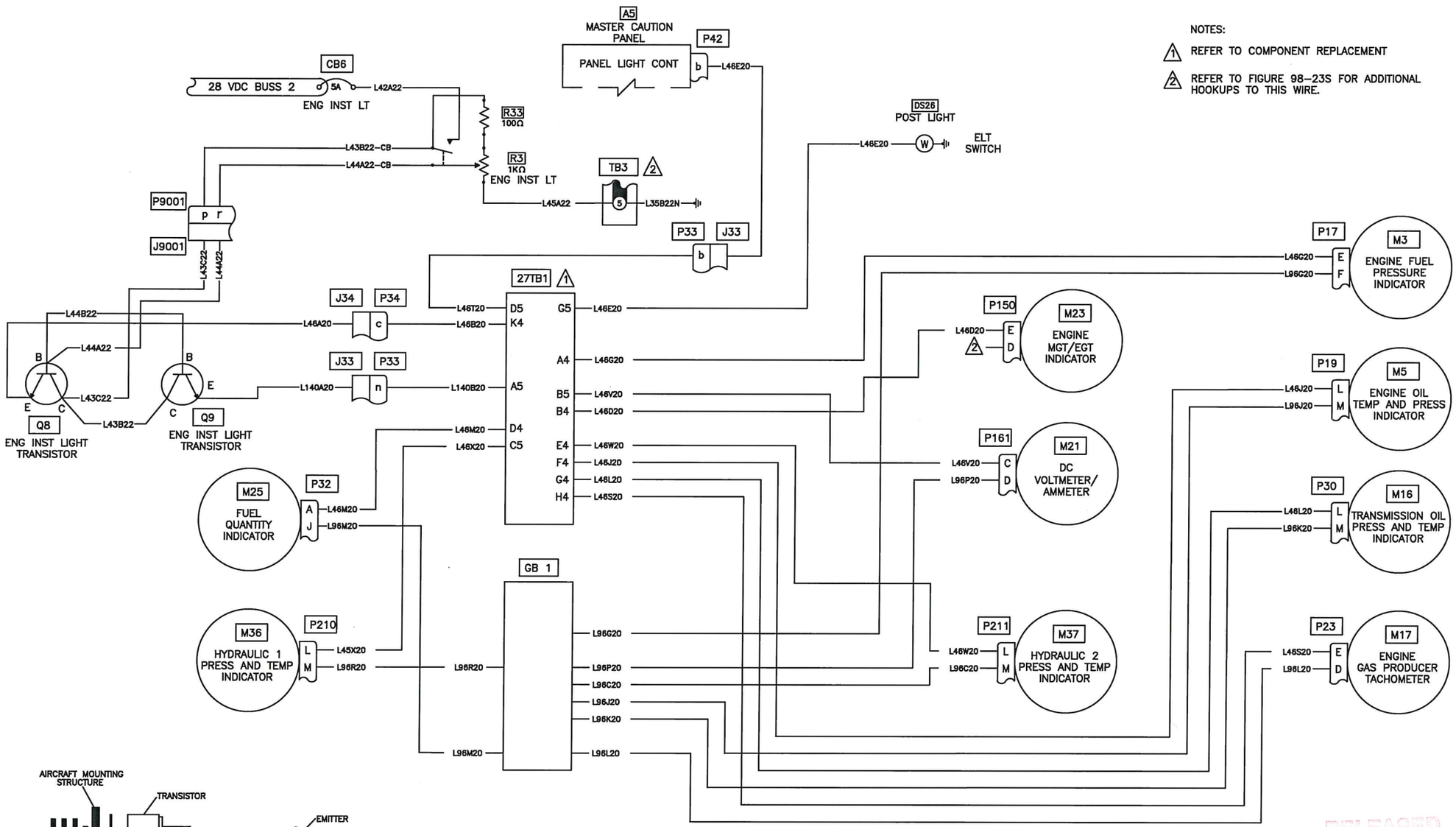

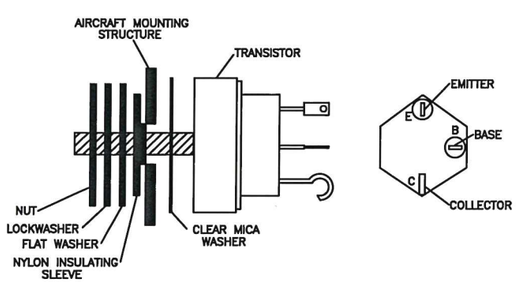

TRANSISTOR INSTALLATION STACK UP

Figure 98–36S. ENGINE INSTRUMENT LIGHTS
(EFFECTIVE ON ALL S/N, EXCEPT 30687, 30931, 30576, 30817 & 30599)

RELEASED
ECN 20-105
2020.04.20

DESIGN	DRAWN BY	DART AEROSPACE LTD HAWKESBURY, ONTARIO, CANADA	
RD	RD		
CHECKED	APPROVED	DRAWING NO.	REV. B
RD	KB	D212–725–2–G2	SHEET 26 OF 57
DATE		TITLE	SCALE
10.08.10		FIGURE 98–36S	NTS

Copyright 2008 by DART AEROSPACE LTD

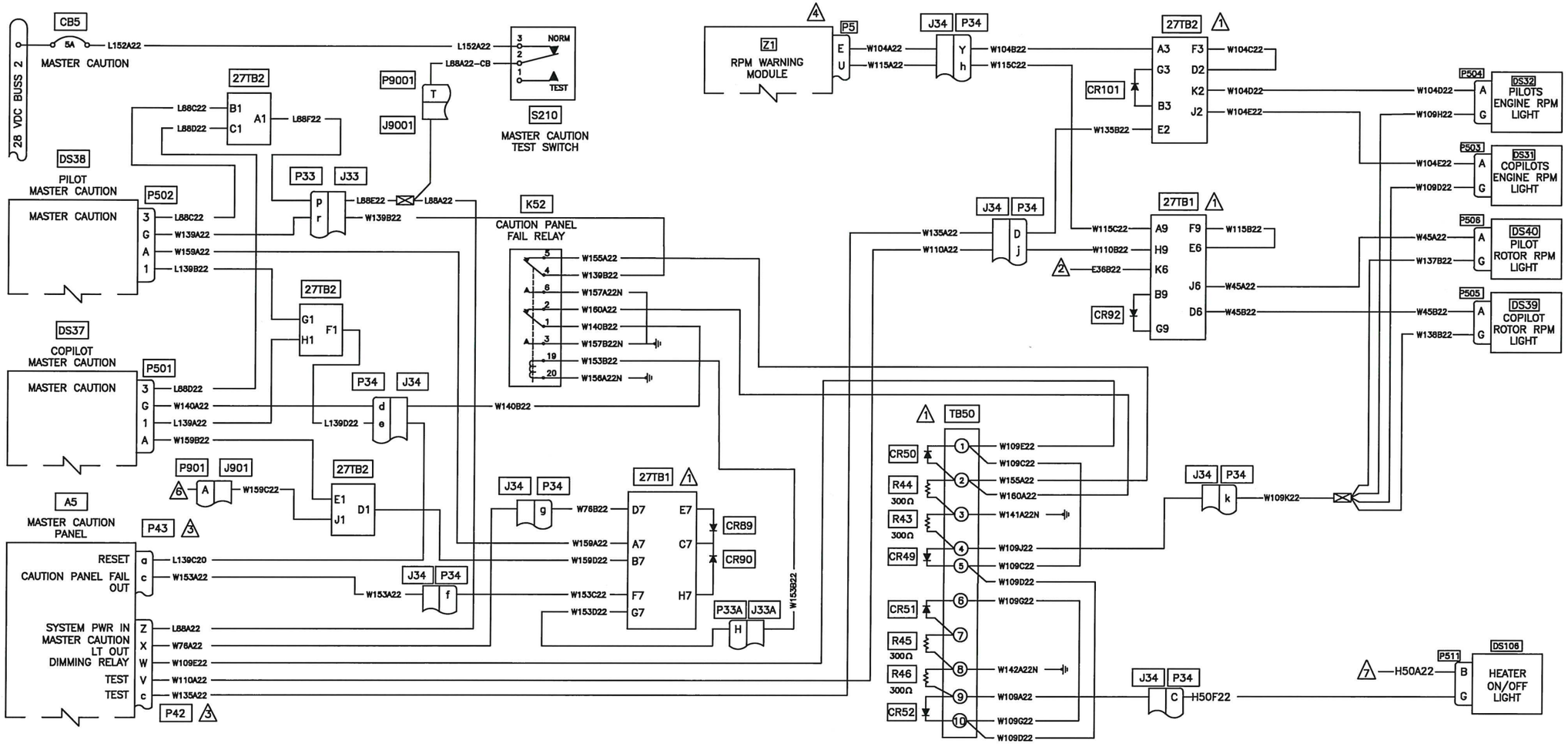

NOTES:

1. REFER TO COMPONENT REPLACEMENT
2. REFER TO HOURMETER
3. REFER TO MASTER CAUTION LIGHTS 98-3BS, SHEET 5
4. REFER TO RPM LIMIT WARNING
5. REFER TO FLIGHT DATA RECORDER
6. REFER TO VERTICAL REFERENCE DOOR WIRING DIAGRAM IF DOOR INSTALLED
7. REFER TO HEATER SYSTEM DIAGRAM

RELEASED
ECN 20-105
2020.04.20

Figure 98-37S. MASTER CAUTION AND RPM CAUTION LIGHTS
(EFFECTIVE ON ALL S/N, EXCEPT 30687, 30931, 30576, 30817 & 30599)

DESIGN	DRAWN BY	DART AEROSPACE LTD HAWKESBURY, ONTARIO, CANADA	
RD	RD		
CHECKED	APPROVED	DRAWING NO.	REV. B
RD	KP	D212-725-2-G2	SHEET 27 OF 57
DATE		TITLE	SCALE
10.08.10		FIGURE 98-37S	NTS

Copyright 2008 by DART AEROSPACE LTD

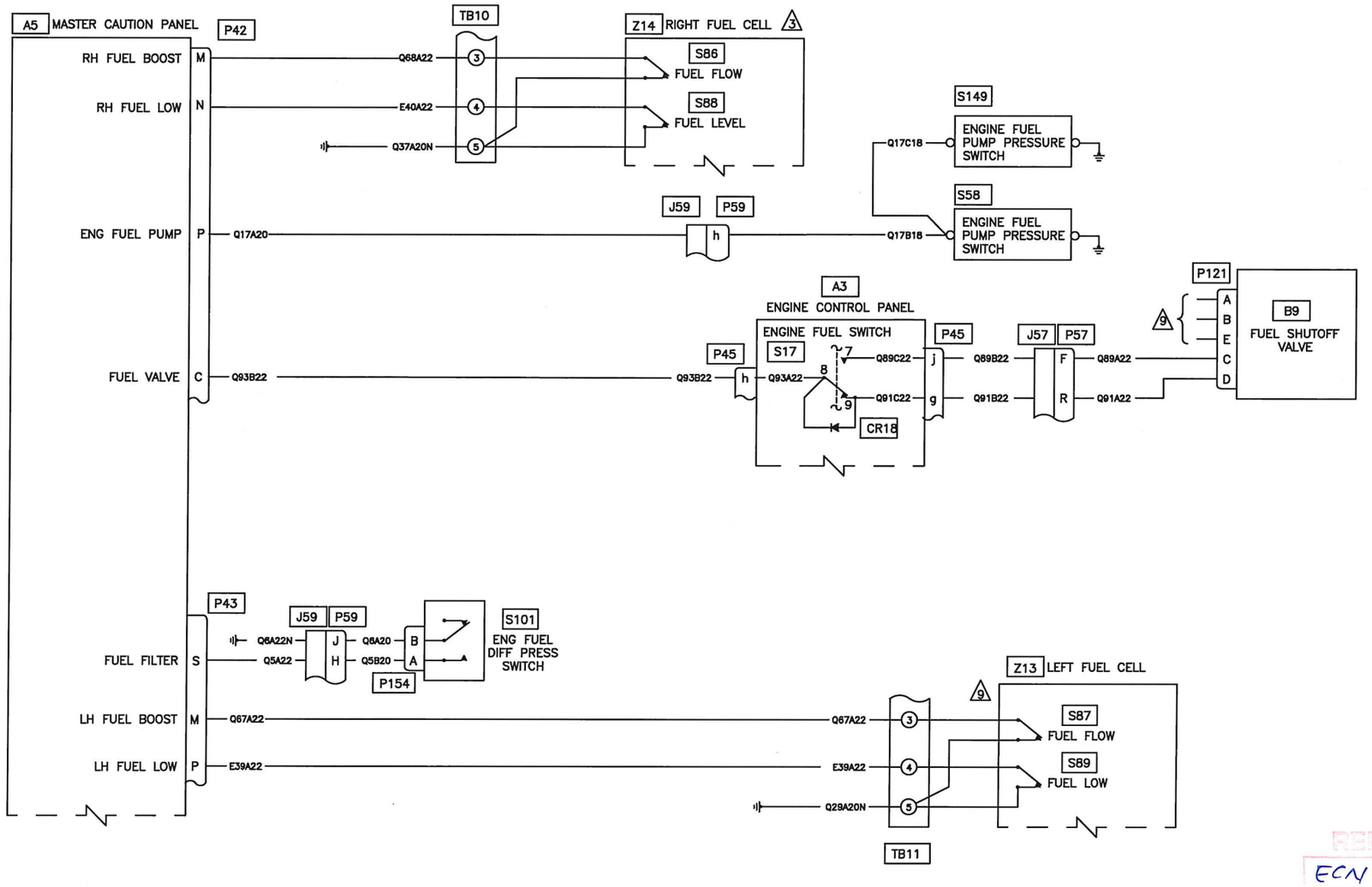

RELEASED
ECN 20-105
2020.04.20

Figure 98–38S. MASTER CAUTION LIGHTS (Sheet 1 of 5)
(EFFECTIVE ON ALL S/N, EXCEPT 30687, 30931, 30576, 30817 & 30599)

DESIGN	DRAWN BY	DART AEROSPACE LTD HAWKESBURY, ONTARIO, CANADA	
RD	RD		
CHECKED	APPROVED	DRAWING NO.	REV. B
RD	KB	D212–725–2–G2	SHEET 28 OF 57
DATE		TITLE	SCALE
10.08.10		FIGURE 98–38S SHEET 1 OF 5	NTS

Copyright 2008 by DART AEROSPACE LTD

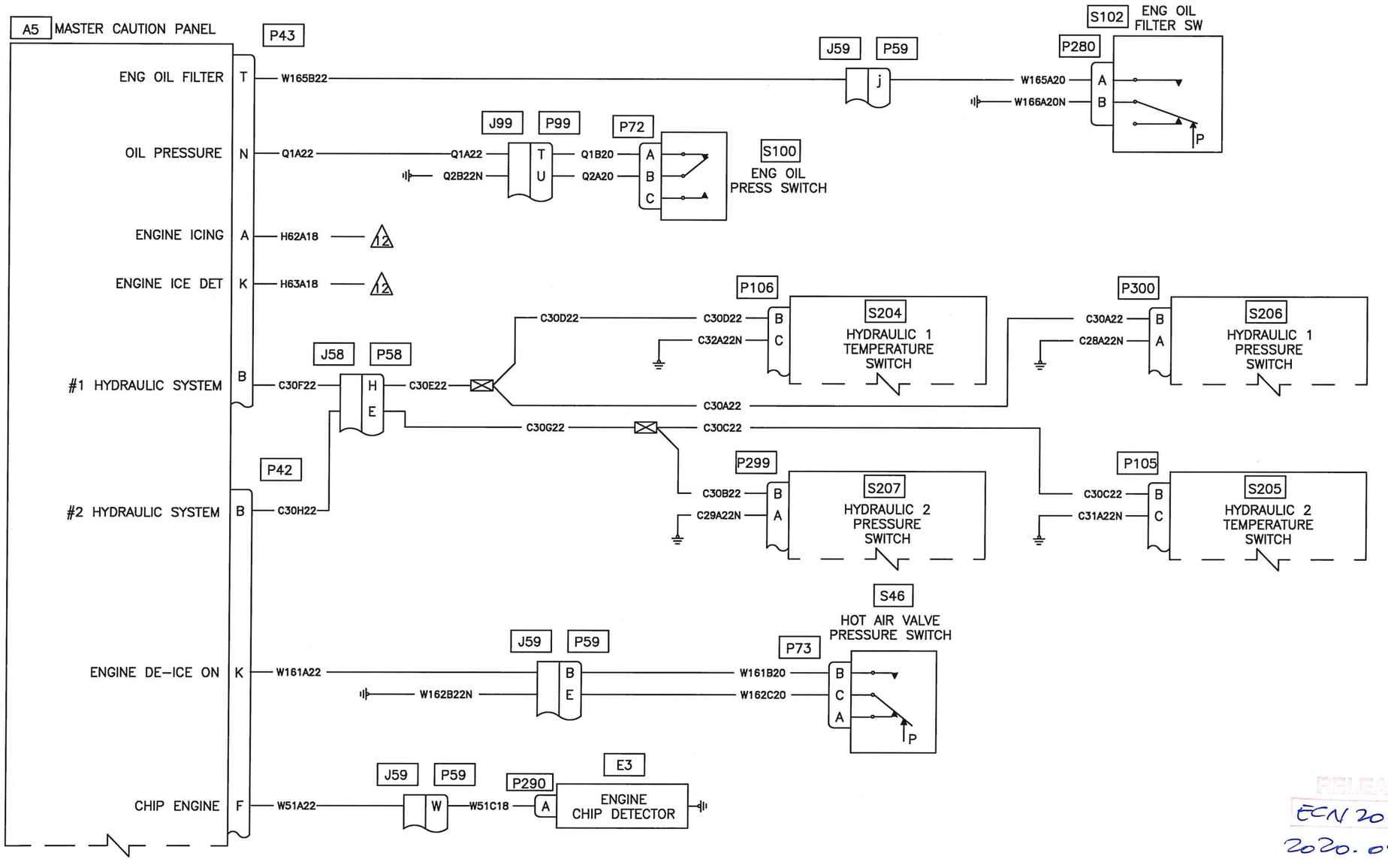

RELEASED
ECN 20-105
2020.04.20

Figure 98-38S. MASTER CAUTION LIGHTS (Sheet 2 of 5)
(EFFECTIVE ON ALL S/N, EXCEPT 30687, 30931, 30576, 30817 & 30599)

DESIGN	DRAWN BY	DART AEROSPACE LTD HAWKESBURY, ONTARIO, CANADA	
RD	RD		
CHECKED	APPROVED	DRAWING NO.	REV. A
RD	KB	D212-725-2-G2	SHEET 29 OF 57
DATE		TITLE	SCALE
08.11.24		FIGURE 98-38S SHEET 2 OF 5	NTS

Copyright 2008 by DART AEROSPACE LTD

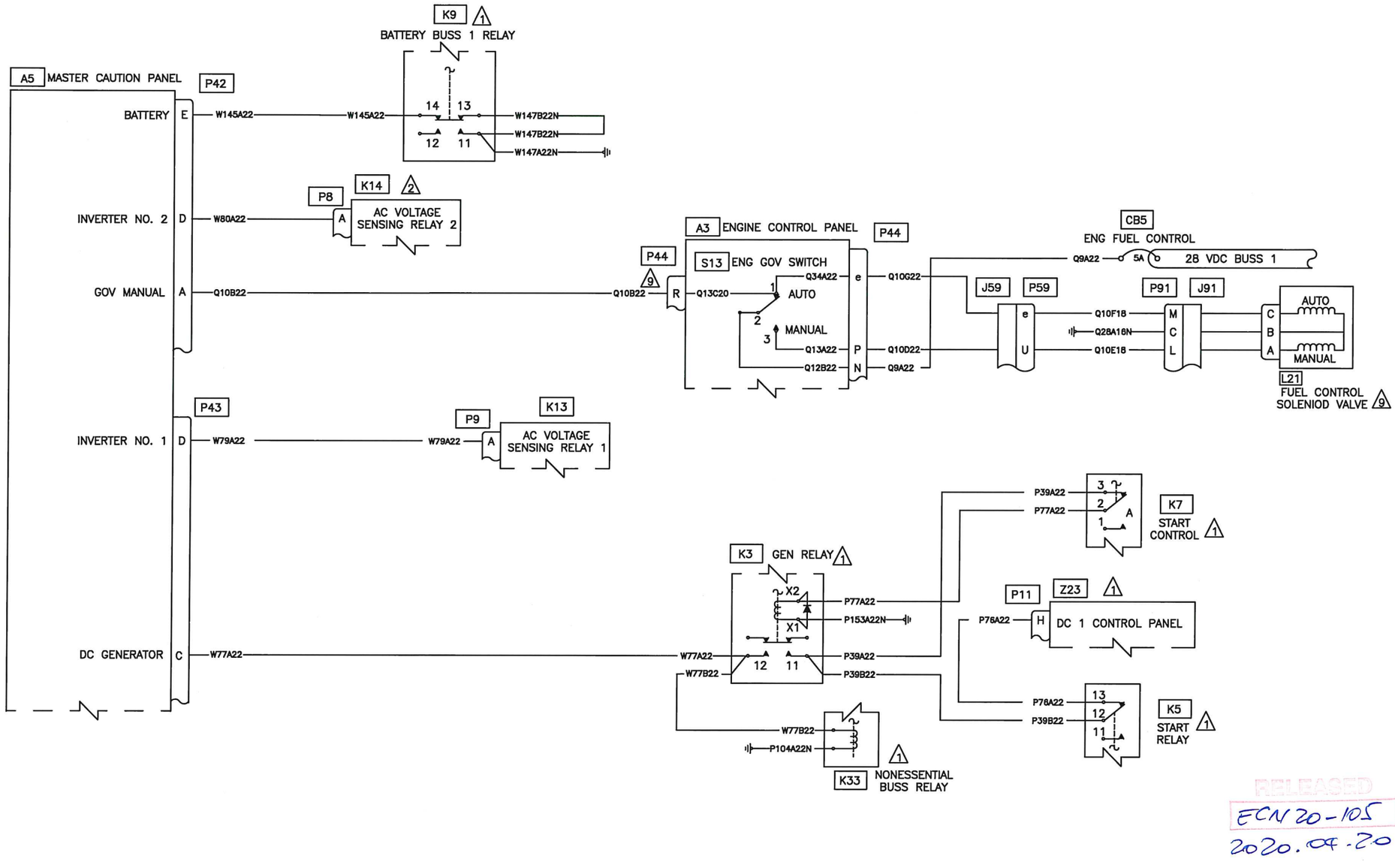

RELEASED
ECN 20-105
2020.04.20

Figure 98–38S. MASTER CAUTION LIGHTS (Sheet 3 of 5)
(EFFECTIVE ON ALL S/N, EXCEPT 30687, 30931, 30576, 30817 & 30599)

DESIGN	DRAWN BY	DART AEROSPACE LTD HAWKESBURY, ONTARIO, CANADA	
RD	RD		
CHECKED	APPROVED	DRAWING NO.	REV. A
RD		D212–725–2–G2	SHEET 30 OF 57
DATE		TITLE	SCALE
08.11.24		FIGURE 98–38S SHEET 3 OF 5	NTS

Copyright 2008 by DART AEROSPACE LTD

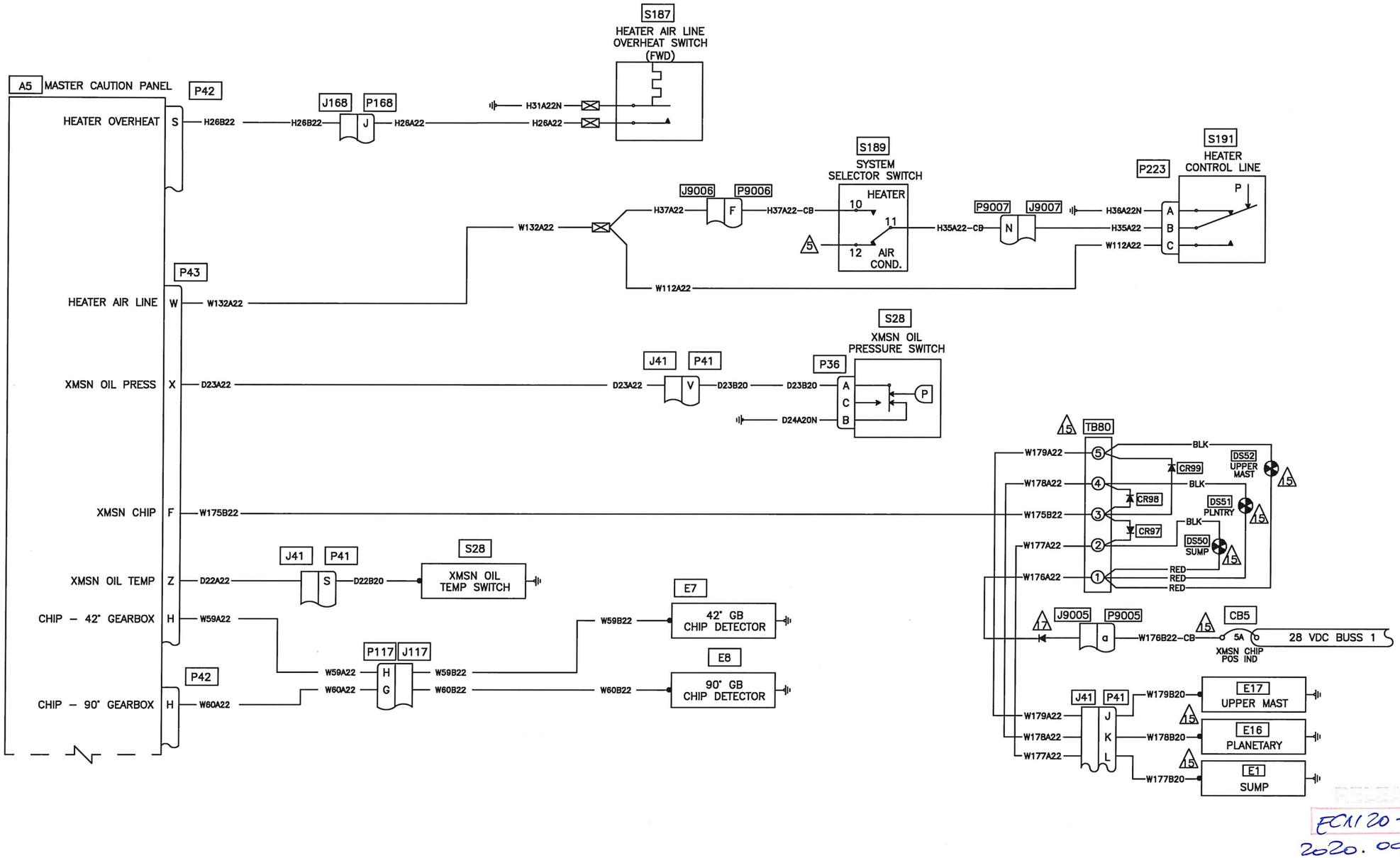

RELEASED
ECN 20-105
2020.04.20

Figure 98–38S. MASTER CAUTION LIGHTS (Sheet 4 of 5)
(EFFECTIVE ON ALL S/N, EXCEPT 30687, 30931, 30576, 30817 & 30599)

DESIGN: RD	DRAWN BY: KB	DART AEROSPACE LTD, HAWKESBURY, ONTARIO, CANADA
CHECKED: LJ / HS	APPROVED: KB	DRAWING NO. D212-725-2-G2 — REV. C — SHEET 31 OF 57
DATE: 17.10.25		TITLE: FIGURE 98–38S SHEET 4 OF 5 — SCALE: NTS

Copyright 2008 by DART AEROSPACE LTD

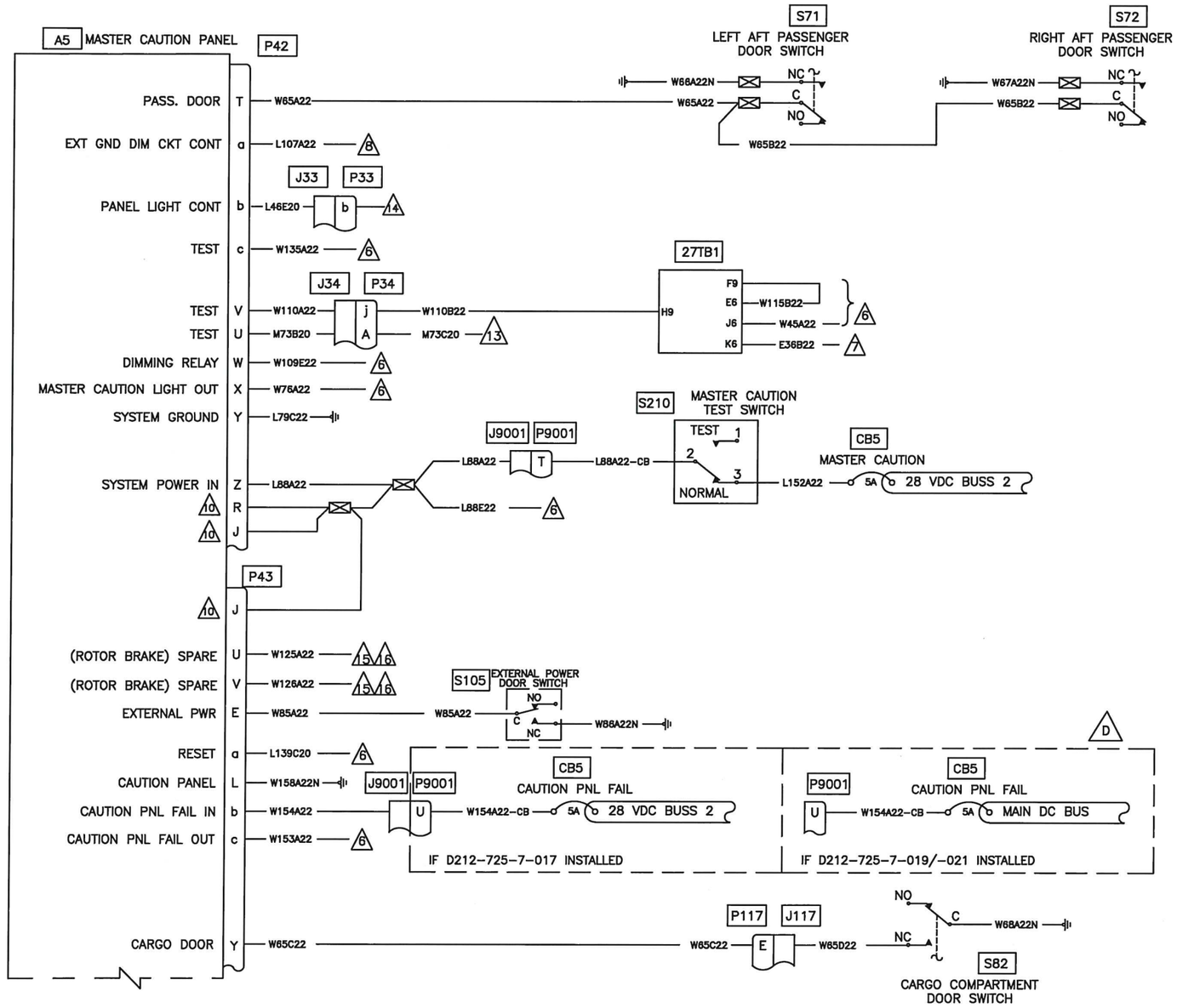

NOTES:

1. REFER TO GENERATOR 1
2. REFER TO AC POWER SYSTEM
3. REFER TO RH FUEL SYSTEM
4. REFER TO FUEL CROSSFEED
5. REFER TO HEATER/AIR CONDITIONING
6. REFER TO MASTER CAUTION AND RPM CAUTION LIGHTS
7. REFER TO HOURMETER
8. REFER TO PILOT INSTRUMENT LIGHTS
9. REFER TO LH FUEL SYSTEM
10. 28VDC INPUT REQUIRED TO TURN LIGHT OFF ON BLANK SEGMENT.
11. CAP AND STOW.
12. REFER TO ENGINE ANT-ICING
13. REFER TO CARGO RELEASE SYSTEM
14. REFER TO ENGINE INSTRUMENT LIGHTS
15. IF INSTALLED
16. REFER TO ROTOR BREAK FIGURE 1-7 IN BHT-212-SI-6
17. USE DIODE P/N: 10A02-T OR EQUIVALENT

RELEASED
ECN 20-105
2020.04.20

Figure 98-38S. MASTER CAUTION LIGHTS (Sheet 5 of 5)
(EFFECTIVE ON ALL S/N, EXCEPT 30687, 30931, 30576, 30817 & 30599)

DESIGN	DRAWN BY	DART AEROSPACE LTD HAWKESBURY, ONTARIO, CANADA	
RD	WK		
CHECKED	APPROVED	DRAWING NO.	REV. D
KB	KB	D212-725-2-G2	SHEET 32 OF 57
DATE		TITLE	SCALE
20.03.20		FIGURE 98-38S SHEET 5 OF 5	NTS

Copyright 2008 by DART AEROSPACE LTD

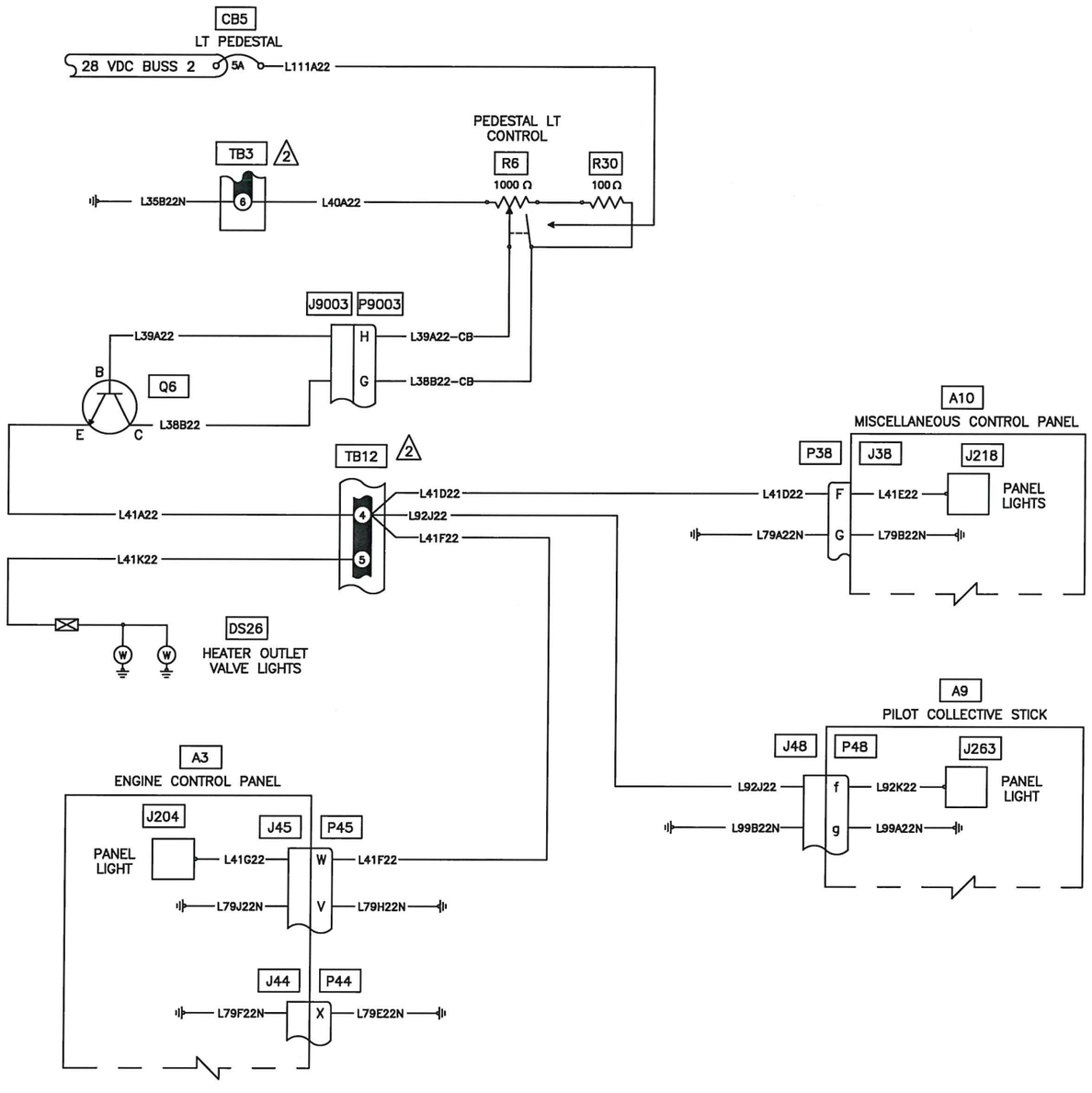

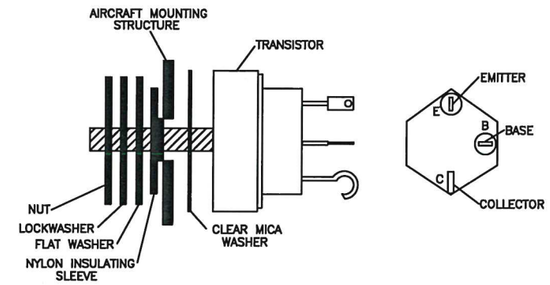

TRANSISTOR INSTALLATION STACK UP

NOTES:

1. REFER TO AFCS POWER LIGHTING
2. REFER TO COMPONENT REPLACEMENT

RELEASED
ECN 20-105
2020.04.20

Figure 98-39S. PEDESTAL LIGHTS
(EFFECTIVE ON ALL S/N, EXCEPT 30687, 30931, 30576, 30817 & 30599)

DESIGN	DRAWN BY	DART AEROSPACE LTD HAWKESBURY, ONTARIO, CANADA	
RD	RD		
CHECKED	APPROVED	DRAWING NO.	REV. A
RD	KB	D212-725-2-G2	SHEET 33 OF 57
DATE		TITLE	SCALE
08.11.24		FIGURE 98-39S	NTS

Copyright 2008 by DART AEROSPACE LTD

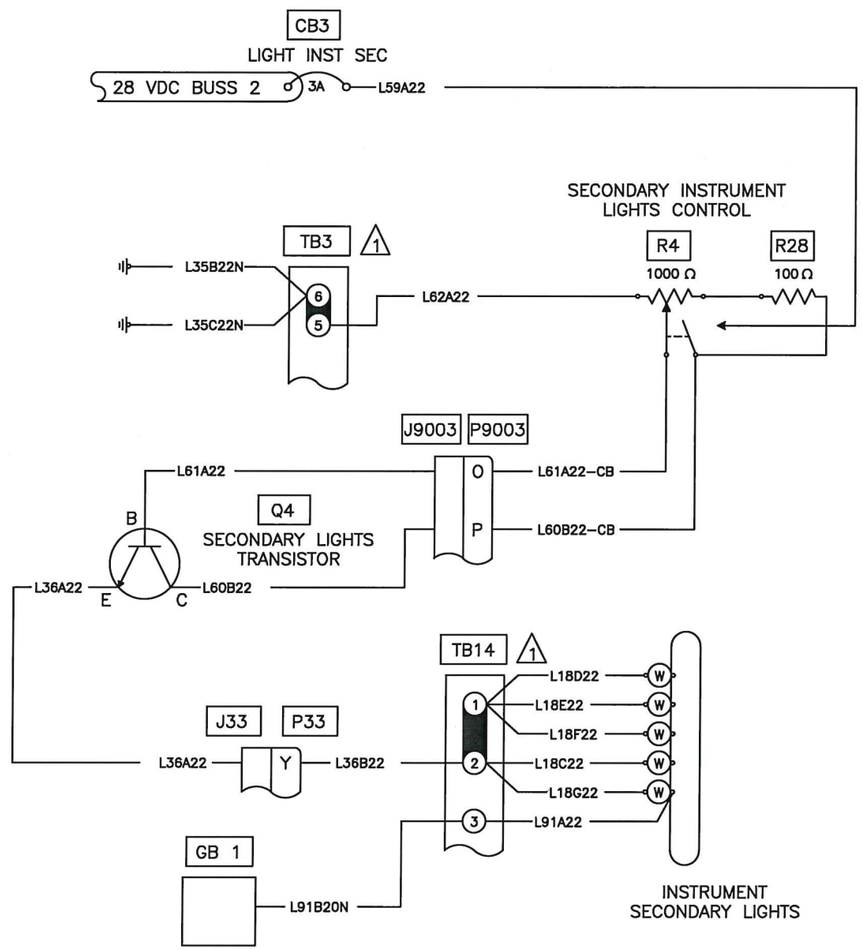

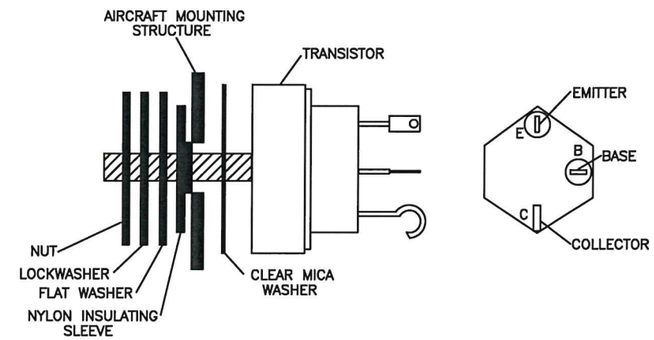

TRANSISTOR INSTALLATION STACK UP

NOTES:

1. REFER TO COMPONENT REPLACEMENT

RELEASED
ECN 20-105
2020.04.20

Figure 98–40S. SECONDARY LIGHTS
(EFFECTIVE ON ALL S/N, EXCEPT 30687, 30931, 30576, 30817 & 30599)

DESIGN	DRAWN BY	DART AEROSPACE LTD HAWKESBURY, ONTARIO, CANADA	
RD	RD		
CHECKED	APPROVED	DRAWING NO.	REV. A
RD		D212–725–2–G2	SHEET 34 OF 57
DATE		TITLE	SCALE
08.11.24		FIGURE 98–40S	NTS

Copyright 2008 by DART AEROSPACE LTD

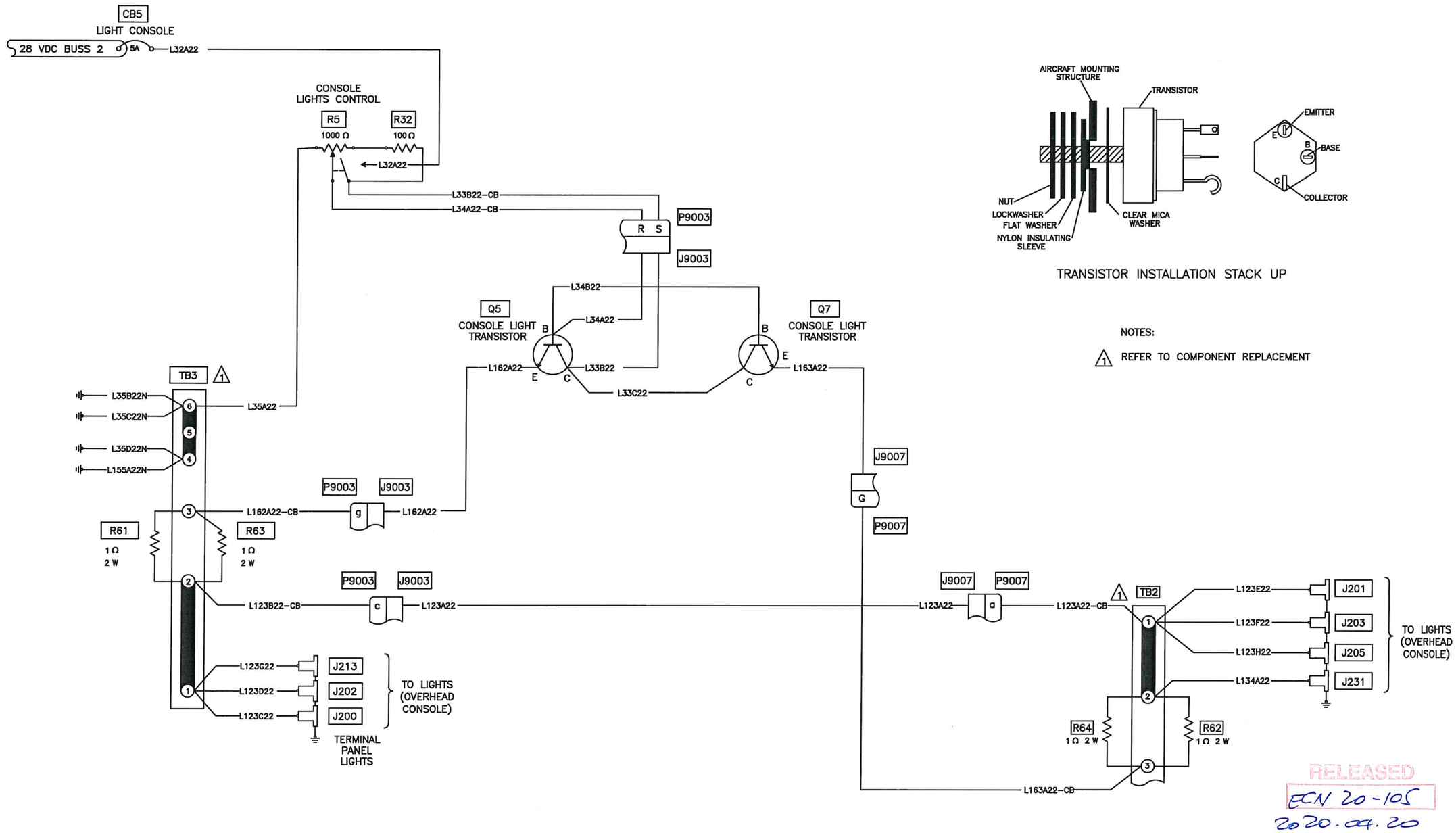

Figure 98–41S. OVERHEAD LIGHTS
(EFFECTIVE ON ALL S/N, EXCEPT 30687, 30931, 30576, 30817 & 30599)

DESIGN	DRAWN BY	DART AEROSPACE LTD HAWKESBURY, ONTARIO, CANADA	
RD	RD		
CHECKED	APPROVED	DRAWING NO.	REV. A
RD		D212–725–2–G2	SHEET 35 OF 57
DATE		TITLE	SCALE
08.11.24		FIGURE 98–41S	NTS

Copyright 2008 by DART AEROSPACE LTD

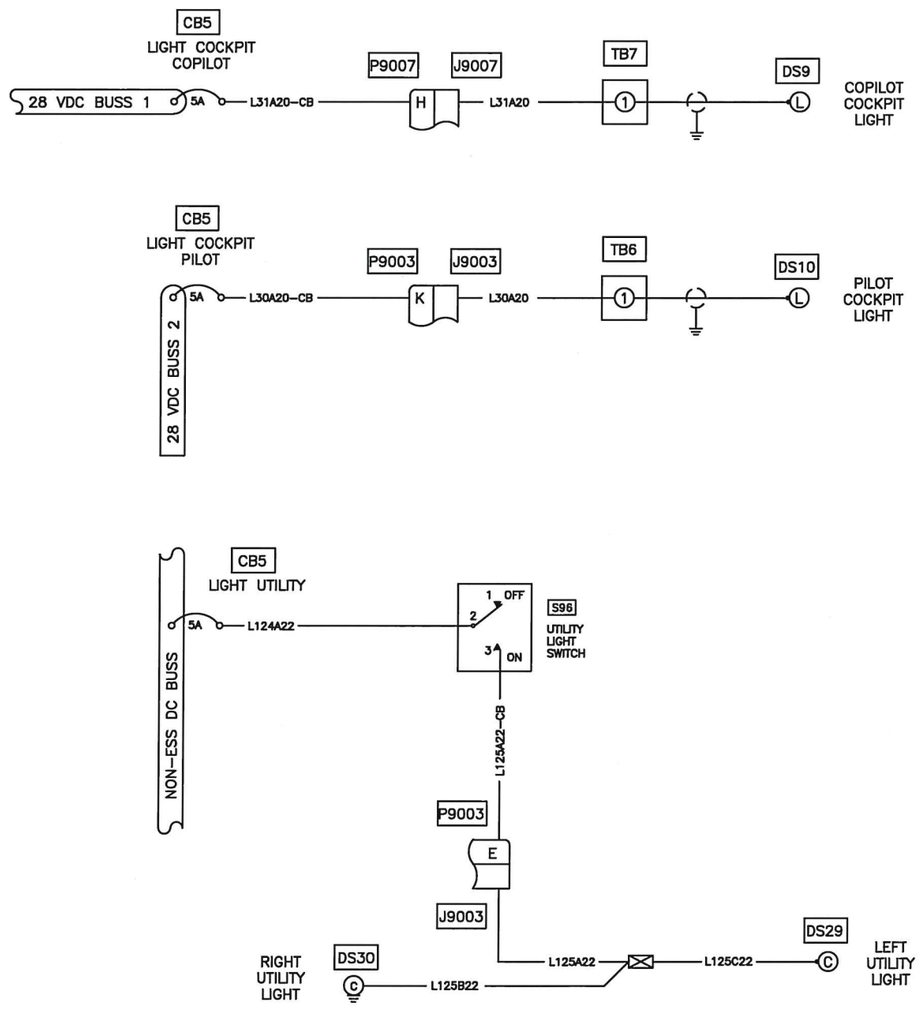

RELEASED
ECN 20-105
2020.09.20

Figure 98-42S. COCKPIT AND UTILITY LIGHTS
(EFFECTIVE ON ALL S/N, EXCEPT 30687, 30931, 30576, 30817 & 30599)

DESIGN	DRAWN BY	DART AEROSPACE LTD HAWKESBURY, ONTARIO, CANADA	
RD	RD		
CHECKED	APPROVED	DRAWING NO.	REV. A
RD	KB	D212-725-2-G2	SHEET 36 OF 57
DATE		TITLE	SCALE
08.11.24		FIGURE 98-42S	NTS

Copyright 2008 by DART AEROSPACE LTD

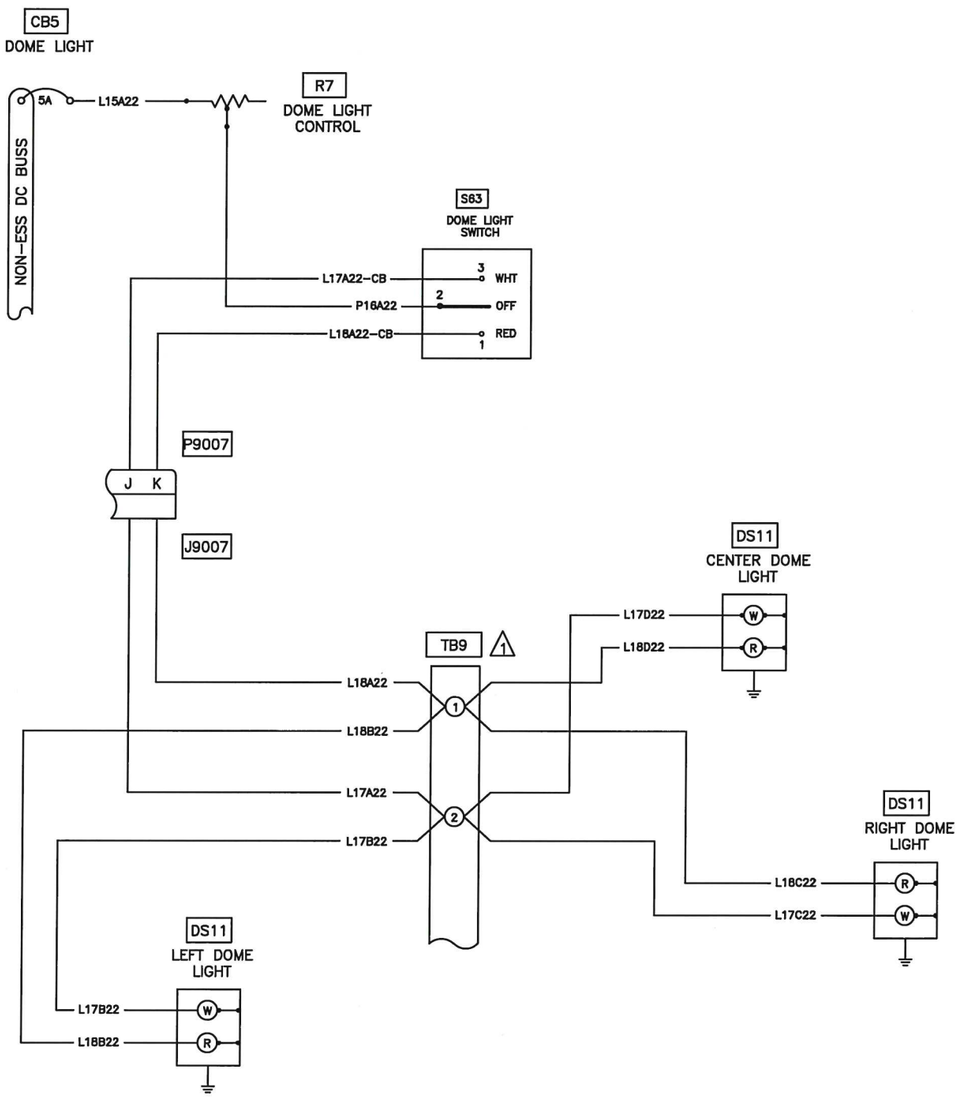

NOTES:

1. REFER TO COMPONENT REPLACEMENT

RELEASED
ECN 20-105
2020.04.20

Figure 98–43S. DOME LIGHTS
(EFFECTIVE ON ALL S/N, EXCEPT 30687, 30931, 30576, 30817 & 30599)

DESIGN	DRAWN BY	DART AEROSPACE LTD HAWKESBURY, ONTARIO, CANADA	
RD	RD		
CHECKED	APPROVED	DRAWING NO.	REV. A
RD		D212–725–2–G2	SHEET 37 OF 57
DATE		TITLE	SCALE
08.11.24		FIGURE 98–43S	NTS

Copyright 2008 by DART AEROSPACE LTD

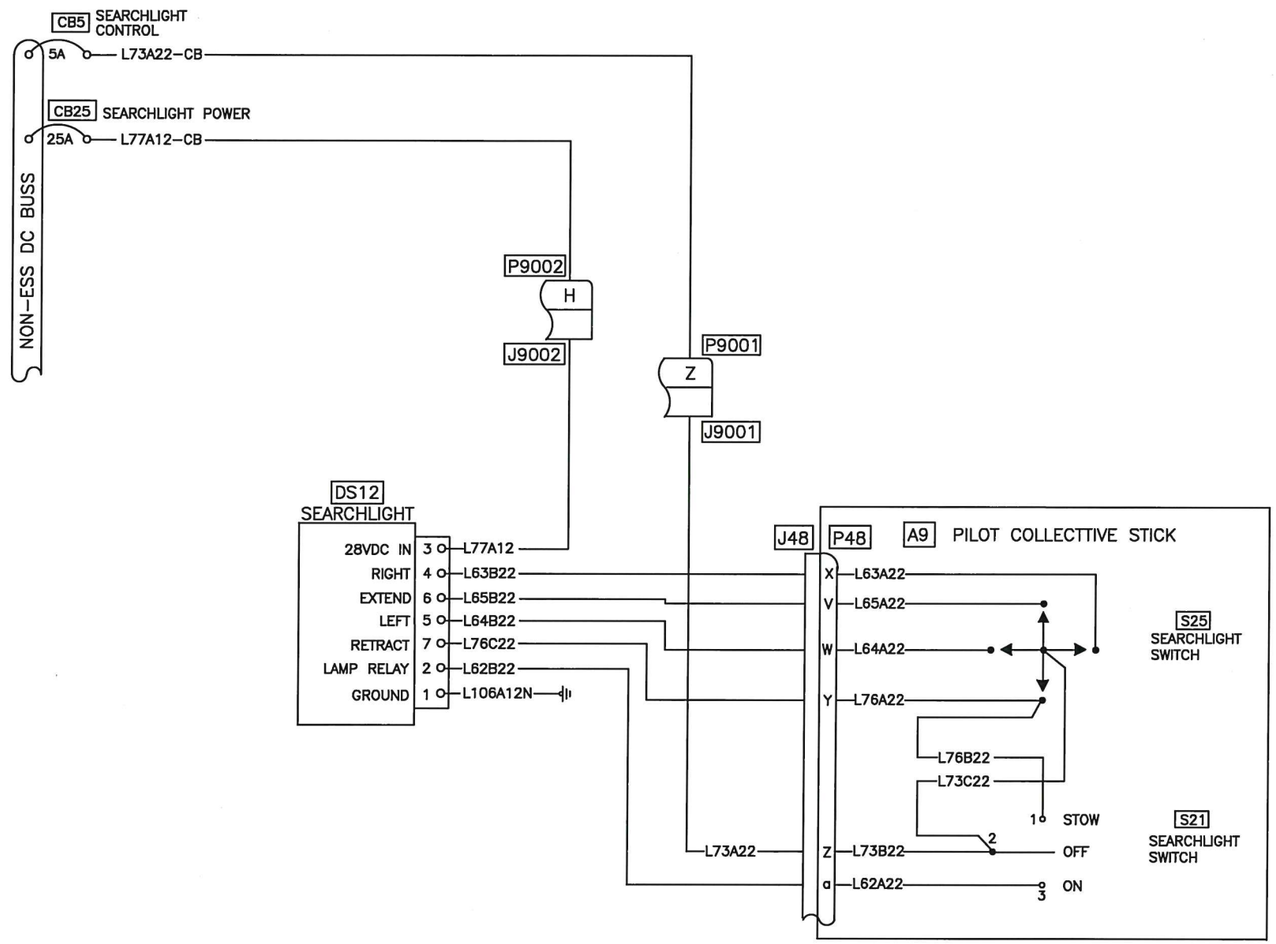

RELEASED
ECN 20-105
2020.04.20

Figure 98-44S. SEARCHLIGHT
(EFFECTIVE ON ALL S/N, EXCEPT 30687, 30931, 30576, 30817 & 30599)

DESIGN	DRAWN BY	DART AEROSPACE LTD HAWKESBURY, ONTARIO, CANADA	
RD	RD		
CHECKED	APPROVED	DRAWING NO.	REV. A
RD	KB	D212-725-2-G2	SHEET 38 OF 57
DATE		TITLE	SCALE
08.11.24		FIGURE 98-44S	NTS

Copyright 2008 by DART AEROSPACE LTD

NOTES:

1. LOCATED UNDER CABIN FOR NORMAL INSTALLATION
2. STOWED EXCEPT WHEN FLOATS ARE INSTALLED. LIGHT IS RELOCATED TO TAIL BOOM USING REVISED WIRING SHOWN.

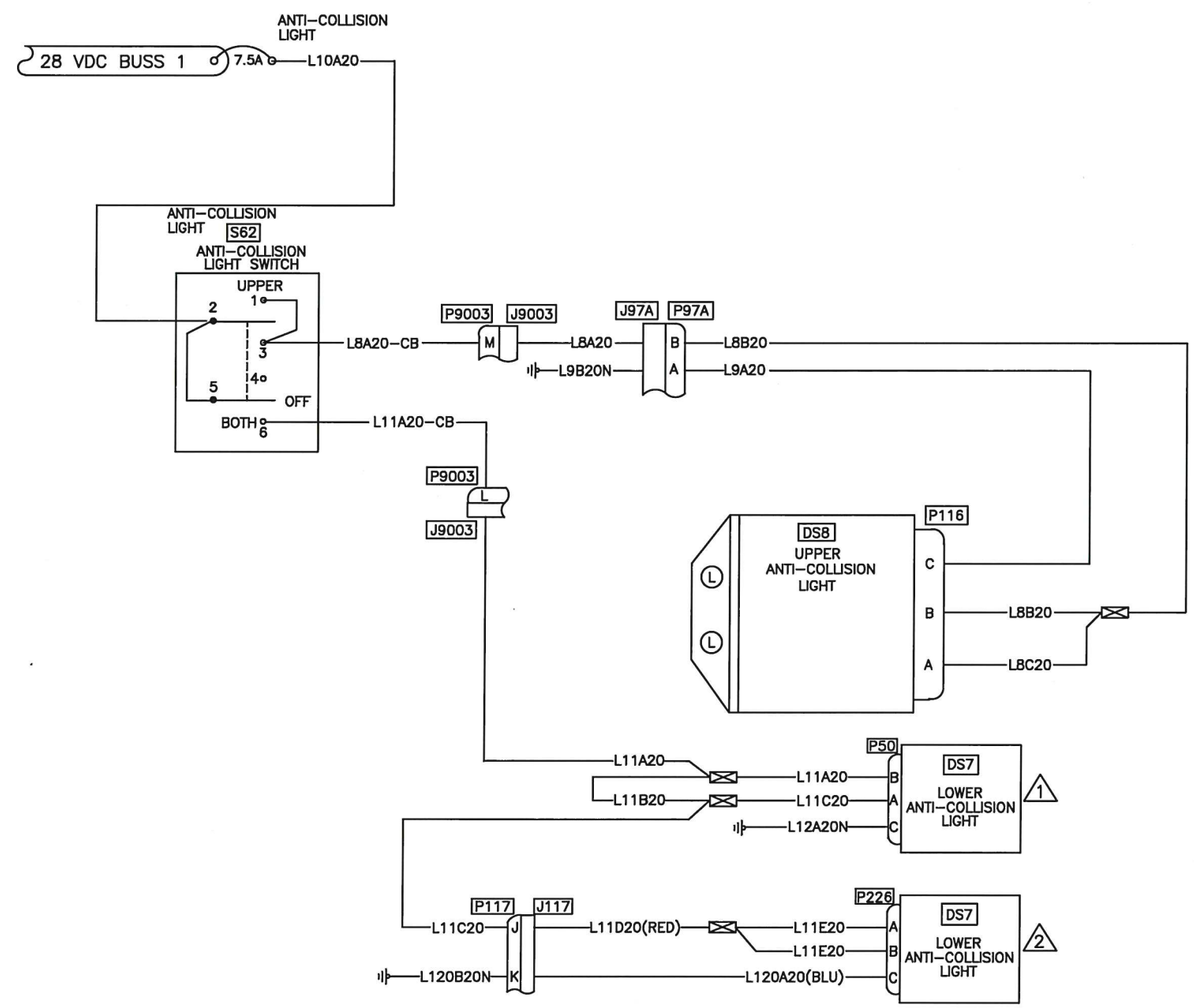

RELEASED
ECN 20-105
2020.04.20

Figure 98-45S. ANTI-COLLISION LIGHTS
(EFFECTIVE ON ALL S/N, EXCEPT 30687, 30931, 30576, 30817 & 30599)

DESIGN	DRAWN BY	DART AEROSPACE LTD HAWKESBURY, ONTARIO, CANADA	
RD	RD		
CHECKED	APPROVED	DRAWING NO.	REV. A
RD	KAP	D212-725-2-G2	SHEET 39 OF 57
DATE		TITLE	SCALE
08.11.24		FIGURE 98-45S	NTS

Copyright 2008 by DART AEROSPACE LTD

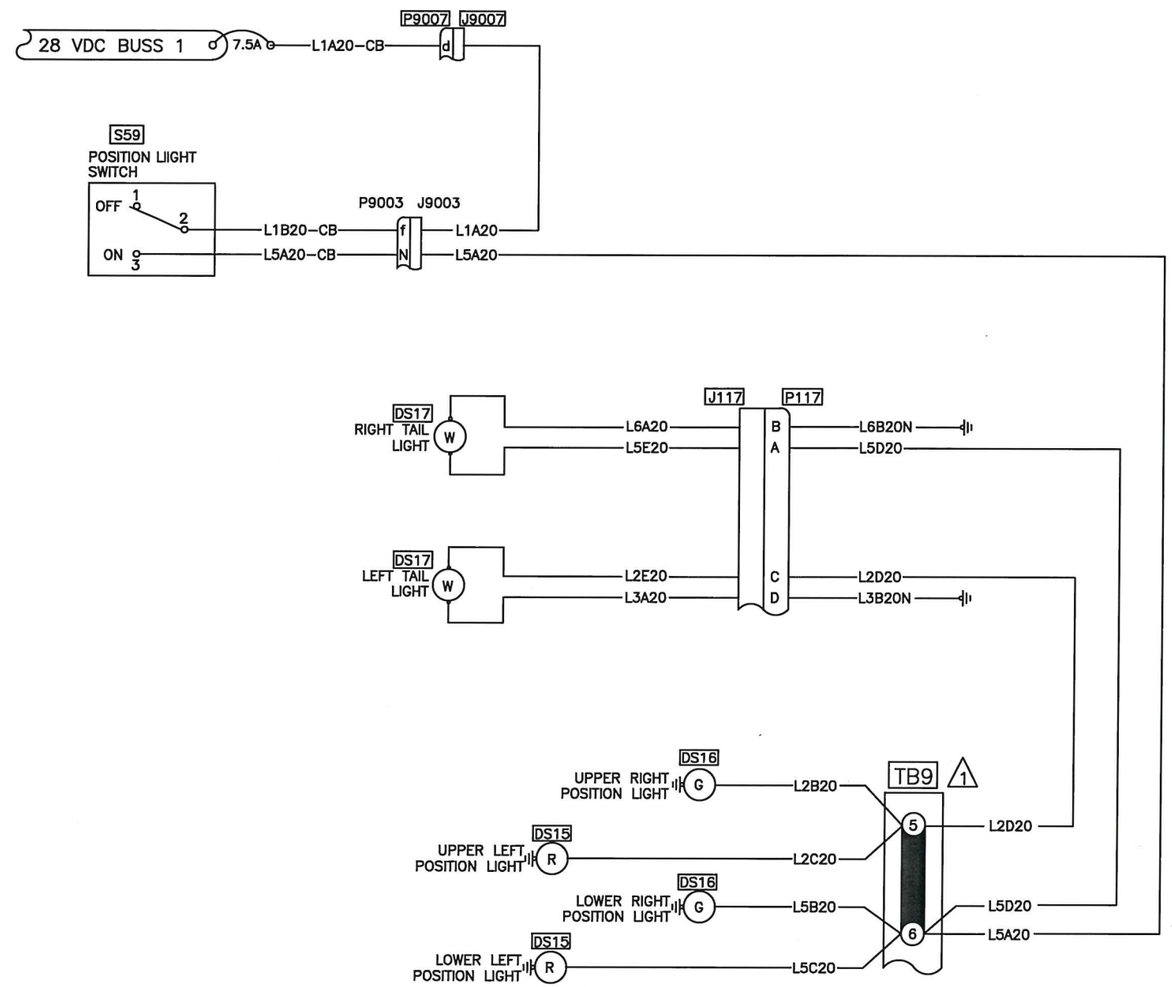

NOTES:

1. REFER TO COMPONENT REPLACEMENT

RELEASED
ECN 20-105
2020.04.20

Figure 98-46S. POSITION LIGHTS
(EFFECTIVE ON ALL S/N, EXCEPT 30687, 30931, 30576, 30817 & 30599)

DESIGN	DRAWN BY	DART AEROSPACE LTD HAWKESBURY, ONTARIO, CANADA	
RD	RD		
CHECKED	APPROVED	DRAWING NO.	REV. A
RD		D212-725-2-G2	SHEET 40 OF 57
DATE		TITLE	SCALE
08.11.24		FIGURE 98-46S	NTS

Copyright 2008 by DART AEROSPACE LTD

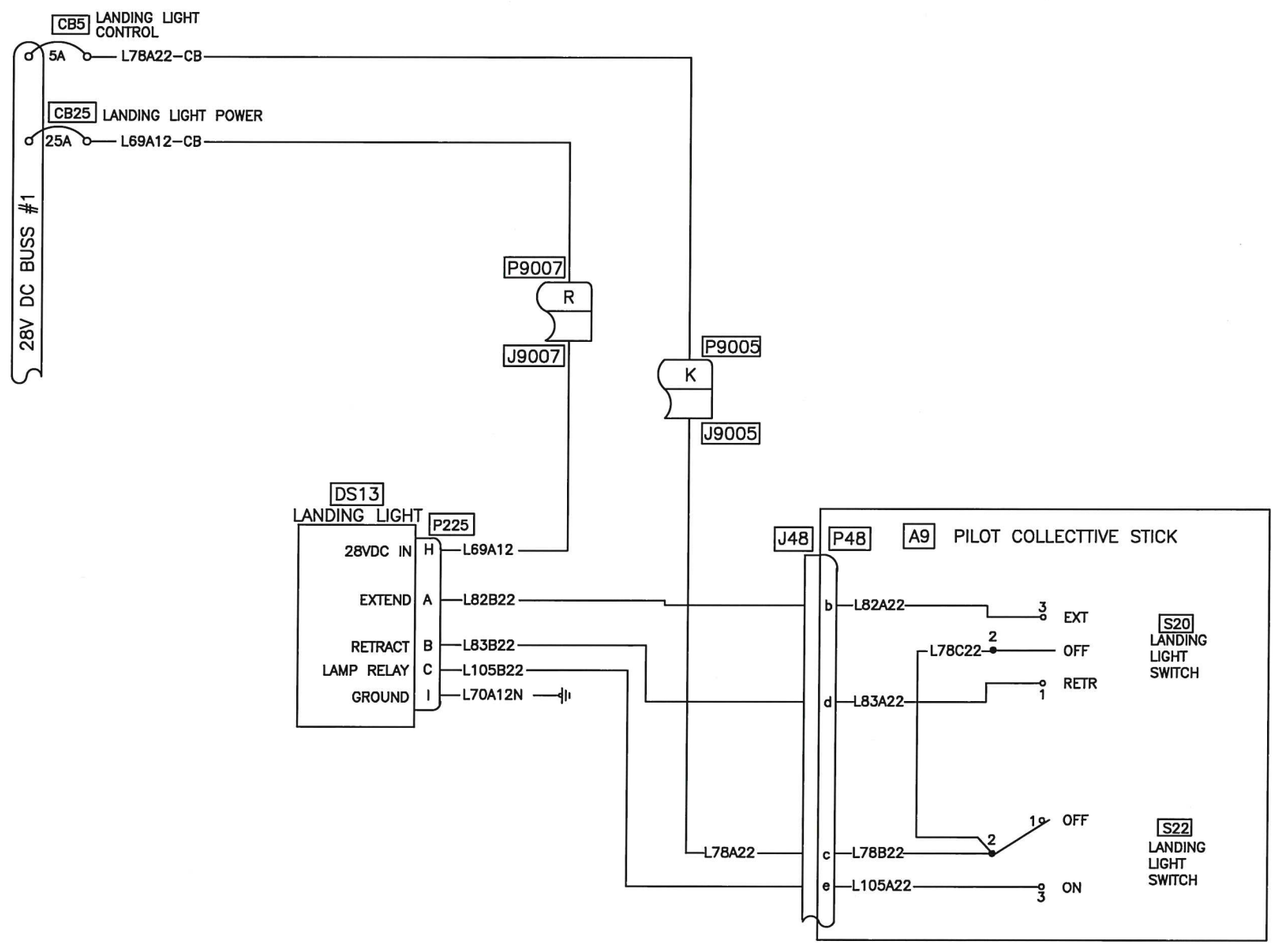

RELEASED
ECN 20-105
2020-04.20

Figure 98–47S. LANDING LIGHTS
(EFFECTIVE ON ALL S/N, EXCEPT 30687, 30931, 30576, 30817 & 30599)

DESIGN	DRAWN BY	DART AEROSPACE LTD HAWKESBURY, ONTARIO, CANADA	
RD	RD		
CHECKED	APPROVED	DRAWING NO.	REV. A
RD	KAS	D212–725–2–G2	SHEET 41 OF 57
DATE		TITLE	SCALE
08.11.24		FIGURE 98–47S	NTS

Copyright 2008 by DART AEROSPACE LTD

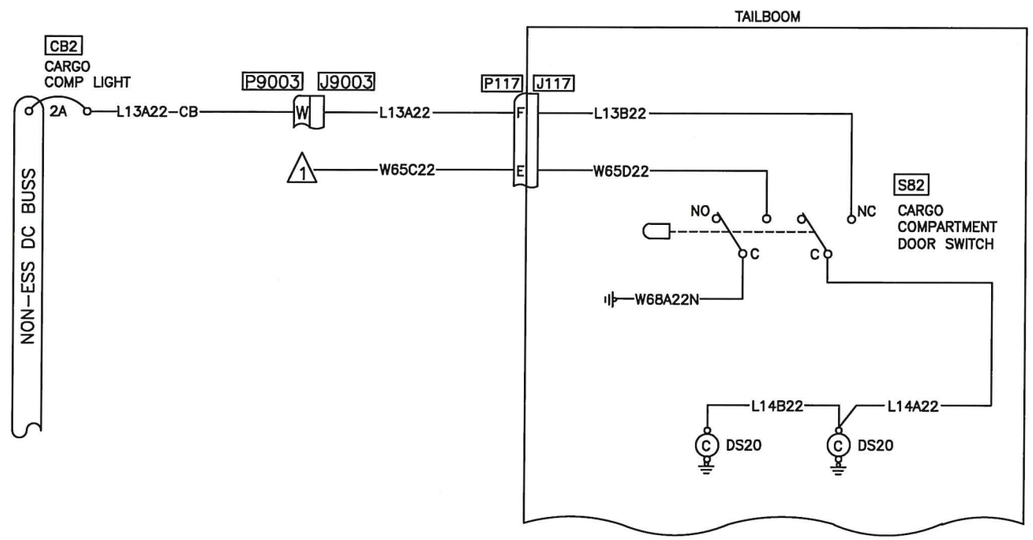

NOTES:

1. REFER TO MASTER CAUTION LIGHTS

RELEASED
ECN 20-105
2020.04.20

Figure 98-48S. CARGO COMPARTMENT LIGHTS
(EFFECTIVE ON ALL S/N, EXCEPT 30687, 30931, 30576, 30817 & 30599)

DESIGN	DRAWN BY	DART AEROSPACE LTD HAWKESBURY, ONTARIO, CANADA	
RD	RD		
CHECKED	APPROVED	DRAWING NO.	REV. A
RD	KB	D212-725-2-G2	SHEET 42 OF 57
DATE		TITLE	SCALE
08.11.24		FIGURE 98-48S	NTS

Copyright 2008 by DART AEROSPACE LTD

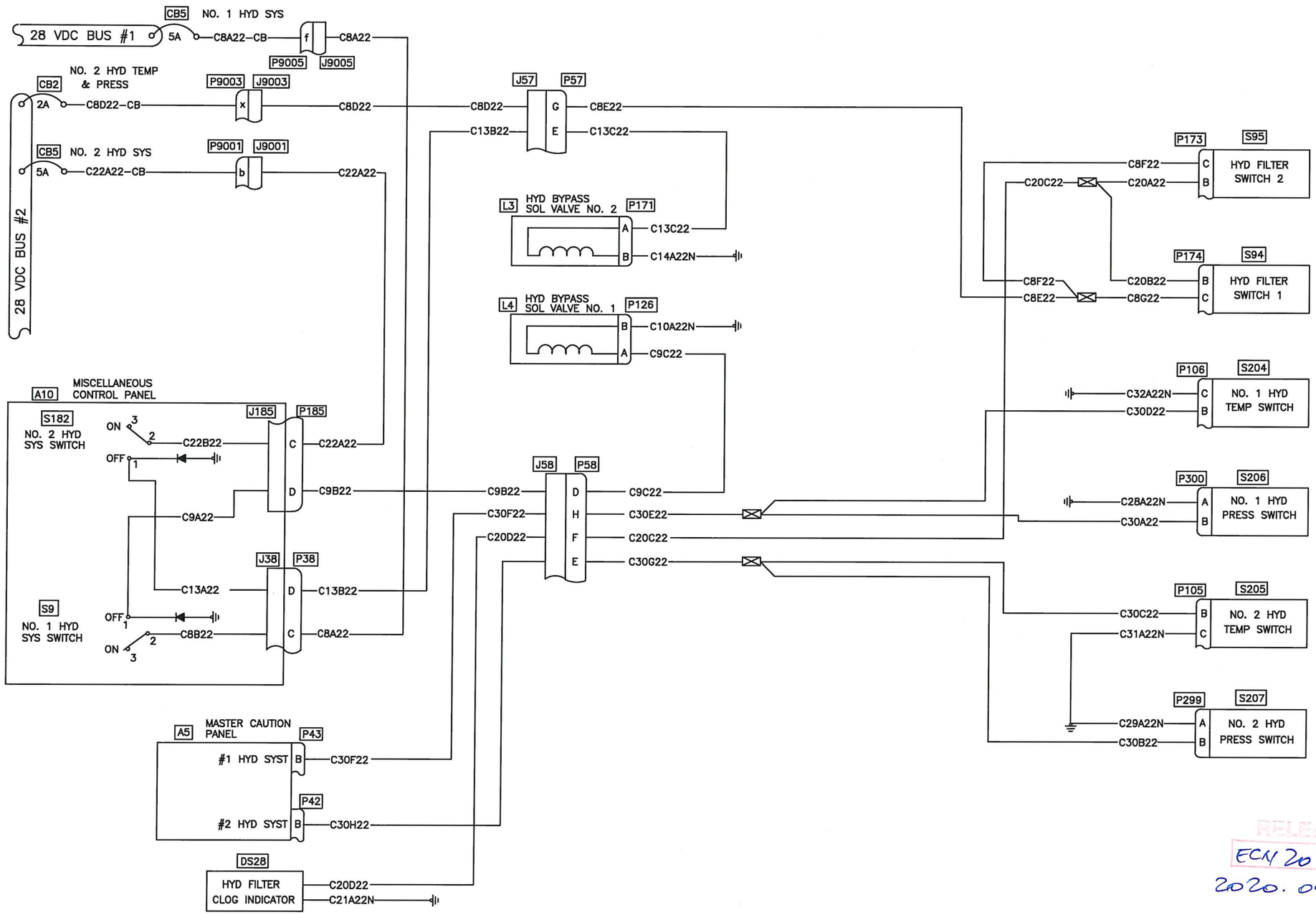

RELEASED
ECN 20-105
2020.04.20

Figure 98-49S. HYDRAULIC SYSTEM
(EFFECTIVE ON ALL S/N, EXCEPT 30687, 30931, 30576, 30817 & 30599)

DESIGN	DRAWN BY	DART AEROSPACE LTD HAWKESBURY, ONTARIO, CANADA	
RD	RD		
CHECKED	APPROVED	DRAWING NO.	REV. A
RD	KB	D212-725-2-G2	SHEET 43 OF 57
DATE		TITLE	SCALE
08.11.24		FIGURE 98-49S	NTS

Copyright 2008 by DART AEROSPACE LTD

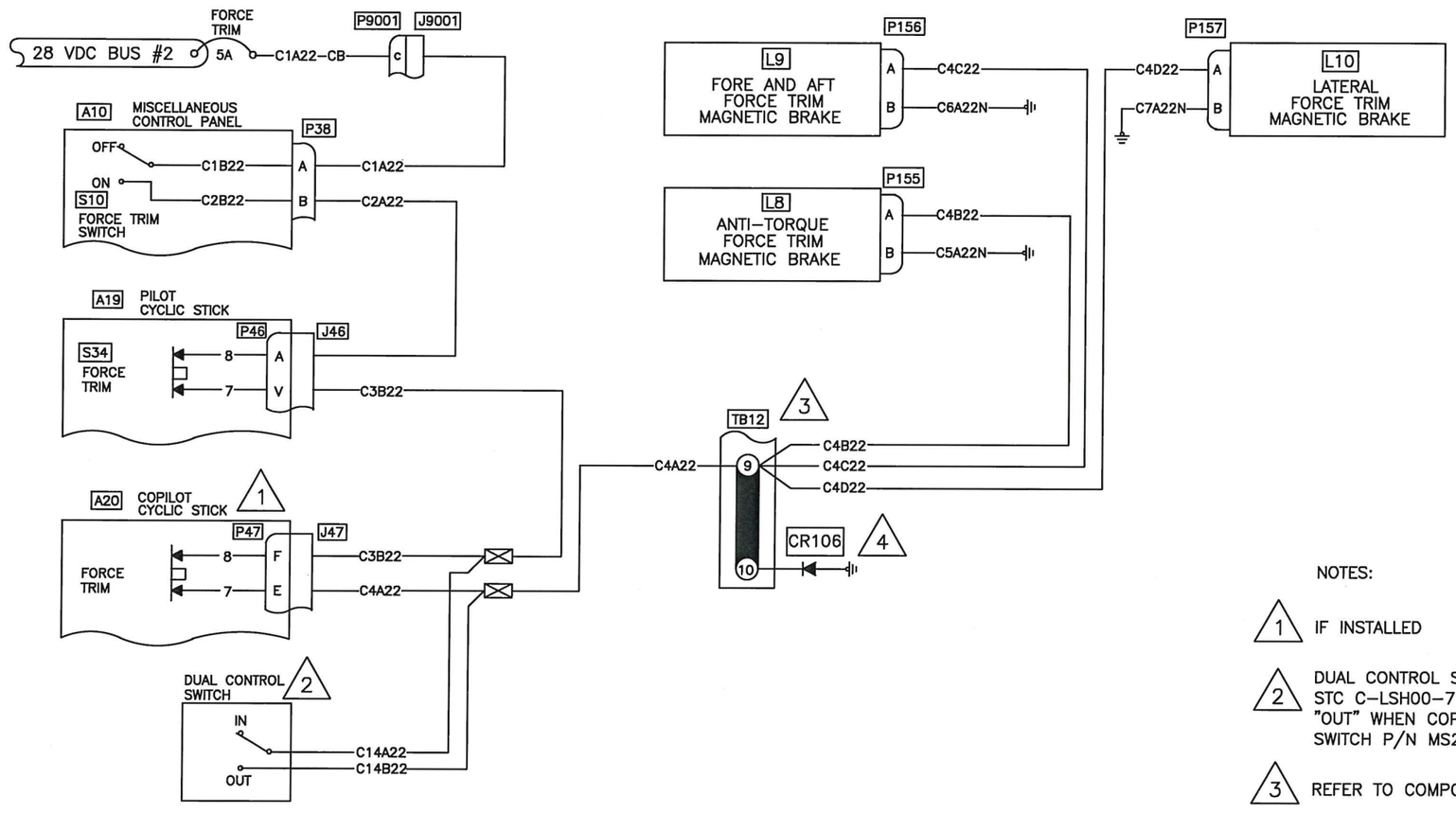

NOTES:

1. IF INSTALLED
2. DUAL CONTROL SWITCH INSTALLED PER STC C–LSH00–716/D. SELECT SWITCH TO "OUT" WHEN COPILOTS CYCLIC REMOVED. SWITCH P/N MS24523–22.
3. REFER TO COMPONENT REPLACEMENT
4. USED FOR TRANSIENT SUPPRESSION

RELEASED
ECN 20-105
2020.04.20

Figure 98–54S. FORCE TRIM
(EFFECTIVE ON ALL S/N, EXCEPT 30687, 30931, 30576, 30817 & 30599)

DESIGN	DRAWN BY	DART AEROSPACE LTD HAWKESBURY, ONTARIO, CANADA	
RD	RD		
CHECKED	APPROVED	DRAWING NO.	REV. A
RD		D212–725–2–G2	SHEET 44 OF 57
DATE		TITLE	SCALE
08.11.24		FIGURE 98–54S	NTS

Copyright 2008 by DART AEROSPACE LTD

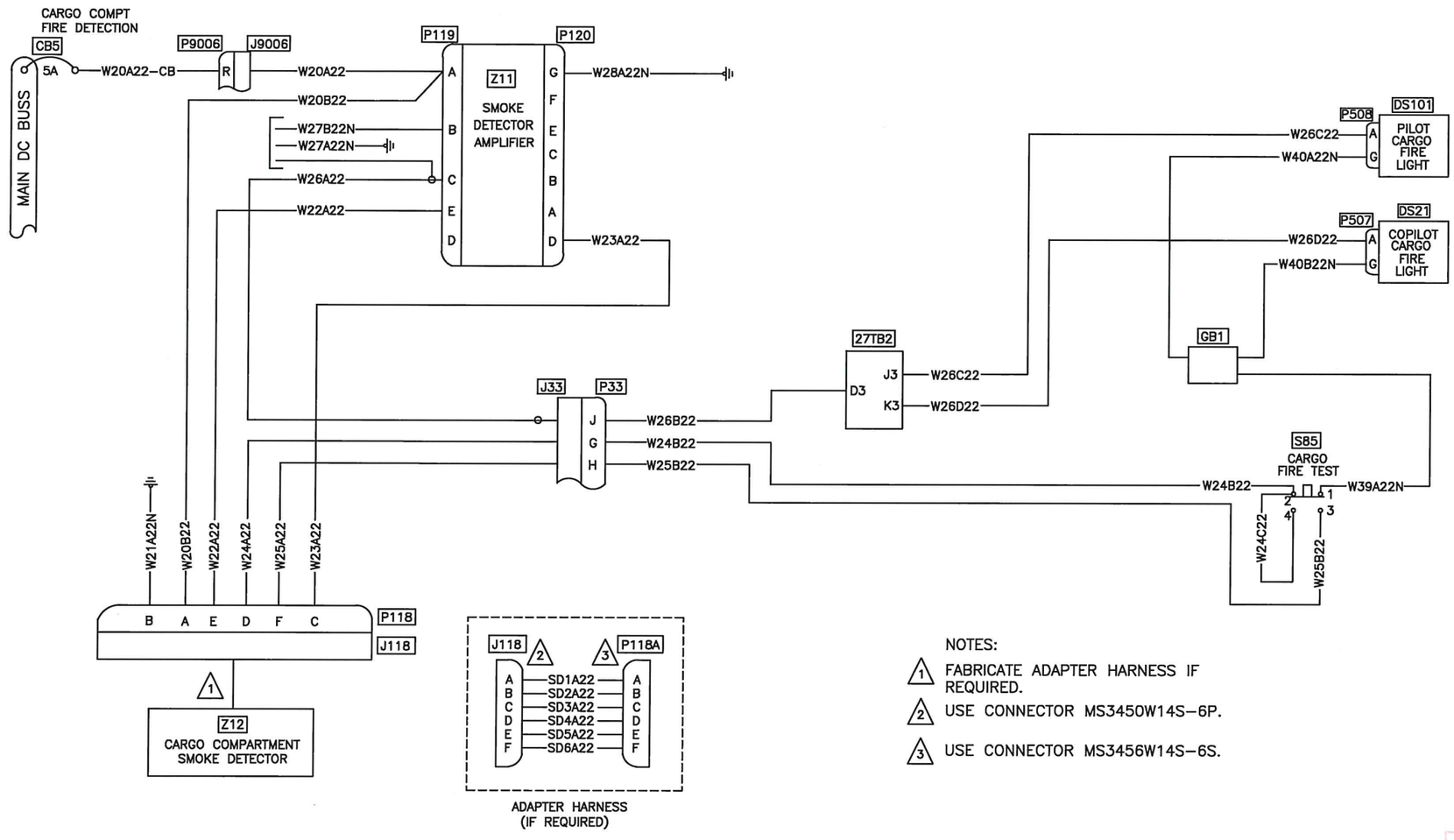

RELEASED
ECN 20-105
2020.04.20

Figure 98-55S. CARGO FIRE DETECTION
(EFFECTIVE ON ALL S/N, EXCEPT 30687, 30931, 30576, 30817 & 30599)

DESIGN	DRAWN BY	DART AEROSPACE LTD HAWKESBURY, ONTARIO, CANADA	
RD	RD		
CHECKED	APPROVED	DRAWING NO.	REV. A
RD	KB	D212-725-2-G2	SHEET 45 OF 57
DATE		TITLE	SCALE
08.11.24		FIGURE 98-55S	NTS

Copyright 2008 by DART AEROSPACE LTD

NOTES:

1. STATIC PORT HEATER WIRING INSTALLED IN P9005 ONLY. NO WIRING INSTALLED IN J9005.

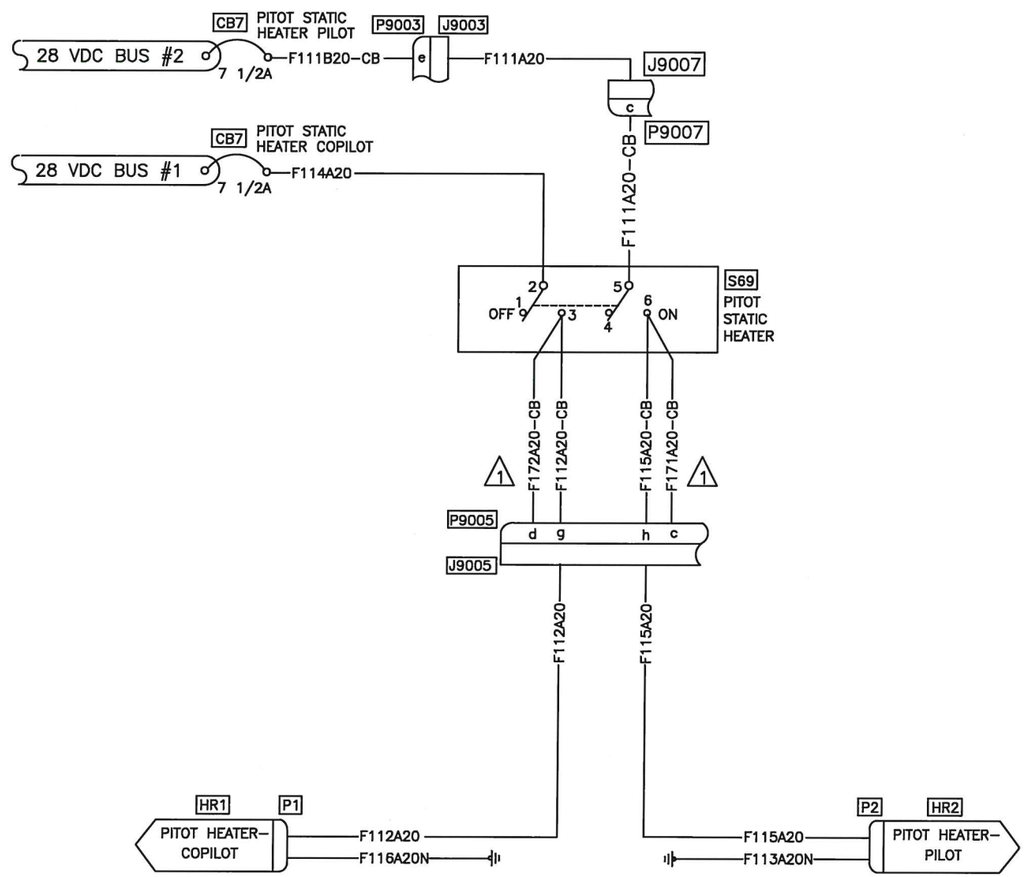

RELEASED
ECN 20-105
2020.04.20

Figure 98-56S. PITOT STATIC HEATERS
(EFFECTIVE ON ALL S/N, EXCEPT 30687, 30931, 30576, 30817 & 30599)

DESIGN RD	DRAWN BY RD	DART	DART AEROSPACE LTD HAWKESBURY, ONTARIO, CANADA
CHECKED RD	APPROVED KB	DRAWING NO. D212-725-2-G2	REV. A SHEET 46 OF 57
DATE 08.11.24		TITLE FIGURE 98-56S	SCALE NTS

Copyright 2008 by DART AEROSPACE LTD

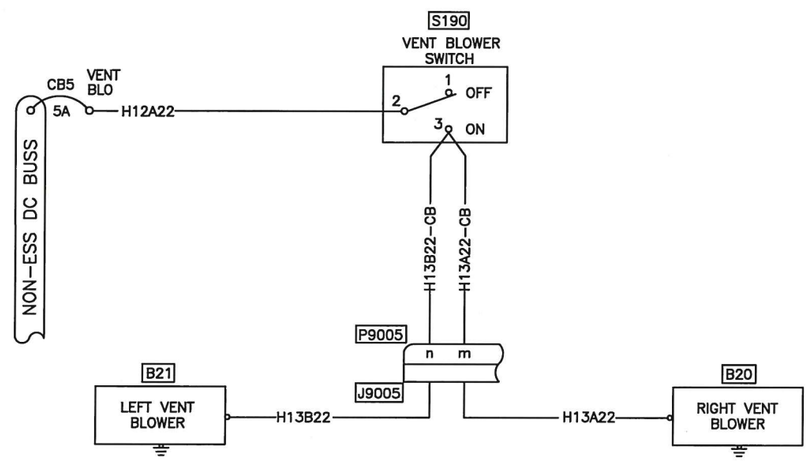

RELEASED
ECN120-105
2020.04.20

Figure 98-57S. VENT BLOWERS
(EFFECTIVE ON ALL S/N, EXCEPT 30687, 30931, 30576, 30817 & 30599)

DESIGN	DRAWN BY	DART AEROSPACE LTD HAWKESBURY, ONTARIO, CANADA	
RD	RD		
CHECKED	APPROVED	DRAWING NO.	REV. A
RD	KB	D212-725-2-G2	SHEET 47 OF 57
DATE		TITLE	SCALE
08.11.24		FIGURE 98-57S	NTS

Copyright 2008 by DART AEROSPACE LTD

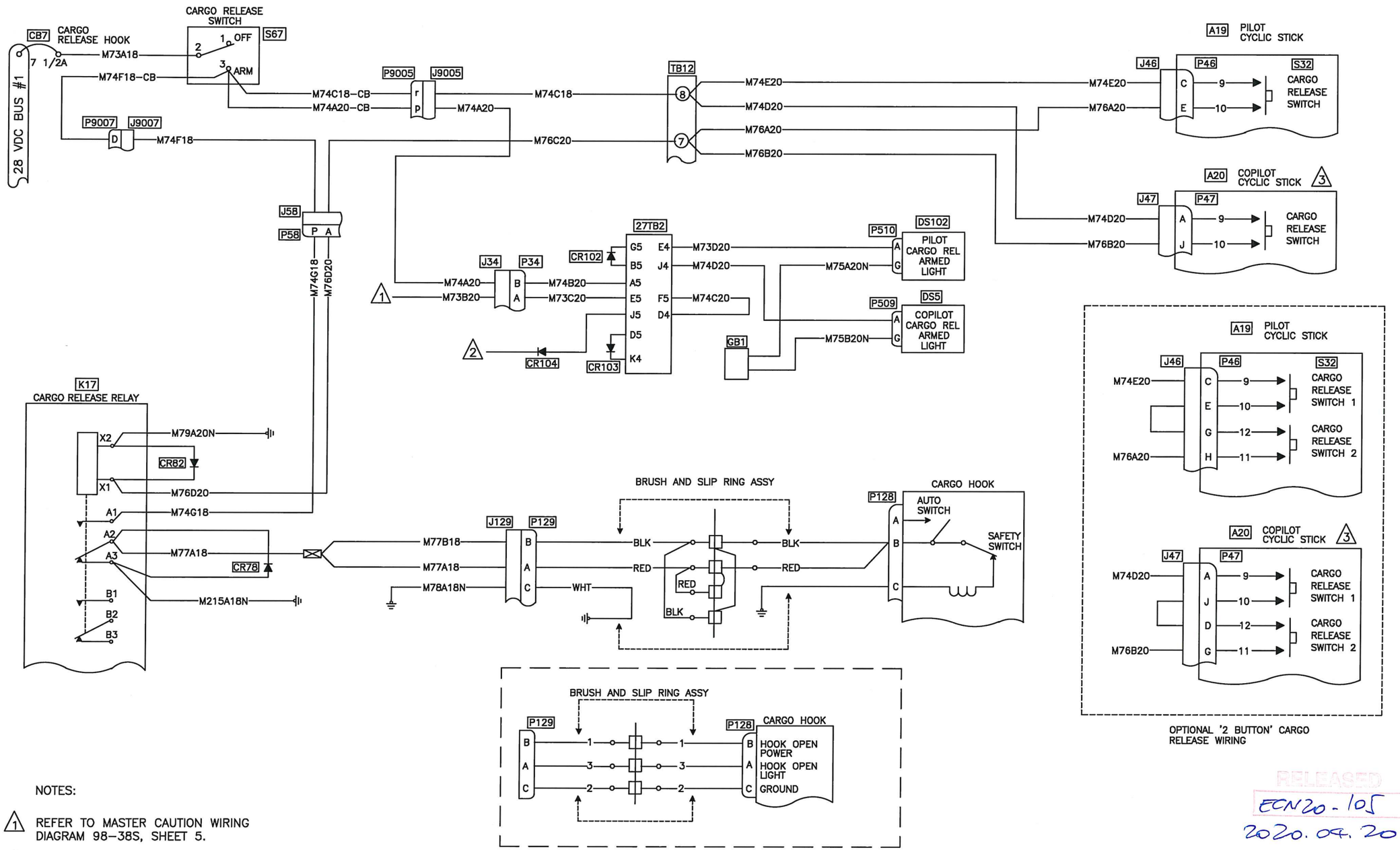

NOTES:

1. REFER TO MASTER CAUTION WIRING DIAGRAM 98-38S, SHEET 5.
2. REFER TO LONGLINE/HELITORCH WIRING DIAGRAM
3. IF COPILOT CYCLIC INSTALLED.

Figure 98-59S. CARGO RELEASE
(EFFECTIVE ON ALL S/N, EXCEPT 30687, 30931, 30576, 30817 & 30599)

RELEASED
ECN20-105
2020.04.20

DESIGN	DRAWN BY	DART AEROSPACE LTD HAWKESBURY, ONTARIO, CANADA	
RD	RD		
CHECKED	APPROVED	DRAWING NO.	REV. A
RD	KB	D212-725-2-G2	SHEET 48 OF 57
DATE		TITLE	SCALE
08.11.24		FIGURE 98-59S	NTS

Copyright 2008 by DART AEROSPACE LTD

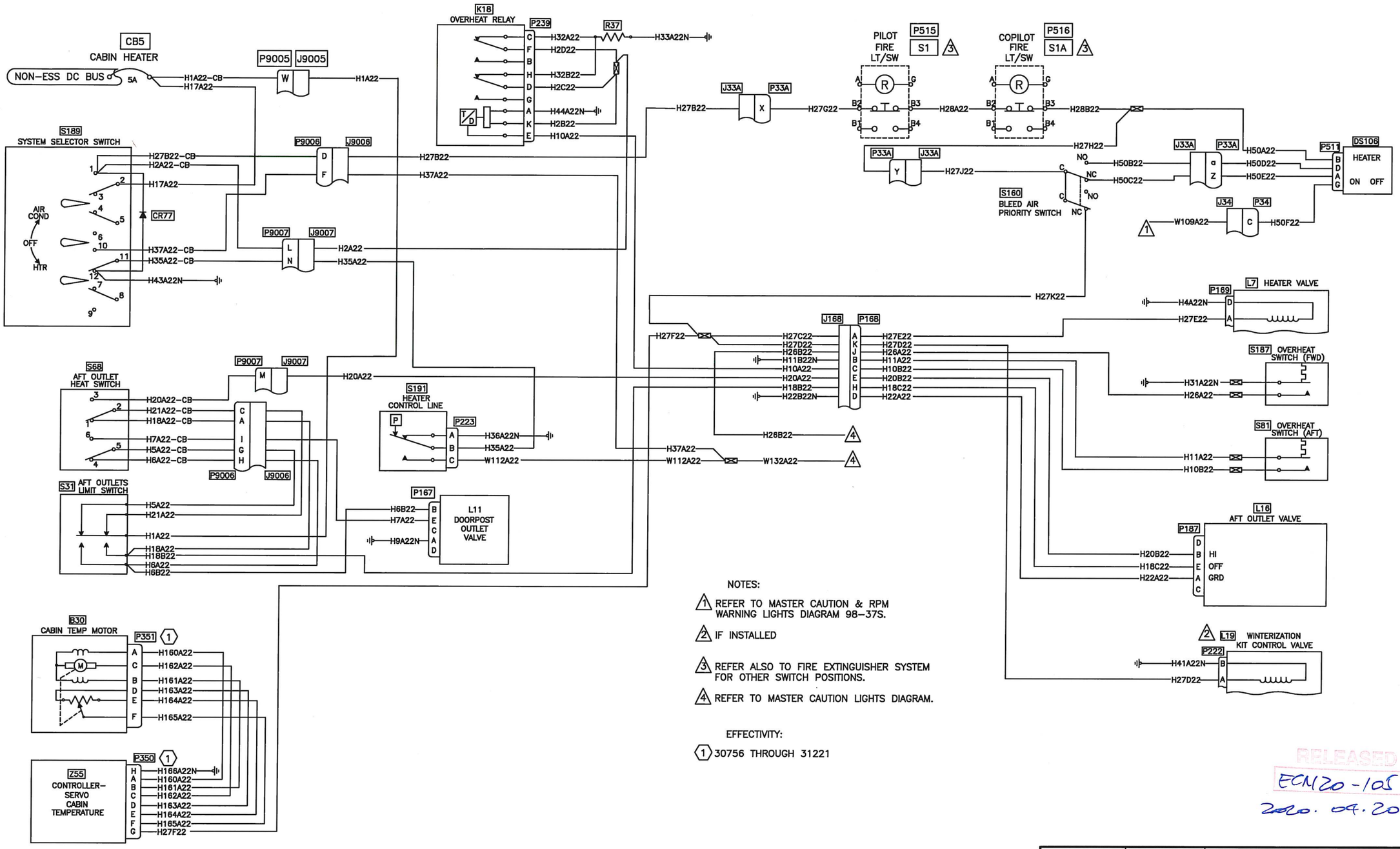

NOTES:

1. REFER TO MASTER CAUTION & RPM WARNING LIGHTS DIAGRAM 98-37S.
2. IF INSTALLED
3. REFER ALSO TO FIRE EXTINGUISHER SYSTEM FOR OTHER SWITCH POSITIONS.
4. REFER TO MASTER CAUTION LIGHTS DIAGRAM.

EFFECTIVITY:

(1) 30756 THROUGH 31221

RELEASED
ECN 20-105
2020.04.20

Figure 98-60S. HEATER/AIR CONDITIONER
(EFFECTIVE ON ALL S/N, EXCEPT 30687, 30931, 30576, 30817 & 30599)

DESIGN	DRAWN BY	DART AEROSPACE LTD HAWKESBURY, ONTARIO, CANADA	
RD	KB		
CHECKED	APPROVED	DRAWING NO.	REV. C
LJ / HS	KB	D212-725-2-G2	SHEET 49 OF 57
DATE		TITLE	SCALE
17.10.25		FIGURE 98-60S	NTS

Copyright 2008 by DART AEROSPACE LTD

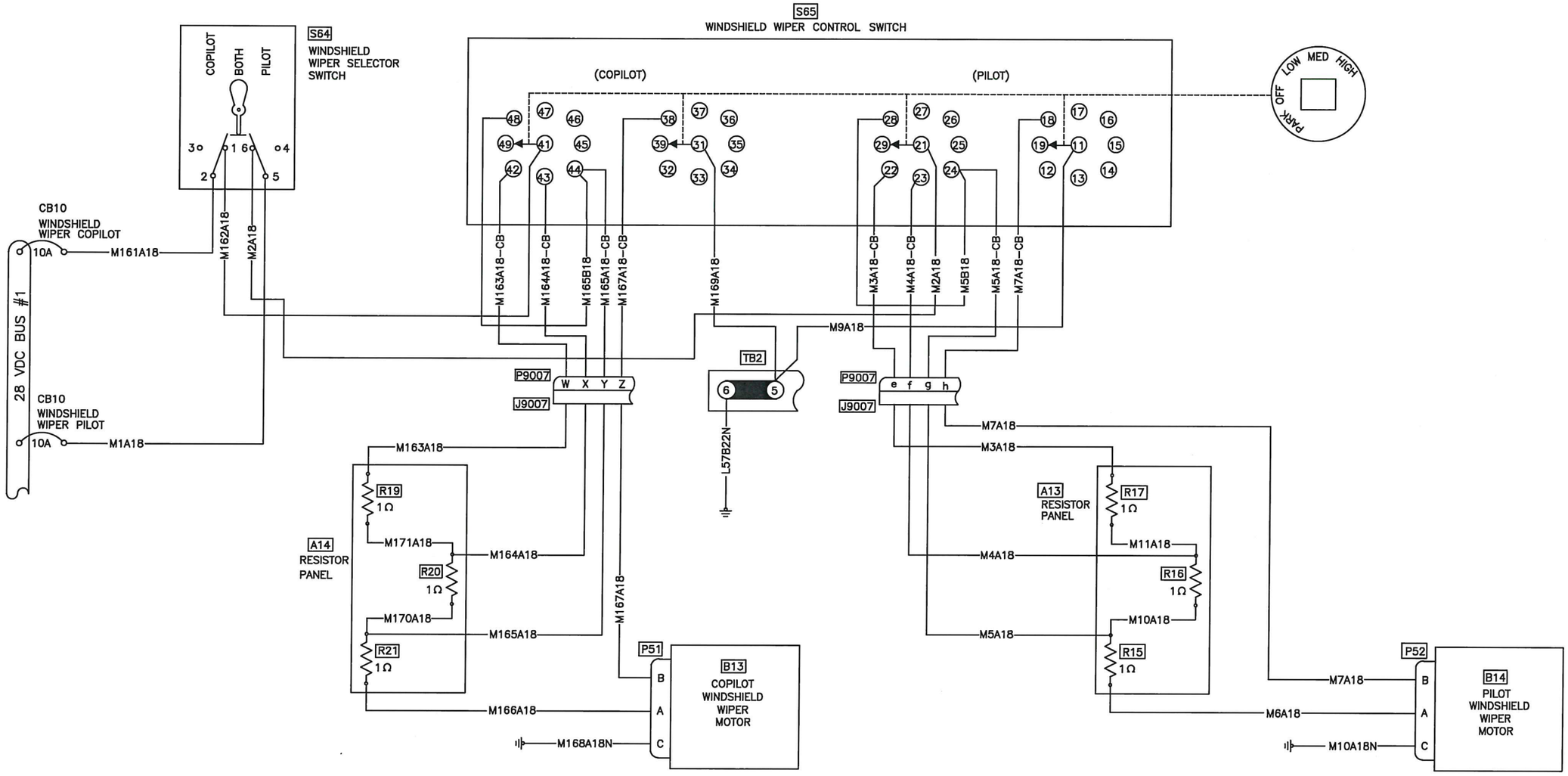

RELEASED
ECN 20-105
2020.04.20

Figure 98–61S. WINDSHIELD WIPERS
(EFFECTIVE ON ALL S/N, EXCEPT 30687, 30931, 30576, 30817 & 30599)

DESIGN	DRAWN BY	DART AEROSPACE LTD HAWKESBURY, ONTARIO, CANADA	
RD	RD		
CHECKED	APPROVED	DRAWING NO.	REV. A
RD	KB	D212–725–2–G2	SHEET 50 OF 57
DATE		TITLE	SCALE
08.11.24		FIGURE 98–61S	NTS

Copyright 2008 by DART AEROSPACE LTD

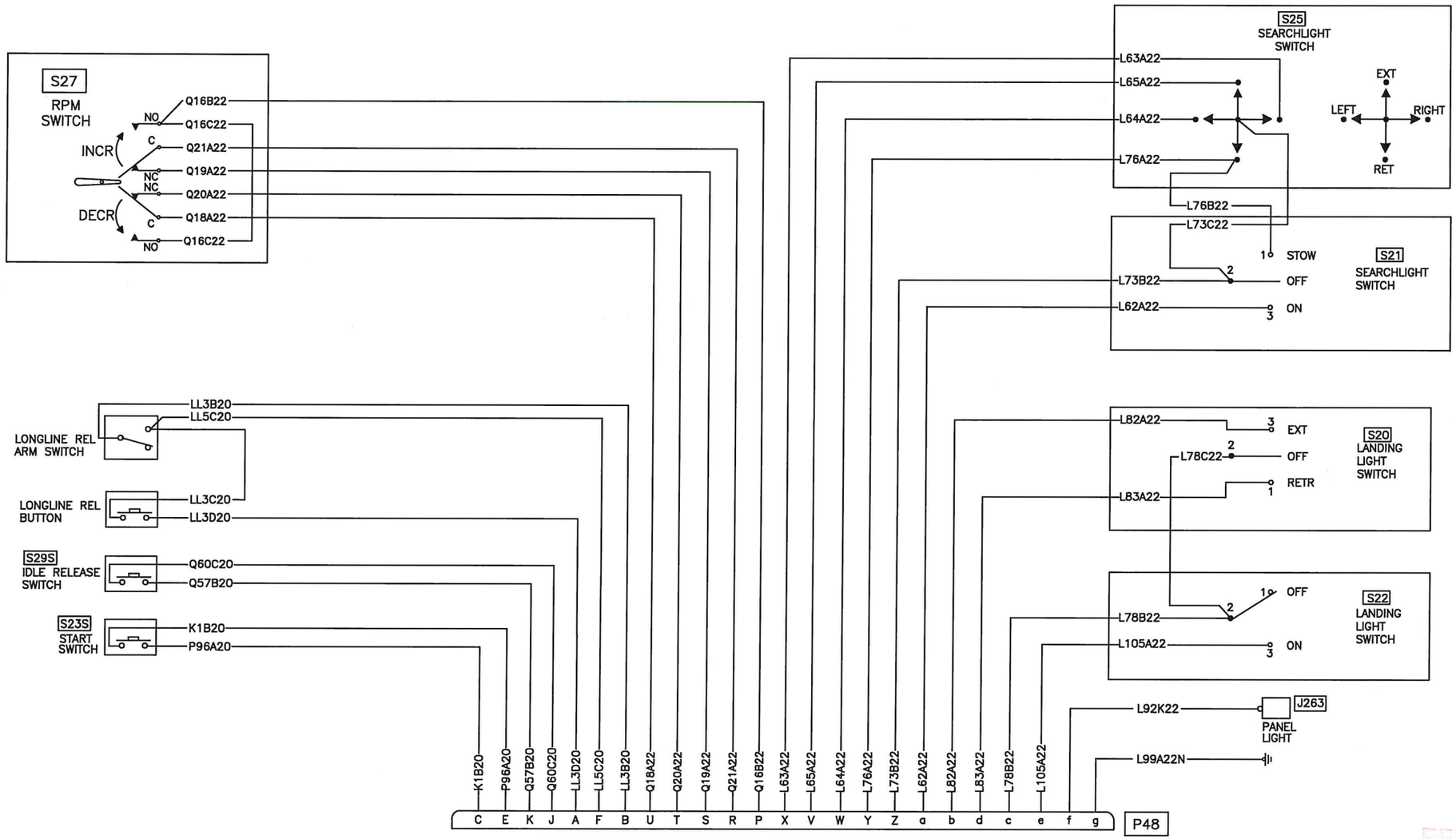

RELEASED
ECN 20-105
2020.04.20

Fig. 98–62S PILOT COLLECTIVE STICK WIRING
(EFFECTIVE ON ALL S/N, EXCEPT 30687, 30931, 30576, 30817 & 30599)

DESIGN	DRAWN BY	DART AEROSPACE LTD HAWKESBURY, ONTARIO, CANADA	
RD	RD		
CHECKED	APPROVED	DRAWING NO.	REV. A
RD	KB	D212–725–2–G2	SHEET 51 OF 57
DATE		TITLE	SCALE
08.11.24		FIGURE 98–62S	NTS

Copyright 2008 by DART AEROSPACE LTD

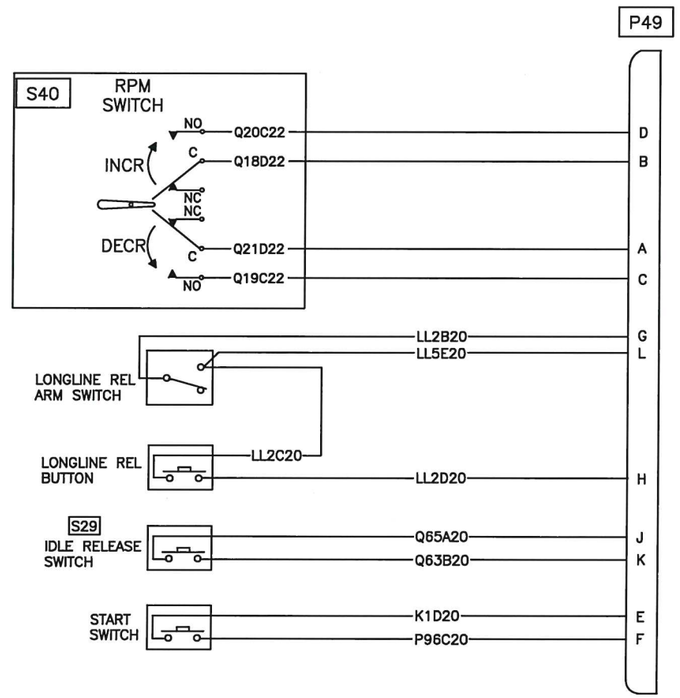

RELEASED
ECN 20-105
2020.04.20

Fig. 98–63S COPILOT COLLECTIVE STICK WIRING
(IF INSTALLED)
(EFFECTIVE ON ALL S/N, EXCEPT 30687, 30931, 30576, 30817 & 30599)

DESIGN	DRAWN BY	DART AEROSPACE LTD HAWKESBURY, ONTARIO, CANADA	
RD	RD		
CHECKED	APPROVED	DRAWING NO.	REV. A
RD	KB	D212–725–2–G2	SHEET 52 OF 57
DATE		TITLE	SCALE
08.11.24		FIGURE 98–63S	NTS

Copyright 2008 by DART AEROSPACE LTD

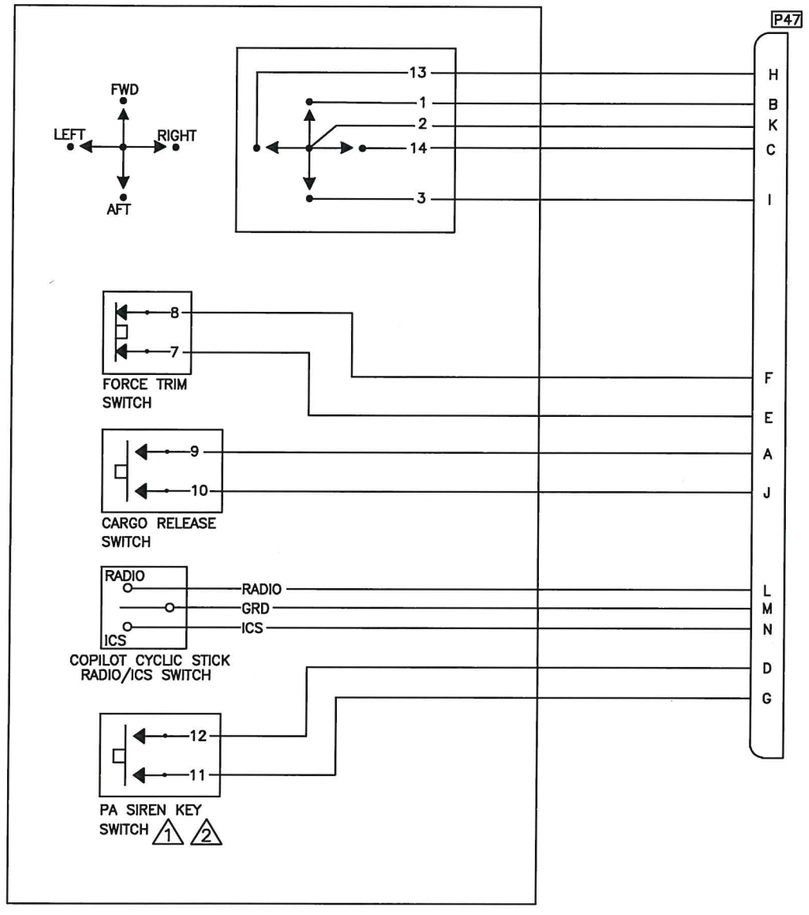

COPILOT's CYCLIC STICK

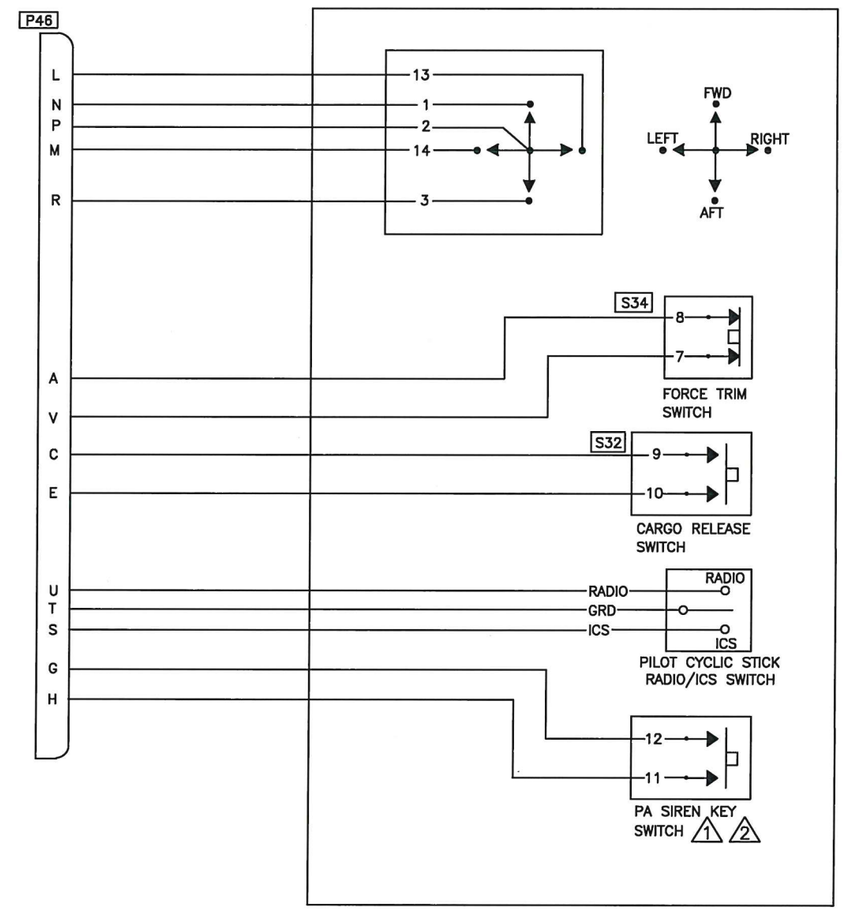

PILOT's CYCLIC STICK

NOTES:

1. IF INSTALLED
2. MAY ALSO BE USED AS SECOND CARGO RELEASE SWITCH. PA SIREN KEY IS THEN MOVED TO 'LEFT' ON CHINA HAT SWITCH.

RELEASED
ECN 20-105
2020.04.20

Fig. 98–64S PILOT's & COPILOT's CYCLIC STICK WIRING DIAGRAM
(EFFECTIVE ON ALL S/N, EXCEPT 30687, 30931, 30576, 30817 & 30599)

DESIGN	DRAWN BY	DART AEROSPACE LTD HAWKESBURY, ONTARIO, CANADA	
RD	RD		
CHECKED	APPROVED	DRAWING NO.	REV. A
RD	KB	D212–275–2–G2	SHEET 53 OF 57
DATE		TITLE	SCALE
08.11.24		FIGURE 98–64S	NTS

Copyright 2008 by DART AEROSPACE LTD

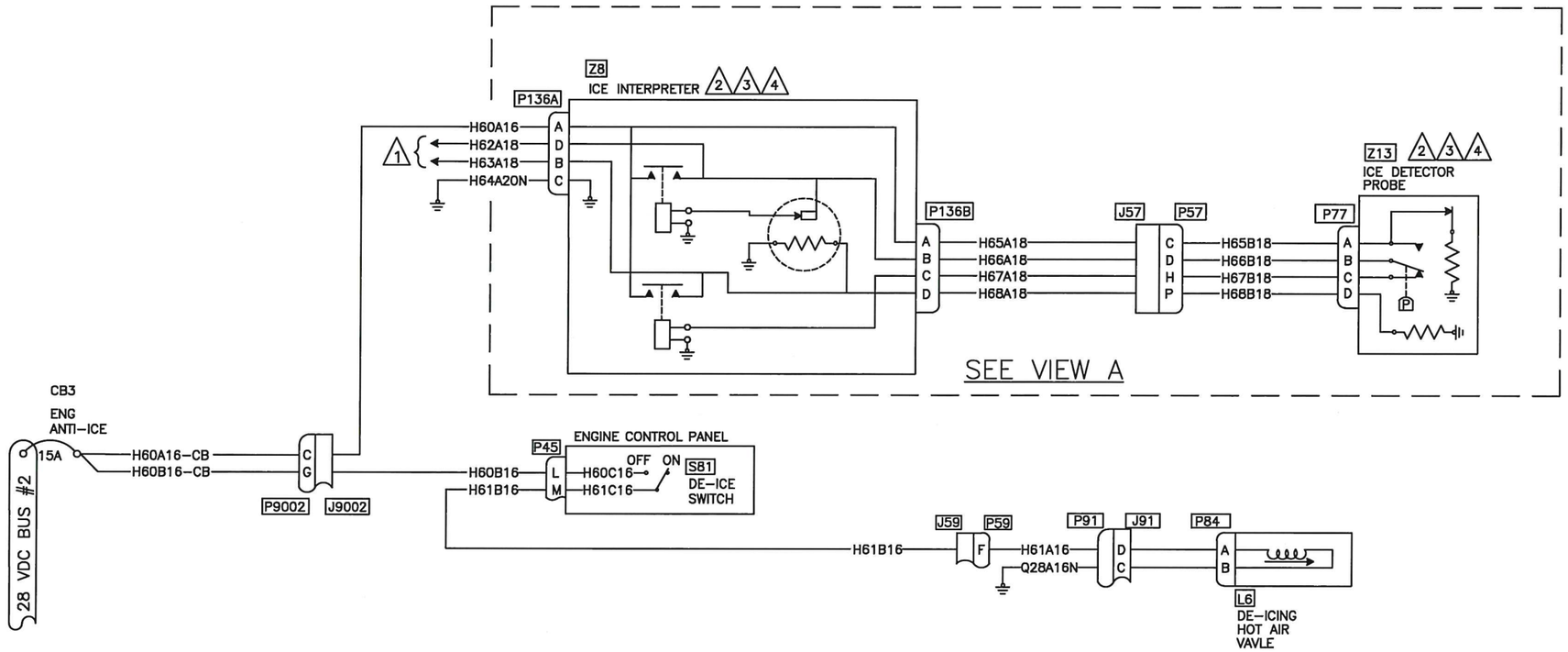

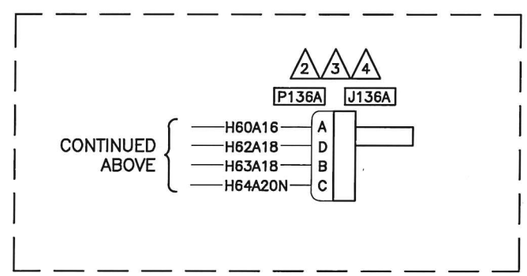

VIEW A

NOTES:

1. REFER TO MASTER CAUTION DIAGRAM 98-38S, SHEET 2
2. WIRING PROVISIONS ONLY
3. IF ICE DETECTION SYSTEM IS INSTALLED MASTER CAUTION PANEL P/N: D212-725-7-017 MUST BE USED.
4. (D) IF ICE DETECTION SYSTEM IS NOT INSTALLED MASTER CAUTION PANEL P/N: D212-725-7-017 OR D212-725-7-019/-021 MAY BE USED.

Figure 98-65S. ENGINE ANTI-ICING
(EFFECTIVE ON ALL S/N, EXCEPT 30687, 30931, 30576, 30817 & 30599)

RELEASED
ECN 20-105
2020.04.20

DESIGN	DRAWN BY	DART AEROSPACE LTD HAWKESBURY, ONTARIO, CANADA	
RD	WK		
CHECKED	APPROVED	DRAWING NO.	REV. D
KB	KB	D212-725-2-G2	SHEET 54 OF 57
DATE		TITLE	SCALE
20.03.20		FIGURE 98-65S	NTS

Copyright 2008 by DART AEROSPACE LTD

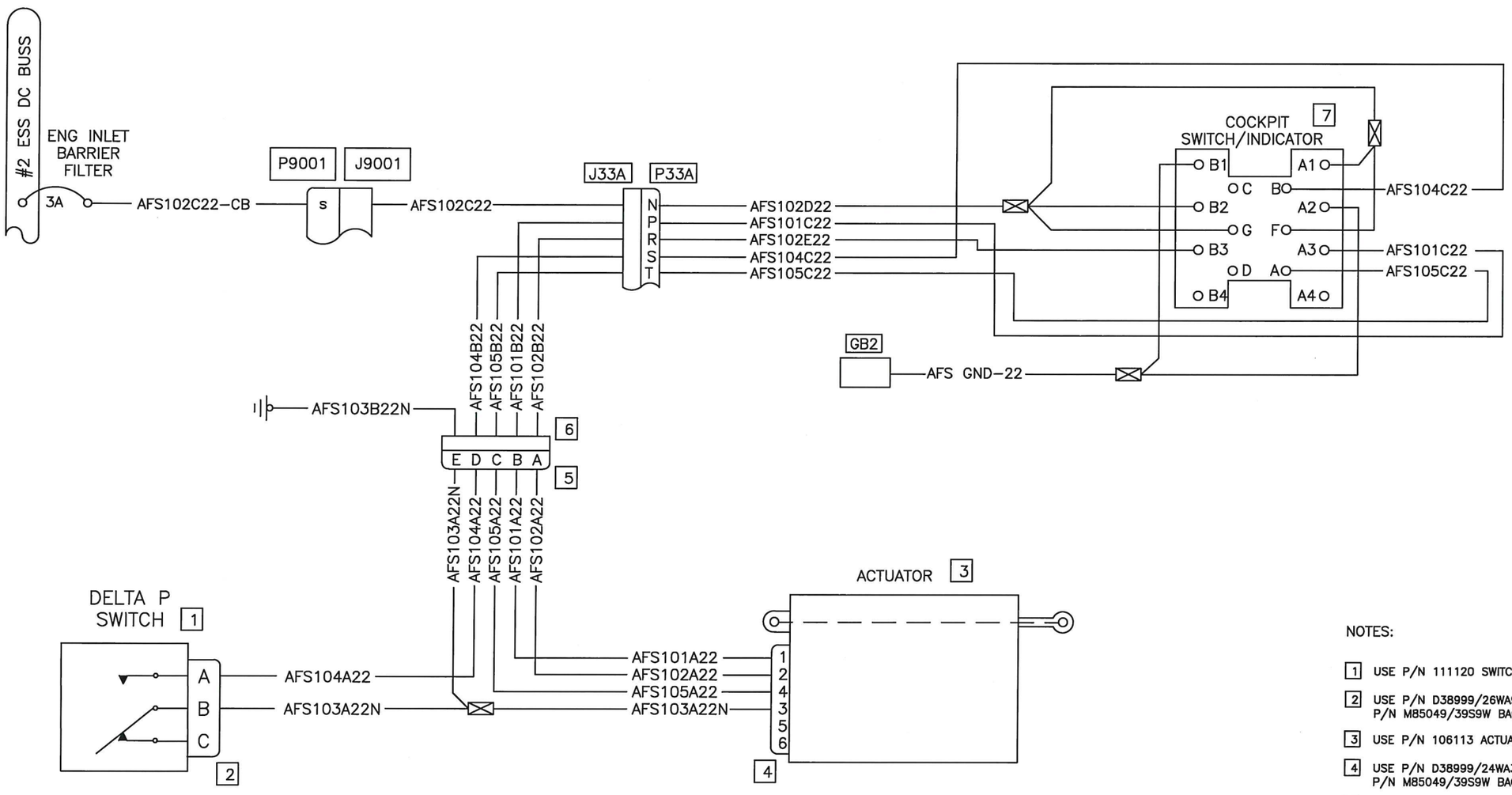

NOTES:

1. USE P/N 111120 SWITCH
2. USE P/N D38999/26WA98SA CONNECTOR AND P/N M85049/39S9W BACKSHELL
3. USE P/N 106113 ACTUATOR
4. USE P/N D38999/24WA35SN CONNECTOR AND P/N M85049/39S9W BACKSHELL
5. USE P/N D38999/26WB5PN CONNECTOR AND P/N M85049/39S9W BACKSHELL
6. USE P/N D38999/20WB5SN CONNECTOR AND P/N M85049/39S9W BACKSHELL
7. USE P/N LED-42-25-BB-31493 SWITCH/INDICATOR AND 18-200 CONNECTOR SUPPLIED WITH KIT

RELEASED
ECN 20-105
2020.09.20

THIS DOCUMENT CONTAINS INFORMATION OF A PROPRIETARY NATURE WHICH IS THE PROPERTY OF AEROSPACE FILTRATION SYSTEMS INC. CHANGES HAVE BEEN MADE TO ILLUSTRATE ADDITIONAL CONNECTORS AS INSTALLED IN EAGLE 'SINGLE'

AFS INLET BARRIER FILTER SYSTEM
(IF INSTALLED PER SH07-49)
(EFFECTIVE ON ALL S/N, EXCEPT 30687, 30931, 30576, 30817 & 30599)

DESIGN	DRAWN BY	DART AEROSPACE LTD HAWKESBURY, ONTARIO, CANADA	
RD	RD		
CHECKED	APPROVED	DRAWING NO.	REV. A
RD	KB	D212-725-2-G2	SHEET 55 OF 57
DATE		TITLE	SCALE
08.11.24		FIGURE 98-66S	NTS

Copyright 2008 by DART AEROSPACE LTD

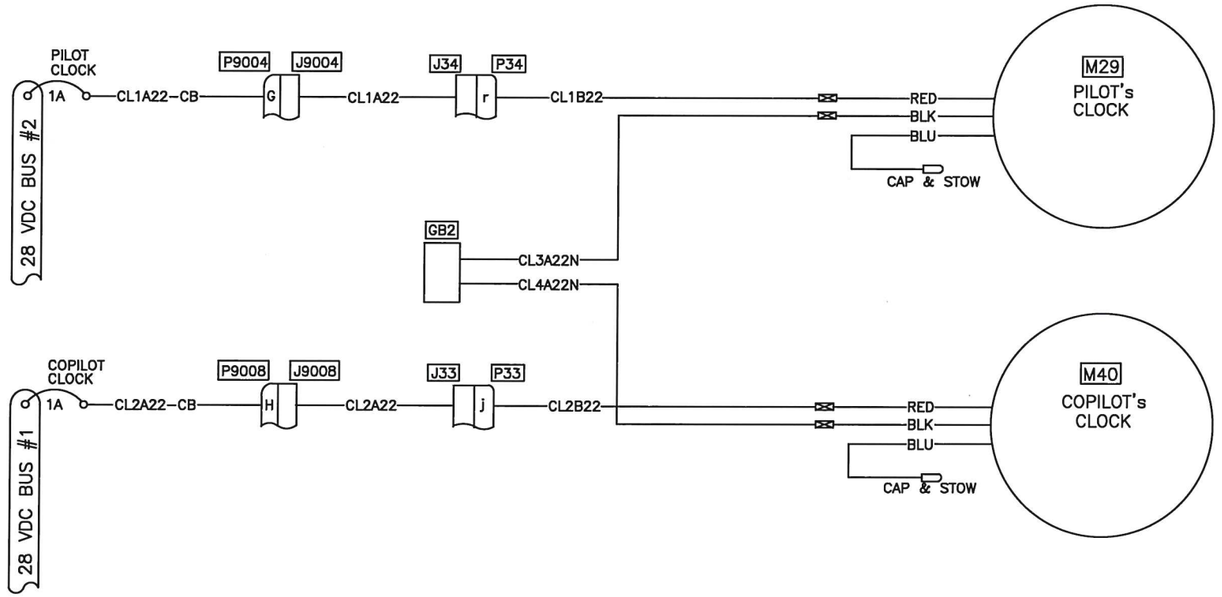

Figure 98-67S. PILOT AND COPILOT CLOCKS
(EFFECTIVE ON ALL S/N, EXCEPT 30687, 30931, 30576, 30817 & 30599)

RELEASED
ECN 20-105
2020.04.20

DESIGN RD	DRAWN BY RD	DART	DART AEROSPACE LTD HAWKESBURY, ONTARIO, CANADA
CHECKED RD	APPROVED KB	DRAWING NO. D212-725-2-G2	REV. A SHEET 56 OF 57
DATE 08.11.24		TITLE FIGURE 98-67S	SCALE NTS

Copyright 2008 by DART AEROSPACE LTD

27TB1 TERMINAL BLOCK HOOK-UP

TB1

	A	F	L51E20
L51C20	B	G	L51J20
L51B20	C	H	L51H20
L51K20	D	J	L51G20
L51D20	E	K	L51F20

TB2

	A	F	
	B	G	
	C	H	
	D	J	
	E	K	

TB3

L58B20	A	F	L58F20
L58D20	B	G	L58G20
L58C20	C	H	
	D	J	
L58E20	E	K	

TB4

L46G20	A	F	L46J20
L46D20	B	G	L46L20
	C	H	L46S20
L46M20	D	J	
L46W20	E	K	L46B20

TB5

L140B20	A	F	
L46V20	B	G	L46E20
L46X20	C	H	
L46T20	D	J	
	E	K	

TB6

	A	F	
	B	G	
	C	H	
W45B22	D	J	W45A22
W115B22	E	K	E36B22

TB7

W159A22	A	F	W153C22
W159D22	B	G	W153D22
CR89/CR90	C	H	CR90
W76B22	D	J	
CR89	E	K	

TB8

	A	F	D2C22
	B	G	D2E22
	C	H	D2F22
D2G22	D	J	D1D22
D1C22	E	K	D1E22

TB9

W115C22	A	F	W115B22
CR92	B	G	CR92
	C	H	W110B22
E59E22	D	J	E59C22
E59D22	E	K	E30F22

TB10

E58E22	A	F	
E58D22	B	G	
E58C22	C	H	
	D	J	
	E	K	

27TB2 TERMINAL BLOCK HOOK-UP

TB1

L88F22	A	F	L139D22
L88C22	B	G	L139B22
L88D22	C	H	L139A22
W159D22	D	J	W159C22
W159B22	E	K	

TB2

	A	F	
	B	G	
	C	H	
W104C22	D	J	W104E22
W135B22	E	K	W104D22

TB3

W104B22	A	F	W104C22
CR101	B	G	CR101
	C	H	
W26B22	D	J	W26C22
	E	K	W26D22

TB4

LL5J20	A	F	LL5K20
CR107	B	G	CR107
	C	H	CR104
M74C20	D	J	M74D20
M73D20	E	K	CR103

TB5

M74B20	A	F	M74C20
CR102	B	G	CR102
	C	H	
CR103	D	J	CR104
M73C20	E	K	W5A22

TB6

W5A22	A	F	CR106
CR105	B	G	CR105
	C	H	
W5B22	D	J	CR106
	E	K	W5C22

	A	F	
	B	G	
	C	H	
	D	J	
	E	K	

RELEASED
ECN 20-105
2020.04.20

Figure 98-68S. TERMINAL BLOCK HOOKUP
(EFFECTIVE ON ALL S/N, EXCEPT 30687, 30931, 30576, 30817 & 30599)

DESIGN RD	DRAWN BY RD	DART	DART AEROSPACE LTD HAWKESBURY, ONTARIO, CANADA
CHECKED RD	APPROVED KB	DRAWING NO. D212-725-2-G2	REV. A SHEET 57 OF 57
DATE 08.11.24		TITLE FIGURE 98-68S	SCALE NTS

Copyright 2008 by DART AEROSPACE LTD