REV	DESCRIPTION	INITIAL	YYYY-MM-DD
A	NEW ISSUE	EB	2021-09-09
B	TERMINAL BLOCK PINS REVISED	EB	2021-10-15

NEW WIRE / UNIT

EXISTING WIRE / UNIT

NOTES:

1. PERFORM ALL WORK IN ACCORDANCE WITH BELL HELICOPTER STANDARD PRACTICES MANUAL BHT-ELEC-SPM.
2. ALL NEW UNSHIELDED WIRE USE M22759/41-(XX)-9 OR EQUIVALENT TYPE WIRE. (M22759/41-(XX)-9 IS NOT INTENDED TO BE USED IN SOLDER APPLICATIONS, SOLDERABILITY CAN BE ACHIEVED WITH THE PROPER SOLDER. USE CRIMP SPLICES FOR REPAIR). ALL WIRES 22 AWG UNLESS OTHERWISE SPECIFIED BY WIRE CODE. ALL JUMPERS TO BE LESS THAN 6 INCHES.
3. ALL NEW SHIELDED WIRE USE M27500-(XX)SM(X)N23 OR EQUIVALENT TYPE WIRE. (M27500-(XX)SM(X)N23 IS NOT INTENDED TO BE USED IN SOLDER APPLICATIONS, SOLDERABILITY CAN BE ACHIEVED WITH THE PROPER SOLDER. USE CRIMP SPLICES FOR REPAIR). SOLDER SLEEVES SHALL USE SN96 SOLDER, USE P/N S200-X-00 OR EQUIVALENT.
4. ALL SHIELD TERMINATIONS SHALL BE INSTALLED PER MIL-S-83519 OR EQUIVALENT. SHIELD TERMINATIONS SHOWN AS "DAISY-CHAINED" ARE FOR DRAWING CLARITY ONLY. INDIVIDUAL SHIELD EXTENSIONS SHALL BE SPLICED AT A COMMON TIE POINT TO THE TERMINATING WIRES. THE BACK SHELL OR AIRFRAME GROUND MAY BE USED.
5. ALL AIRFRAME GROUNDS SHALL BE VIA AMP LUG OR GROUNDING BLOCK AND PROVIDE SEPARATE GROUND STUD LOCATIONS FOR DC POWER GROUNDS, AC POWER GROUNDS, CHASSIS GROUNDS, SIGNAL GROUNDS AND SHIELD GROUNDS.
6. ALL EQUIPMENT BONDING TO ADJACENT AIRFRAME STRUCTURE TO BE 0.003 OHM OR LESS. ALL ELECTRICAL GROUNDING AND BONDING TO BE INSTALLED IN ACCORDANCE WITH THE LATEST REVISION OF BHT-ELEC-SPM CHAPTER 8.
7. ALL TERMINALS TO BE INSTALLED IN ACCORDANCE WITH THE LATEST REVISION OF BHT-ELEC-SPM CHAPTER 4 PARAGRAPH 4-9.
8. ALL CONNECTORS TO BE INSTALLED IN ACCORDANCE WITH THE LATEST REVISION OF BHT-ELEC-SPM CHAPTER 5 AND / OR CIRCULAR CONNECTOR INSTALLATION INSTRUCTIONS (GARMIN DOCUMENT 190-00313-12). ENSURE ALL UNUSED CONNECTOR CONTACTS ARE FILLED WITH SPARE PINS/SOCKETS OR PLASTIC GROMMET SEALING PLUGS. ENSURE ALL BULKHEAD MOUNTED CONNECTORS ARE PROPERLY BONDED TO AIRFRAME.
9. ENSURE ALL SWITCHES, CIRCUIT BREAKERS, AND REMOTE MOUNTED BOXES ARE LABELED WITH A CONSISTENT SIZE, FONT, COLOR, BACKGROUND AND ARE ILLUMINATED CONSISTENT AS EXISTING LABELS.
10. ROUTE ALL WIRES AND CABLES WITH EXISTING WIRE ROUTES WHERE POSSIBLE AND CLAMP IN ACCORDANCE WITH THE LATEST REVISION OF BHT-ELEC-SPM CHAPTER 6. WIRES MUST BE ROUTED WITH A MINIMUM OF 6 INCHES OF SEPARATION FROM OXYGEN AND FLUID LINES (MIN 2 INCHES IF WIRES IN CONDUIT).
11. INSTALL SYSTEM IN ACCORDANCE WITH THE LATEST REVISION OF THE MANUFACTURERS INSTALLATION MANUAL.
12. LOWERCASE LETTER CONNECTOR PIN DESIGNATORS ARE SHOWN AS UNDERLINED UPPERCASE LETTERS.
13. INCLUDED IN KIT PN: 011-02325-02
14. INCLUDED IN KIT PN: 011-02326-02
15. THE CUMULATIVE COAX CABLE LENGTH BETWEEN LRU AND ANTENNA NOT TO EXCEED 50 FT WHEN USING P/N S44193 FOR GPS.
16. THE CUMULATIVE COAX CABLE LENGTH BETWEEN LRU AND ANTENNA NOT TO EXCEED 35 FT WHEN USING P/N RG142B FOR GPS.
17. POWER WIRES NOT TO EXCEED 20 FT FROM A 5A CIRCUIT BREAKER.

RELEASED
EC ECN 22-120
2022-02-24 MC

AVIONICS DESIGN SERVICES
APPROVED FOR RELEASE
BY DATE 20 OCT 2021
ORIGINAL IN RED

DESIGN	EB
DRAWN	EB
CHECKED	WK
MFG. APPR.	LJ / CD
DM RLSED.	
DE RLSED.	N/A
SCALE: NTS	
DATE: 2021-10-15	

EAGLE
CALGARY, ALBERTA, CANADA

TITLE: GARMIN 750 XI AND 650 XI WIRING DIAGRAM

NO: E2006-11-3

COPYRIGHT © 2021 BY EAGLE COPTERS MAINTENANCE LTD
THIS DOCUMENT IS PRIVATE AND CONFIDENTIAL AND IS SUPPLIED ON THE EXPRESS CONDITION THAT IT IS NOT TO BE USED FOR ANY PURPOSE OR COPIED OR COMMUNICATED TO ANY OTHER PERSON WITHOUT WRITTEN PERMISSION FROM EAGLE COPTERS MAINTENANCE LTD.

REV: B

SHEET 1 OF 5

BILL OF MATERIALS

ITEM	QTY PER	PART NUMBER	DESCRIPTION	POTENTIAL SUPPLIER	
1	1	011-04634-00	GTN 750 XI	GARMIN	
2	4	MS22073-5	CIRCUIT BREAKER, 5A	MIL SPEC	
3	2	330-00185-78	CONNECTOR, PLUG	GARMIN	13 14
4	2	330-00185-26	CONNECTOR, PLUG	GARMIN	13 14
5	2	330-00185-44	CONNECTOR, PLUG	GARMIN	13 14
6	2	330-00185-62	CONNECTOR, PLUG	GARMIN	13 14
7	AR (420)	336-00021-00	CONTACT, PIN	GARMIN	13 14
8	2	125-00085-00	BACKSHELL	GARMIN	13 14
9	2	125-00082-00	BACKSHELL	GARMIN	13 14
10	2	125-00083-00	BACKSHELL	GARMIN	13 14
11	2	125-00084-00	BACKSHELL	GARMIN	13 14
12	2	011-00979-03	KIT, CONFIGURATION MODULE	GARMIN	
13	--	NOT REQUIRED	NOT REQUIRED	NOT REQUIRED	
14	1	011-04631-00	GTN 650 XI	GARMIN	
15	1	CI 507	ANTENNA, DIPLEXER	COMANT	
16	1	ZFSC-2-1B+	COAXIAL POWER SPLITTER	MINI CIRCUITS	
17	1	CI-292-1	ANTENNA, GPS/COMM	COMANT	
18	REF (1)	DMN4-4	ANTENNA, VOR/LOC	DORNE AND MARGOLIN	
19	1	013-00235-00	ANTENNA, GPS	GARMIN	
20	1	CI-292-2	ANTENNA, COMM	COMANT	
21	AR (40)	S44193	CABLE, COAX	PIC	15
22	16	190112	CONNECTOR, BNC	PIC	
23	AR (20)	392404	CABLE, ETHERNET	CARLISLE	
24	1	RHT-615-0236	CONNECTOR, BULKHEAD TNC	AMHPENOL	
25	REF (1)	RGS10-48	ANTENNA, GLIDESLOPE	DAYTON-GRANGER	
26	6	190108	CONNECTOR, TNC	PIC	
27	1	011-00878-04	16 WATT COM ENABLEMENT CARD	GARMIN	
28	1	011-02045-41	SD DATACARD W/ NAVIGATION	GARMIN	
29	1	UG-914/U	CONNECTOR, BULKHEAD BNC	AMHPENOL	
30	AR (260)	M17/60-RG142	CABLE, COAX	MIL SPEC	16

ADS RELEASED

EAGLE
CALGARY, ALBERTA, CANADA

TITLE
GARMIN 750 XI AND 650 XI
WIRING DIAGRAM

DATE: 2021-10-15	DWG:	REV	SHEET
RELEASED:	E2006-11-3	B	2 OF 5

COPYRIGHT © 2021 BY EAGLE COPTERS MAINTENANCE LTD
THIS DOCUMENT IS PRIVATE AND CONFIDENTIAL AND IS SUPPLIED ON THE EXPRESS CONDITION THAT IT IS NOT TO BE USED FOR ANY PURPOSE OR COPIED OR COMMUNICATED TO ANY OTHER PERSON WITHOUT WRITTEN PERMISSION FROM EAGLE COPTERS MAINTENANCE LTD.

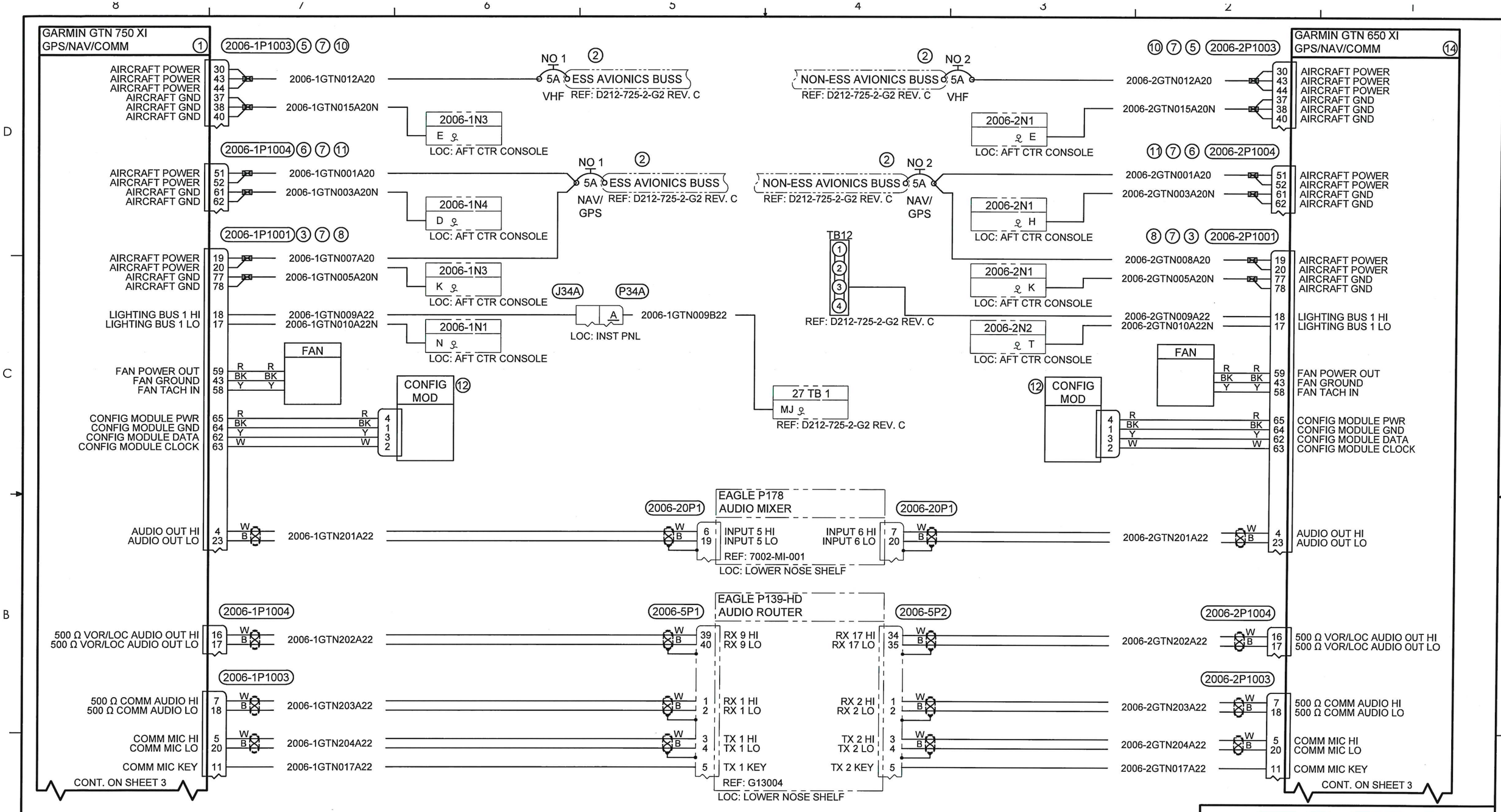

ADS RELEASED

EAGLE
CALGARY, ALBERTA, CANADA

TITLE
GARMIN 750 XI AND 650 XI
WIRING DIAGRAM

DATE: 2021-10-15	DWG:	REV	SHEET
RELEASED:	E2006-11-3	B	3 OF 5

COPYRIGHT © 2021 BY EAGLE COPTERS MAINTENANCE LTD
THIS DOCUMENT IS PRIVATE AND CONFIDENTIAL AND IS SUPPLIED ON THE EXPRESS CONDITION THAT IT IS NOT TO BE USED FOR ANY PURPOSE OR COPIED OR COMMUNICATED TO ANY OTHER PERSON WITHOUT WRITTEN PERMISSION FROM EAGLE COPTERS MAINTENANCE LTD.

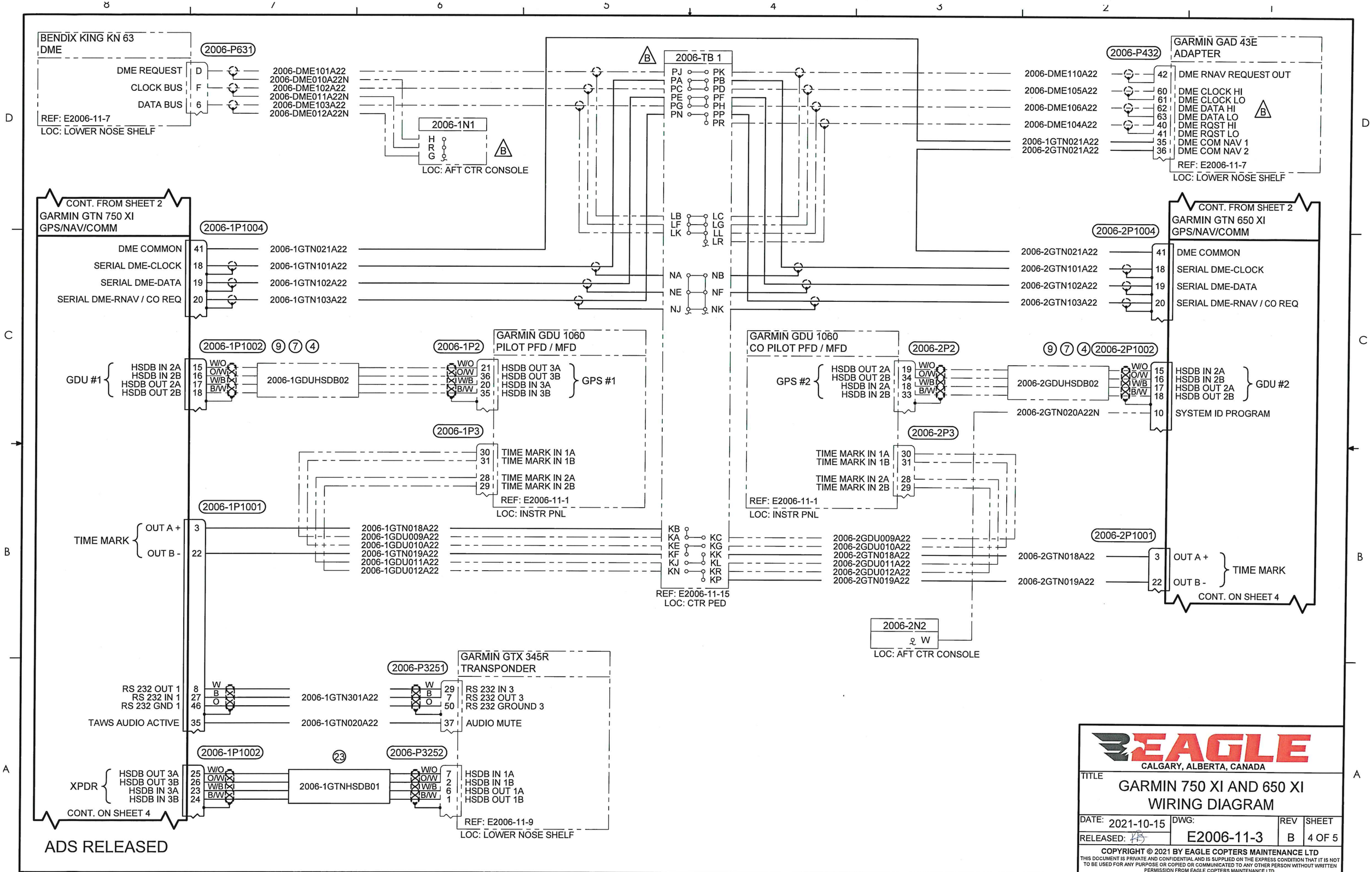
BENDIX KING KN 63 DME
2006-P631
DME REQUEST D
CLOCK BUS F
DATA BUS 6
REF: E2006-11-7
LOC: LOWER NOSE SHELF
2006-DME101A22
2006-DME010A22N
2006-DME102A22
2006-DME011A22N
2006-DME103A22
2006-DME012A22N
2006-1N1
H
R
G
LOC: AFT CTR CONSOLE
2006-TB 1
PJ PK
PA PB
PC PD
PE PF
PG PH
PN PP
PR
LB LC
LF LG
LK LL
LR
NA NB
NE NF
NJ NK
KB
KA KC
KE KG
KF KK
KJ KL
KN KR
KP
REF: E2006-11-15
LOC: CTR PED
GARMIN GAD 43E ADAPTER
2006-P432
2006-DME110A22 42 DME RNAV REQUEST OUT
2006-DME105A22 60 DME CLOCK HI
61 DME CLOCK LO
2006-DME106A22 62 DME DATA HI
63 DME DATA LO
2006-DME104A22 40 DME RQST HI
41 DME RQST LO
2006-1GTN021A22 35 DME COM NAV 1
2006-2GTN021A22 36 DME COM NAV 2
REF: E2006-11-7
LOC: LOWER NOSE SHELF
CONT. FROM SHEET 2
GARMIN GTN 750 XI GPS/NAV/COMM
2006-1P1004
DME COMMON 41 2006-1GTN021A22
SERIAL DME-CLOCK 18 2006-1GTN101A22
SERIAL DME-DATA 19 2006-1GTN102A22
SERIAL DME-RNAV / CO REQ 20 2006-1GTN103A22
CONT. FROM SHEET 2
GARMIN GTN 650 XI GPS/NAV/COMM
2006-2P1004
2006-2GTN021A22 41 DME COMMON
2006-2GTN101A22 18 SERIAL DME-CLOCK
2006-2GTN102A22 19 SERIAL DME-DATA
2006-2GTN103A22 20 SERIAL DME-RNAV / CO REQ
2006-1P1002
GDU #1
HSDB IN 2A 15
HSDB IN 2B 16
HSDB OUT 2A 17
HSDB OUT 2B 18
W/O O/W W/B B/W
2006-1GDUHSDB02
2006-1P2
GARMIN GDU 1060 PILOT PFD / MFD
HSDB OUT 3A 21
HSDB OUT 3B 36
HSDB IN 3A 20
HSDB IN 3B 35
GPS #1
GARMIN GDU 1060 CO PILOT PFD / MFD
2006-2P2
GPS #2
HSDB OUT 2A 19
HSDB OUT 2B 34
HSDB IN 2A 18
HSDB IN 2B 33
2006-2GDUHSDB02
2006-2P1002
HSDB IN 2A 15
HSDB IN 2B 16
HSDB OUT 2A 17
HSDB OUT 2B 18
GDU #2
2006-2GTN020A22N 10 SYSTEM ID PROGRAM
2006-1P3
TIME MARK IN 1A 30
TIME MARK IN 1B 31
TIME MARK IN 2A 28
TIME MARK IN 2B 29
REF: E2006-11-1
LOC: INSTR PNL
2006-2P3
TIME MARK IN 1A 30
TIME MARK IN 1B 31
TIME MARK IN 2A 28
TIME MARK IN 2B 29
REF: E2006-11-1
LOC: INSTR PNL
2006-1P1001
TIME MARK
OUT A + 3
OUT B - 22
2006-1GTN018A22
2006-1GDU009A22
2006-1GDU010A22
2006-1GTN019A22
2006-1GDU011A22
2006-1GDU012A22
2006-2GDU009A22
2006-2GDU010A22
2006-2GTN018A22
2006-2GDU011A22
2006-2GDU012A22
2006-2GTN019A22
2006-2P1001
2006-2GTN018A22 3 OUT A +
2006-2GTN019A22 22 OUT B -
TIME MARK
CONT. ON SHEET 4
2006-2N2
W
LOC: AFT CTR CONSOLE
GARMIN GTX 345R TRANSPONDER
2006-P3251
RS 232 OUT 1 8
RS 232 IN 1 27
RS 232 GND 1 46
2006-1GTN301A22
29 RS 232 IN 3
7 RS 232 OUT 3
50 RS 232 GROUND 3
TAWS AUDIO ACTIVE 35
2006-1GTN020A22
37 AUDIO MUTE
2006-1P1002
XPDR
HSDB OUT 3A 25
HSDB OUT 3B 26
HSDB IN 3A 23
HSDB IN 3B 24
2006-1GTNHSDB01
2006-P3252
HSDB IN 1A 7
HSDB IN 1B 2
HSDB OUT 1A 6
HSDB OUT 1B 1
REF: E2006-11-9
LOC: LOWER NOSE SHELF
CONT. ON SHEET 4
ADS RELEASED
EAGLE
CALGARY, ALBERTA, CANADA
TITLE
GARMIN 750 XI AND 650 XI WIRING DIAGRAM
DATE: 2021-10-15
DWG: E2006-11-3
REV B
SHEET 4 OF 5
RELEASED:
COPYRIGHT © 2021 BY EAGLE COPTERS MAINTENANCE LTD
THIS DOCUMENT IS PRIVATE AND CONFIDENTIAL AND IS SUPPLIED ON THE EXPRESS CONDITION THAT IT IS NOT TO BE USED FOR ANY PURPOSE OR COPIED OR COMMUNICATED TO ANY OTHER PERSON WITHOUT WRITTEN PERMISSION FROM EAGLE COPTERS MAINTENANCE LTD.

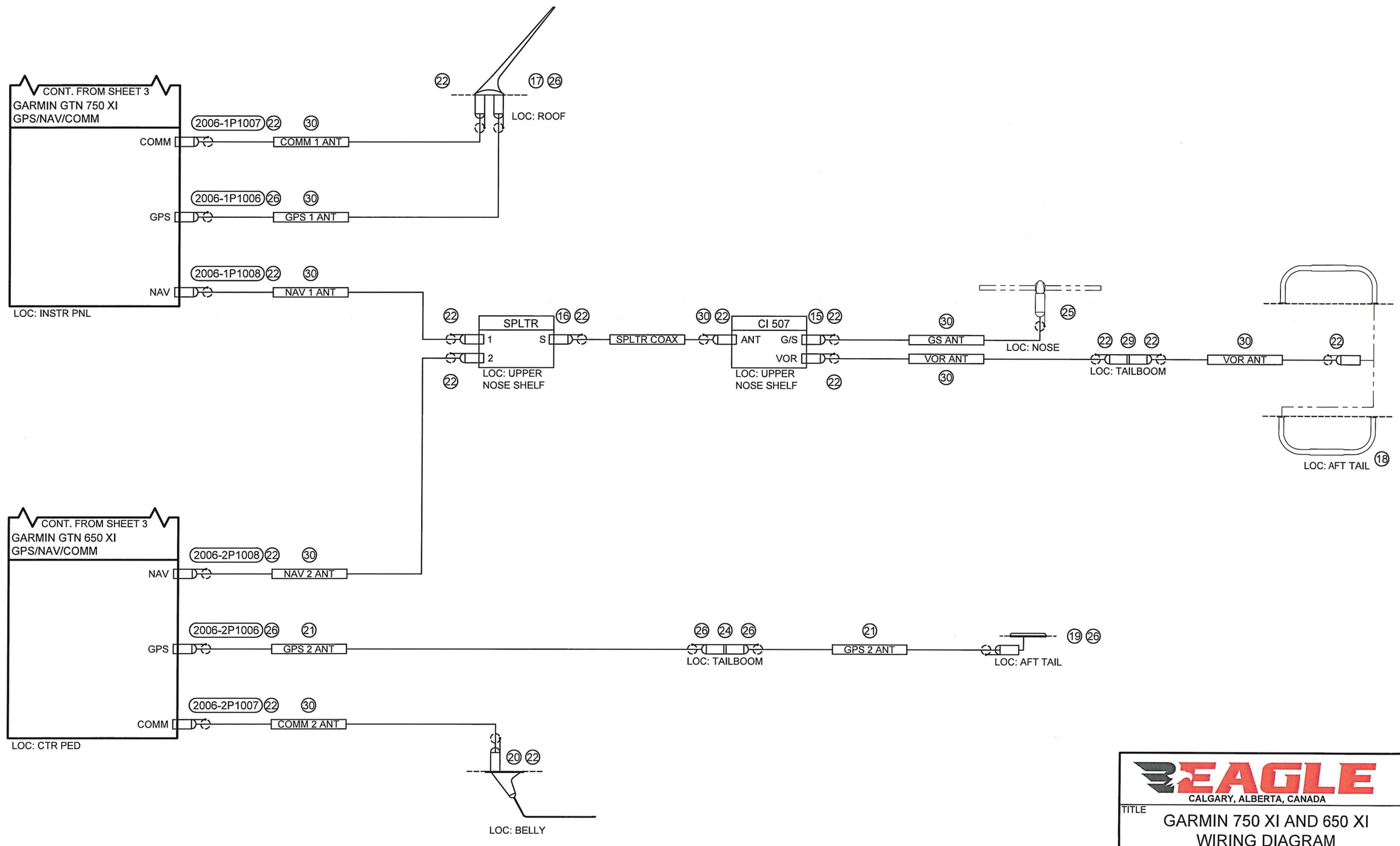

ADS RELEASED

EAGLE
CALGARY, ALBERTA, CANADA

TITLE
GARMIN 750 XI AND 650 XI
WIRING DIAGRAM

DATE: 2021-10-15	DWG:	REV	SHEET
RELEASED: KB	E2006-11-3	B	5 OF 5

COPYRIGHT © 2021 BY EAGLE COPTERS MAINTENANCE LTD
THIS DOCUMENT IS PRIVATE AND CONFIDENTIAL AND IS SUPPLIED ON THE EXPRESS CONDITION THAT IT IS NOT TO BE USED FOR ANY PURPOSE OR COPIED OR COMMUNICATED TO ANY OTHER PERSON WITHOUT WRITTEN PERMISSION FROM EAGLE COPTERS MAINTENANCE LTD.