Eagle Copters Ltd.
823 McTavish Road NE
Calgary, AB, T2E 7G9
Canada

Tel: 1 403 250 7370

http://www.eaglecopters.com



INSTRUCTIONS FOR CONTINUED AIRWORTHINESS

ICA-D212-725

Eagle Single

SINGLE ENGINE CONVERSION OF BELL MODEL 212 HELICOPTERS

Prepared By: Adam Stenger
A. Stenger

Reviewed By:
T. Block

Released By:
M. Peters

• COPYRIGHT © 2023 BY EAGLE COPTERS MAINTENANCE LTD •
THIS DOCUMENT IS PRIVATE AND CONFIDENTIAL AND IS SUPPLIED ON THE EXPRESS CONDITION THAT IT IS NOT TO BE USED FOR ANY PURPOSE OR COPIED OR COMMUNICATED TO ANY OTHER PERSON WITHOUT WRITTEN PERMISSION FROM EAGLE COPTERS MAINTENANCE LTD.

Revision: **9**
Date: 23.02.10

CHAPTER 01 – INTRODUCTION (01-00-00)

REVISION RECORD

Revision No.	Issue Date	Description	Date Inserted	Inserted By
0	07.05.31	New Issue		
1	07.11.30	Revision		
2	08.12.01	Revision		
3	09.05.20	Revision		
4	11.06.01	Revision		
5	12.06.20	Revision		
6	13.08.26	Revision		
7	19.04.23	Revision		
8	22.01.17	Revision		
9	23.02.10	Removed S/Ns 30576 & 30931 from G1 lists. Added new TB's and revised existing TB's.		

• COPYRIGHT © 2023 BY EAGLE COPTERS MAINTENANCE LTD •
THIS DOCUMENT IS PRIVATE AND CONFIDENTIAL AND IS SUPPLIED ON THE EXPRESS CONDITION THAT IT IS NOT TO BE USED FOR ANY PURPOSE OR COPIED OR COMMUNICATED TO ANY OTHER PERSON WITHOUT WRITTEN PERMISSION FROM EAGLE COPTERS MAINTENANCE LTD.

CHAPTER 01 – INTRODUCTION (01-00-00)

SERVICE BULLETIN RECORD

DSB NUMBER	SUBJECT	REQUIREMENT
DSB-D212-725-1	FAA Certification	Mandatory
DSB-D212-725-2	LH Instruments	Optional
DSB-D212-725-3	AC Torquemeter	Optional
DSB-D212-725-4	Interconnect Valve Replacement	Optional
DSB-D212-725-5	Alternative Altimeter	Optional
DSB-D212-725-6	Pilot Collective Cable	Mandatory
DSB-D212-725-7	Alternate Drainline	Optional

• COPYRIGHT © 2023 BY EAGLE COPTERS MAINTENANCE LTD •
THIS DOCUMENT IS PRIVATE AND CONFIDENTIAL AND IS SUPPLIED ON THE EXPRESS CONDITION THAT IT IS NOT TO BE USED FOR ANY PURPOSE OR COPIED OR COMMUNICATED TO ANY OTHER PERSON WITHOUT WRITTEN PERMISSION FROM EAGLE COPTERS MAINTENANCE LTD.

CHAPTER 01 – INTRODUCTION (01-00-00)

LIST OF EFFECTIVE PAGES

Section	Page	Revision #
01	1	9
01	2	9
01	3	9
01	4	9
01	5	9
01	6	9
01	7	9
01	8	9
01	9	9
01	10	9
01	11	9
01	12	9
01	13	9
01	14	9
01	15	9
01	16	9
01	17	9
04	1	0
04	2	0
05	1	9
05	2	9
05	3	9
05	4	9
05	5	9
05	6	9
05	7	9
05	8	9
05	9	9
05	10	9
05	11	9
05	12	9
05	13	9
05	14	9
05	15	9
05	16	9
05	17	9
05	18	9
05	19	9
05	20	9
05	21	9
05	22	9
05	23	9
05	24	9
05	25	9
05	26	9
06	1	0
06	2	0
06	3	0
06	4	0
06	5	0
06	6	0
07	1	1
08	1	0
08	2	0
08	3	0
08	4	0
08	5	0
08	6	0
08	7	0
08	8	0
08	9	0
08	10	0
08	11	0
08	12	1
08	13	0
08	14	1
09	1	1
10	1	1
11	1	6
11	2	6
11	3	6
11	4	6
11	5	9
11	6	6
11	7	6
11	8	6
11	9	6
11	10	6
11	11	6
11	12	6
11	13	6
11	14	6
11	15	6
11	16	6
11	17	6
11	18	6
11	19	6
11	20	9
12	1	6
12	2	6
12	3	6
12	4	6
12	5	6
12	6	6
12	7	6
12	8	6
12	9	6
12	10	6
12	11	6
12	12	6
12	13	6
12	14	6
12	15	6
12	16	6
12	17	6
12	18	6
12	19	6
12	20	6
12	21	6
12	22	6
12	23	6
12	24	6
18	1	1

• COPYRIGHT © 2023 BY EAGLE COPTERS MAINTENANCE LTD •
THIS DOCUMENT IS PRIVATE AND CONFIDENTIAL AND IS SUPPLIED ON THE EXPRESS CONDITION THAT IT IS NOT TO BE USED FOR ANY PURPOSE OR COPIED OR COMMUNICATED TO ANY OTHER PERSON WITHOUT WRITTEN PERMISSION FROM EAGLE COPTERS MAINTENANCE LTD.

CHAPTER 01 – INTRODUCTION (01-00-00)

LIST OF EFFECTIVE PAGES

Section	Page	Revision #
21	1	4
21	2	4
21	3	4
21	4	4
21	5	4
21	6	4
21	7	4
21	8	4
21	9	4
21	10	4
21	11	4
21	12	4
21	13	4
21	14	4
25	1	1
26	1	5
26	2	5
26	3	5
26	4	5
26	5	5
26	6	5
26	7	5
26	8	5
26	9	5
26	10	5
26	11	5
28	1	6
28	2	6
28	3	6
28	4	6
28	5	6
28	6	6
28	7	6
28	8	6
28	9	6
28	10	6
28	11	6
28	12	6
28	13	6
28	14	6
28	15	6
28	16	6
28	17	6
28	18	6
28	19	6
28	20	6
28	21	6
28	22	6
28	23	6
28	24	6
28	25	6
28	26	6
28	27	6
28	28	6
28	29	6
28	30	6
28	31	6
28	32	6
28	33	6
28	34	6
28	35	6
28	36	6
28	37	6
28	38	6
28	39	6
28	40	6
28	41	6
28	42	6
28	43	6
28	44	6
28	45	6
28	46	6
28	47	6
28	48	6
29	1	6
29	2	6
29	3	6
29	4	6
29	5	6
29	6	6
29	7	6
29	8	6
29	9	6
29	10	6
29	11	6
29	12	6
29	13	6
29	14	6
29	15	6
29	16	6
29	17	6
29	18	6
29	19	6
29	20	6
29	21	6
29	22	6
29	23	6
29	24	6
29	25	6
29	26	6
29	27	6
29	28	6
29	29	6
29	30	6
29	31	6
29	32	6
29	33	6
29	34	6
29	35	6
29	36	6
29	37	6
29	38	6
29	39	6
29	40	6
29	41	6
29	42	6
29	43	6
29	44	6
29	45	6
29	46	6
29	47	6
29	48	6
29	49	6
29	50	6

• COPYRIGHT © 2023 BY EAGLE COPTERS MAINTENANCE LTD •
THIS DOCUMENT IS PRIVATE AND CONFIDENTIAL AND IS SUPPLIED ON THE EXPRESS CONDITION THAT IT IS NOT TO BE USED FOR ANY PURPOSE OR COPIED OR COMMUNICATED TO ANY OTHER PERSON WITHOUT WRITTEN PERMISSION FROM EAGLE COPTERS MAINTENANCE LTD.

CHAPTER 01 – INTRODUCTION (01-00-00)

LIST OF EFFECTIVE PAGES

Section	Page	Revision #
30	1	1
32	1	1
52	1	4
52	2	4
52	3	4
52	4	4
52	5	4
52	6	4
52	7	4
52	8	4
52	9	4
52	10	4
52	11	4
52	12	4
52	13	4
52	14	4
52	15	4
52	16	4
52	17	4
52	18	4
52	19	4
52	20	4
52	21	4
52	22	4
52	23	4
52	24	4
52	25	4
52	26	4
52	27	4
52	28	4
52	29	4
52	30	4
52	31	4
52	32	4
52	33	4
52	34	4
52	35	4
52	36	4
52	37	4
52	38	4
52	39	4
52	40	4
52	41	4
52	42	4
52	43	4
52	44	4
52	45	4
52	46	4
52	47	4
52	48	4
52	49	4
52	50	4
52	51	4
52	52	4
52	53	4
52	54	4
53	1	4
53	2	4
53	3	4
53	4	4
53	5	4
53	6	4
53	7	4
53	8	4
53	9	4
53	10	4
53	11	4
53	12	4
53	13	4
53	14	4
53	15	4
53	16	4
53	17	4
53	18	4
53	19	4
62	1	1
63	1	6
63	2	6
63	3	6
63	4	6
63	5	6
63	6	6
63	7	6
63	8	6
63	9	6
63	10	6
63	11	6
63	12	6
63	13	6
63	14	6
63	15	6
63	16	6
63	17	6
63	18	6
63	19	6
63	20	6
63	21	6
63	22	6
63	23	6
63	24	6
63	25	6
63	26	6
63	27	6
63	28	6
63	29	6
63	30	6
63	31	6
63	32	6
63	33	6
63	34	6
63	35	6
63	36	6
63	37	6
63	38	6
63	39	6
63	40	6
63	41	6
63	42	6
63	43	6
63	44	6
63	45	6
63	46	6

• COPYRIGHT © 2023 BY EAGLE COPTERS MAINTENANCE LTD •
THIS DOCUMENT IS PRIVATE AND CONFIDENTIAL AND IS SUPPLIED ON THE EXPRESS CONDITION THAT IT IS NOT TO BE USED FOR ANY PURPOSE OR COPIED OR COMMUNICATED TO ANY OTHER PERSON WITHOUT WRITTEN PERMISSION FROM EAGLE COPTERS MAINTENANCE LTD.

CHAPTER 01 – INTRODUCTION (01-00-00)

LIST OF EFFECTIVE PAGES

Section	Page	Revision #
63	47	6
63	48	6
63	49	6
63	50	6
63	51	6
63	52	6
63	53	6
63	54	6
63	55	6
63	56	6
63	57	6
63	58	6
63	59	6
63	60	6
63	61	6
63	62	6
63	63	6
63	64	6
63	65	6
63	66	6
63	67	6
63	68	6
63	69	6
63	70	6
63	71	6
63	72	6
63	73	6
63	74	6
63	75	6
63	76	6
63	77	6
63	78	6
63	79	6
63	80	6
63	81	6
63	82	6
63	83	6
63	84	6
63	85	6
63	86	6
63	87	6
63	88	6
63	99	6
63	90	6
63	91	6
63	92	6
63	93	6
63	94	6
63	95	6
63	96	6
63	97	6
63	98	6
63	99	6
63	100	6
63	101	6
63	102	6
63	103	6
63	104	6
63	105	6
63	106	6
63	107	6
63	108	6
63	109	6
63	110	6
63	111	6
63	112	6
63	113	6
63	114	6
63	115	6
63	116	6
63	117	6
63	118	6
63	119	6
63	121	6
63	122	6
63	123	6
63	124	6
63	125	6
63	126	6
63	127	6
63	128	6
63	129	6
63	130	6
63	131	6
63	132	6
63	133	6
63	134	6
63	135	6
63	136	6
63	137	6
63	138	6
63	139	6
63	140	6
63	141	6
63	142	6
63	143	6
63	144	6
64	1	1
65	1	1
67	1	6
67	2	6
67	3	6
67	4	6
67	5	6
67	6	6
67	7	6
67	8	6
67	9	6
67	10	6
67	11	6
67	12	6
67	13	6
67	14	6
67	15	6
67	16	6
67	17	6
67	18	6
67	19	6
67	20	6
67	21	6
67	22	6
67	23	6
67	24	6
67	25	6
67	26	6
67	27	6

• COPYRIGHT © 2023 BY EAGLE COPTERS MAINTENANCE LTD •
THIS DOCUMENT IS PRIVATE AND CONFIDENTIAL AND IS SUPPLIED ON THE EXPRESS CONDITION THAT IT IS NOT TO BE USED FOR ANY PURPOSE OR COPIED OR COMMUNICATED TO ANY OTHER PERSON WITHOUT WRITTEN PERMISSION FROM EAGLE COPTERS MAINTENANCE LTD.

CHAPTER 01 – INTRODUCTION (01-00-00)

LIST OF EFFECTIVE PAGES

Section	Page	Revision #
67	28	6
67	29	6
67	30	6
67	31	6
67	32	6
67	33	6
67	34	6
67	35	6
67	36	6
67	37	6
67	38	6
67	39	6
67	40	6
67	41	6
67	42	6
67	43	6
67	44	6
67	45	6
67	46	6
67	47	6
67	48	6
67	49	6
67	50	6
67	51	6
67	52	6
67	53	6
67	54	6
67	55	6
71	1	5
71	2	5
71	3	5
71	4	5
71	5	5
71	6	5
71	7	5
71	8	5
71	9	5
71	10	5
71	11	5
71	12	5
71	13	5
71	14	5
71	15	5
71	16	5
71	17	5
71	18	5
71	19	5
71	20	5
71	21	5
71	22	5
71	23	5
71	24	5
71	25	5
71	26	5
71	27	5
71	28	5
76	1	0
76	2	0
76	3	0
76	4	0
76	5	0
76	6	0
76	7	0
76	8	0
76	9	0
76	10	0
76	11	0
76	12	0
76	13	0
76	14	0
76	15	0
76	16	0
76	17	0
76	18	0
76	19	0
76	20	0
76	21	0
79	1	0
79	2	0
79	3	0
79	4	0
79	5	0
79	6	0
79	7	0
79	8	0
79	9	0
79	10	0
95	1	9
95	2	9
95	3	9
95	4	9
95	5	9
95	6	9
95	7	9
95	8	9
95	9	9
95	10	9
95	11	9
95	12	9
95	13	9
95	14	9
95	15	9
95	16	9
95	17	9
95	18	9
95	19	9
95	20	9
96	1	9
96	2	9
96	3	9
96	4	9
96	5	9
96	6	9
96	7	9
96	8	9
96	9	9
96	10	9
96	11	9
96	12	9
96	13	9
96	14	9
96	15	9

• COPYRIGHT © 2023 BY EAGLE COPTERS MAINTENANCE LTD •
THIS DOCUMENT IS PRIVATE AND CONFIDENTIAL AND IS SUPPLIED ON THE EXPRESS CONDITION THAT IT IS NOT TO BE USED FOR ANY PURPOSE OR COPIED OR COMMUNICATED TO ANY OTHER PERSON WITHOUT WRITTEN PERMISSION FROM EAGLE COPTERS MAINTENANCE LTD.

CHAPTER 01 – INTRODUCTION (01-00-00)

LIST OF EFFECTIVE PAGES

Section	Page	Revision #
96	16	9
96	17	9
96	18	9
96	19	9
96	20	9
96	21	9
96	22	9
96	23	9
96	24	9
96	25	9
96	26	9
96	27	9
96	28	9
96	29	9
96	30	9
96	31	9
96	32	9
96	33	9
96	34	9
96	35	9
96	36	9
96	37	9
96	38	9
96	39	9
96	40	9
96	41	9
96	42	9
96	43	9
96	44	9
96	45	9
96	46	9
96	47	9
96	48	9
96	49	9
96	50	9
96	51	9
96	52	9
96	53	9
96	54	9
96	55	9
96	56	9
96	57	9
96	58	9
96	59	9
96	60	9
96	61	9
96	62	9
96	63	9
96	64	9
96	65	9
96	66	9
96	67	9
96	68	9
96	69	9
96	70	9
96	71	9
96	72	9
96	73	9
96	74	9
96	75	9
96	76	9
96	77	9
96	78	9
96	79	9
96	80	9
96	81	9
96	82	9
96	83	9
96	84	9
96	85	9
96	86	9
96	87	9
96	88	9
96	89	9
96	90	9
96	91	9
96	92	9
96	93	9
97	1	9
97	2	9
97	3	9
97	4	9
97	5	9
97	6	9
97	7	9
97	8	9
97	9	9
97	10	9
98	1	9
98	2	9
98	3	9
98	4	9
98	5	9
98	6	9
98	7	9
98	8	9
98	9	9
98	10	9
98	11	9
98	12	9
98	13	9
98	14	9
98	15	9
98	16	9
98	17	9
98	18	9
98	19	9
98	20	9
98	21	9

• COPYRIGHT © 2023 BY EAGLE COPTERS MAINTENANCE LTD •
THIS DOCUMENT IS PRIVATE AND CONFIDENTIAL AND IS SUPPLIED ON THE EXPRESS CONDITION THAT IT IS NOT TO BE USED FOR ANY PURPOSE OR COPIED OR COMMUNICATED TO ANY OTHER PERSON WITHOUT WRITTEN PERMISSION FROM EAGLE COPTERS MAINTENANCE LTD.

CHAPTER 01 – INTRODUCTION (01-00-00)

Table of Contents

Chapter 01 – Introduction.....(01-00-00)
Chapter 04 – Airworthiness Limitations .....(04-00-00)
Chapter 05 – Inspection and Component Overhaul Schedule .....(05-00-00)
Chapter 06 – Dimensions and Areas .....(06-00-00)
Chapter 07 – Lifting and Jacking .....(07-00-00)
Chapter 08 – Weight and Balance .....(08-00-00)
Chapter 09 – Towing.....(09-00-00)
Chapter 10 – Packing and Mooring .....(10-00-00)
Chapter 11 – Placards and Markings.....(11-00-00)
Chapter 12 – Servicing.....(12-00-00)
Chapter 18 – Vibration and noise Analysis .....(18-00-00)
Chapter 21 – Air Distribution (Ventilation).....(21-00-00)
Chapter 25 – Equipment and Furnishings .....(25-00-00)
Chapter 26 – Fire Protection .....(26-00-00)
Chapter 28 – Fuel System.....(28-00-00)
Chapter 29 – Hydraulic System .....(29-00-00)
Chapter 30 – Ice and Rain Protection.....(30-00-00)
Chapter 32 – Landing Gear.....(32-00-00)
Chapter 52 – Doors and Windows .....(52-00-00)
Chapter 53 – Fuselage.....(53-00-00)
Chapter 62 – Main Rotor.....(62-00-00)
Chapter 63 – Main Rotor Drive System .....(63-00-00)
Chapter 64 – Tail Rotor.....(64-00-00)
Chapter 65 – Tail Rotor Drive System .....(65-00-00)
Chapter 67 – Flight Controls .....(67-00-00)
Chapter 71 – Power Plant System.....(71-00-00)
Chapter 76 – Engine Controls.....(76-00-00)
Chapter 79 – Engine Oil System.....(79-00-00)
Chapter 95 – Instrument System .....(95-00-00)
Chapter 96 – Electrical System.....(96-00-00)
Chapter 97 – Avionics .....(97-00-00)
Chapter 98 – Wiring Diagrams.....(98-00-00)

• COPYRIGHT © 2023 BY EAGLE COPTERS MAINTENANCE LTD •
THIS DOCUMENT IS PRIVATE AND CONFIDENTIAL AND IS SUPPLIED ON THE EXPRESS CONDITION THAT IT IS NOT TO BE USED FOR ANY PURPOSE OR COPIED OR COMMUNICATED TO ANY OTHER PERSON WITHOUT WRITTEN PERMISSION FROM EAGLE COPTERS MAINTENANCE LTD.

CHAPTER 01 – INTRODUCTION (01-00-00)

1.1 Introduction

This manual contains the Instructions for Continued Airworthiness for a Bell Model 212 helicopter modified per STC SH07-28/SR02831NY. With the exception of Chapter 04 and Chapter 05, where an Eagle Single maintenance requirement differs from a Bell 212 maintenance requirement, the entire chapter is reproduced in this manual with the appropriate changes. Chapter 04 and 05 of this ICA supplement the material in Chapters 04 and 05 of the BHT-212-MM. Where a chapter of BHT-212-MM still applies in its entirety, the reader must refer to BHT-212-MM as instructed in the applicable chapter cover page. This manual must be used in conjunction with the Bell Helicopter Textron Manual BHT-212-MM and Honeywell Maintenance Manual Gas Turbine Engine Model No. T5317A/B Report No. 330.2

1.2 Use of the Manual

1.2.1 General

This Chapter provides a general description of the contents and use of this ICA and the Eagle “Single” Helicopter.

Generally, maintenance procedures for components or assemblies which have been removed from the helicopter are contained in either BHT-212-CR&O Component Repair & Overhaul Manual or BHT-205A1-CR&O.

1.2.2 Use of the Manual

This manual is divided into Chapters. Refer to the desired Chapter and using the tabbed pages provided which separate each Chapter, refer to the Table of Contents at the beginning of the desired Chapter to locate the specific subject.

1.2.3 Updates

All updates to this manual will be provided to any operator who possesses this STC. Additionally, any changes will be sent to Transport Canada. All changes will be recorded in the Revision Record at the front of this manual.

As necessary, Dart Service Bulletins (DSB) will be issued. These documents provide information to modify components or systems on the helicopter. Refer to Bulletin Record, in the front of this manual. Additional space is provided for listing TBs and ASBs which are incorporated by the owner/operator.

As a general rule, Airworthiness Directives that apply to the Bell 212 aircraft continue to apply to the Bell 212 with STC 07-28/SR02831NY incorporated unless the part or equipment that they reference has been removed as part of the modification. For example, part of the modification is the installation of “pop out” style emergency windows. Therefore all ADs that reference Bell style emergency escape “panels” are not applicable. Likewise, ADs that apply to the Pratt and Whitney engines no longer apply and ADs that apply

• COPYRIGHT © 2023 BY EAGLE COPTERS MAINTENANCE LTD •
THIS DOCUMENT IS PRIVATE AND CONFIDENTIAL AND IS SUPPLIED ON THE EXPRESS CONDITION THAT IT IS NOT TO BE USED FOR ANY PURPOSE OR COPIED OR COMMUNICATED TO ANY OTHER PERSON WITHOUT WRITTEN PERMISSION FROM EAGLE COPTERS MAINTENANCE LTD.

CHAPTER 01 – INTRODUCTION (01-00-00)
to the Honeywell T5317 series engines do apply. As part of the modification all applicable ADs have been addressed. If confusion regarding applicability exist when new Bell 212, 205, or Honeywell T5317 series ADs are issued the operator/maintainer should contact Eagle Copters for clarification. Owner/operators of aircraft incorporating this STC will be notified of Airworthiness Directives that may apply to their helicopter because of this STC but may not appear on the Transport Canada website because of their airframe applicability. Owners/operators of aircraft modified per SH07-28/SR02831NY should also consult ADR-D212-725-1 and SBR-D212-725-1 at www.dartaero.com.

1.2.4 Consumable Materials

WARNING

HANDLING AND STORAGE OF CONSUMABLE MATERIALS SHALL BE IN ACCORDANCE WITH MANUFACTURERS INSTRUCTIONS UNLESS OTHERWISE NOTED IN APPLICABLE MAINTENANCE TASKS.

Consumable materials required while performing maintenance are listed in the text by name and an item number such as “solvent (C-304)”. The number refers to item 304 in Chapter 13 of BHT-ALL-SPM, Standard Practices Manual. In addition, a list of all consumable materials (by item number and full nomenclature) required for each individual Chapter may be provided following the Table of Contents for that Chapter.

Occasionally, materials used in maintenance change properties, suppliers, or are discontinued. Also, new and more advanced materials become available. In the event of conflict between this manual and the Standard Practices manual, the manual with the latest date of issue list the preferred material. However, either material may be used for the accomplishment of the prescribed task unless specifically stated otherwise.

1.2.5 Special Tools

Certain maintenance procedures require the use of special tools. Special tools required are listed at the beginning of the applicable maintenance paragraph. A complete description and illustration of these tools is provided in BHT-TOOL-IPC.

1.2.6 Torques

Torques are specified as either standard or special within this manual. Standard torque values for various type fasteners will be found in BHT-ALL-SPM. Where applicable, special torques are specified within the text (or on illustrations) within this manual.

• COPYRIGHT © 2023 BY EAGLE COPTERS MAINTENANCE LTD •
THIS DOCUMENT IS PRIVATE AND CONFIDENTIAL AND IS SUPPLIED ON THE EXPRESS CONDITION THAT IT IS NOT TO BE USED FOR ANY PURPOSE OR COPIED OR COMMUNICATED TO ANY OTHER PERSON WITHOUT WRITTEN PERMISSION FROM EAGLE COPTERS MAINTENANCE LTD.

CHAPTER 01 – INTRODUCTION (01-00-00)

1.2.7 Terminology

Warnings, cautions, and notes are used throughout this manual to emphasize important and critical instructions as follows:

WARNING

AN OPERATING PROCEDURE, PRACTICE, ETC., WHICH, IF NOT CORRECTLY FOLLOWED, COULD RESULT IN PERSONAL INJURY OR LOSS OF LIFE.

CAUTION

AN OPERATING PROCEDURE, PRACTICE, ETC., WHICH NOT STRICTLY OBSERVED, COULD RESULT IN DAMAGE TO, OR DESTRUCTION OF, EQUIPMENT.

NOTE

An operating procedure, condition, etc., which is essential to highlight.

1.2.8 Use of Procedural Words

The concept of procedural word usage and intended meaning which is used throughout this manual is as follows:

"Shall" is used only when application of a procedure is mandatory.
"Should" is used only when application of a procedure is recommended.
"May" and "need not" is used only when application of a procedure is optional.
"Will" is used only to indicate futurity, never to indicate a mandatory procedure.

1.2.9 Wear Limits

CAUTION

METRIC EQUIVALENTS TO U.S. STANDARD WEIGHTS AND MEASURES ARE PROVIDED THROUGHOUT THIS MANUAL. WHILE PERFORMING MEASUREMENTS TO DETERMINE THE SERVICEABILITY OF A COMPONENT OR TO ESTABLISH A SPECIFIED DIMENSION, ONLY THE U.S. STANDARD VALUES SHALL BE USED.

Throughout this manual, wear limits are provided to show the required fit between mating parts. It is not intended that all dimensions be checked as a prescribed maintenance procedure; however, parts that show evidence of wear or physical damage must be checked dimensionally.

• COPYRIGHT © 2023 BY EAGLE COPTERS MAINTENANCE LTD •
THIS DOCUMENT IS PRIVATE AND CONFIDENTIAL AND IS SUPPLIED ON THE EXPRESS CONDITION THAT IT IS NOT TO BE USED FOR ANY PURPOSE OR COPIED OR COMMUNICATED TO ANY OTHER PERSON WITHOUT WRITTEN PERMISSION FROM EAGLE COPTERS MAINTENANCE LTD.

CHAPTER 01 – INTRODUCTION (01-00-00)

Wear limits, fit, and tolerances are integrated into the inspection, repair, and assembly procedures. Unless otherwise specified, dimensions shall carry the following tolerances on decimals.

DECIMAL	TOLERANCE
.XXX	+/- 0.010 inch
.XX	+/- 0.03 inch
.X	+/- 0.1 inch

1.2.10 Standard Practices

Standard maintenance practices and procedures not specifically described within this manual are contained in BHT-ALL-SPM.

1.2.11 Replacement Parts and Assemblies

Replacement parts and assemblies required for proper maintenance are listed in a companion illustrated Parts Catalog and/or in IIN-D212-725. This catalog provides complete nomenclatures, part numbers, and ordering information.

1.2.12 Description of Helicopter

Dart Aerospace Ltd and Eagle Copters have developed Canadian STC SH07-28/SR02831NY to convert the twin engine Bell 212 to a single engine aircraft powered by the Honeywell T5317A/B/BCV engine. The purpose of this conversion is to reduce the empty weight and maintenance/operating costs of the Bell 212 aircraft.

The conversion process involves the following significant operations:

1.2.12.1 Remove two PT6 engines, 212 droop compensation system, 212 engine mounts, 212 combining gearbox, and 212 main rotor driveshaft.

1.2.12.2 Modify the existing 212 transmission by installing 205A1/B input quill, which utilizes the same clutch and pinion gear as 212 input quill.

1.2.12.3 Install Honeywell T5317A/B/BCV engine, 205A1/B droop compensation system, 205A1/B engine mounts and 205A1/B Kaflex main rotor driveshaft.

1.2.12.4 Remove wiring related to the second engine (#2 starter generator wiring, #2 start system, #2 engine indicating system etc.) and modify the overhead circuit breaker panel accordingly.

1.2.12.5 Remove the 212 firewalls and cowlings and install the 205 firewalls and cowlings.

1.2.12.6 Remove the 212 centre engine deck, L/H and R/H decks and replace with 205 centre engine deck, L/H and R/H decks allowing for the installation of the single T5317A/B/BCV engine and allowing for single engine control (throttle, droop compensation, fire extinguishing system, external oil filter and drain line fittings etc)

• COPYRIGHT © 2023 BY EAGLE COPTERS MAINTENANCE LTD •
THIS DOCUMENT IS PRIVATE AND CONFIDENTIAL AND IS SUPPLIED ON THE EXPRESS CONDITION THAT IT IS NOT TO BE USED FOR ANY PURPOSE OR COPIED OR COMMUNICATED TO ANY OTHER PERSON WITHOUT WRITTEN PERMISSION FROM EAGLE COPTERS MAINTENANCE LTD.

CHAPTER 01 – INTRODUCTION (01-00-00)

1.2.12.7 Remove 212 engine/transmission oil coolers and install the 205 style engine/transmission oil coolers and supporting structure

1.2.12.8 Modify/replace transmission pylon area panels from 212 style to 205 style walls and panels including L/H and R/H aft walls allowing for installation of oil tank and external fuel filter.

1.2.12.9 Remove 212 style instrument panel and replace with a custom made panel designed for single engine indication same as that of the 205.

1.2.12.10 Remove #2 engine throttle control from the airframe and the pilot and co-pilot collective sticks and disable the #2 throttle grip on the pilot and copilot collective sticks.

1.2.12.11 Adapt the fuel system from twin engine supply to single engine fuel supply.

1.2.12.12 The following systems/parts will NOT be effected by this conversion:

- Rotor Systems
- Landing Gear
- Tailboom (except for installation of the 212 strake kit per SH01-28/SR00798SE)
- Majority of the airframe
- Hydraulic System
- Cyclic Control
- Tail Rotor Control

The “Eagle Single” helicopter (Figure 1-1) consists of two major assemblies: The forward fuselage and tailboom. The forward fuselage is semi-monocoque and reinforced shell construction with transverse bulkheads and metal and fiberglass covering. Two longitudinal main beams provide the primary structural support.

A hinged door on either side of the forward area permits direct access to crew area and a large sliding door permits access to the cargo/passenger area. Additionally, a hinged cargo door is located immediately ahead of the sliding door. This door increases the width of access to the cargo/passenger area. Seating is provided for the pilot and forward passenger/copilot in the crew area (cockpit) and up to 9 passengers in the cargo/passenger (cabin) area.

The engine deck, located above and aft of the passenger/cargo area, is designed to accommodate the engine, firewalls, and air management system.

The tailboom is of semi-monocoque construction which provides support for a vertical fin, aerodynamically actuated elevator, tail rotor and tail rotor drive system, tail skid, and cargo compartment.

The powerplant is a Honeywell T5317A/B/BCV single gas turbine engine. The engine is a shaft turbine design with a two-stage, free-type power turbine and a two-stage gas producer turbine that drives a combination axial centrifugal compressor. Five major sections of the engine are air inlet, compressor, diffuser, combustor and exhaust. The maintenance and overhaul instructions for the basic engine are found in the applicable Honeywell publications.

• COPYRIGHT © 2023 BY EAGLE COPTERS MAINTENANCE LTD •
THIS DOCUMENT IS PRIVATE AND CONFIDENTIAL AND IS SUPPLIED ON THE EXPRESS CONDITION THAT IT IS NOT TO BE USED FOR ANY PURPOSE OR COPIED OR COMMUNICATED TO ANY OTHER PERSON WITHOUT WRITTEN PERMISSION FROM EAGLE COPTERS MAINTENANCE LTD.

CHAPTER 01 – INTRODUCTION (01-00-00)

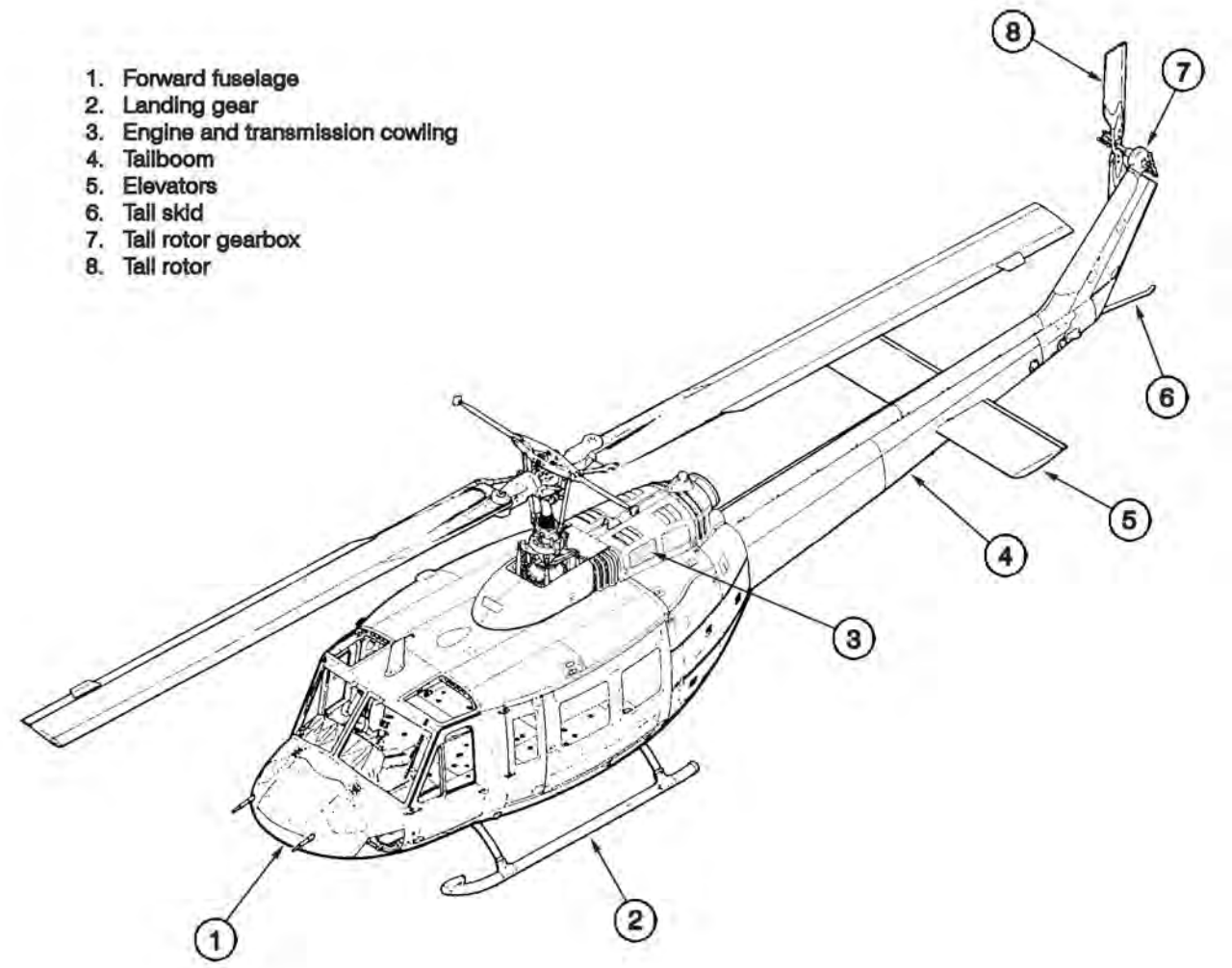

Figure 1-1. Eagle Single Helicopter (typical)

• COPYRIGHT © 2023 BY EAGLE COPTERS MAINTENANCE LTD •
THIS DOCUMENT IS PRIVATE AND CONFIDENTIAL AND IS SUPPLIED ON THE EXPRESS CONDITION THAT IT IS NOT TO BE USED FOR ANY PURPOSE OR COPIED OR COMMUNICATED TO ANY OTHER PERSON WITHOUT WRITTEN PERMISSION FROM EAGLE COPTERS MAINTENANCE LTD.

CHAPTER 01 – INTRODUCTION (01-00-00)

1.3 Customer Feedback

Return via email to customersupport@eaglecopters.com

Manual Title: _____

Date of latest Revision: _____

Section; Chapter; Paragraph Affected: _____

Your feedback: _____

_____

_____

_____

_____

Now Reads: _____

_____

_____

_____

_____

Should Read: _____

_____

_____

_____

_____

Your Name: _____

Address: _____

_____

Position: _____ Company: _____

Phone: _____ Fax: _____

Email: _____

• COPYRIGHT © 2023 BY EAGLE COPTERS MAINTENANCE LTD •
THIS DOCUMENT IS PRIVATE AND CONFIDENTIAL AND IS SUPPLIED ON THE EXPRESS CONDITION THAT IT IS NOT TO BE USED FOR ANY PURPOSE OR COPIED OR COMMUNICATED TO ANY OTHER PERSON WITHOUT WRITTEN PERMISSION FROM EAGLE COPTERS MAINTENANCE LTD.

CHAPTER 04
AIRWORTHINESS LIMITATIONS
(04-00-00)

• COPYRIGHT © 2007 BY DART AEROSPACE LTD. •
THIS DOCUMENT IS PRIVATE AND CONFIDENTIAL AND IS SUPPLIED ON THE EXPRESS CONDITION THAT IT IS NOT TO BE USED FOR ANY PURPOSE OR COPIED OR COMMUNICATED TO ANY OTHER PERSON WITHOUT WRITTEN PERMISSION FROM DART AEROSPACE LTD.

CHAPTER 04 – AIRWORTHINESS LIMITATIONS (04-00-00)

4.1 AIRWORTHINESS LIMITATIONS SCHEDULE

4.1.1 The airworthiness limitations in Chapter 04 of BHT-212-MM apply except as noted in 4.1.2 and 4.1.3 below.

4.1.2 Refer to the following Honeywell T5313B/T5317 Service Bulletins for airworthiness limitations associated with the T5317A or T5317B engine.

T5313B/17-0001	Time Between Overhaul/Time Between Inspection
T5313B/17-0020	Life Limits

4.1.3 The Main Input Driveshaft p/n 204-040-433-101 has been adopted from the Bell 205A1 in accordance with Technical Bulletin 205-82-45 and therefore retains the following airworthiness limitation per TB 205-82-45.

Component	Part Number	Airworthiness Life
POWER TRAIN DRIVE SYSTEM COMPONENTS		
Main Input Driveshaft	204-040-433-101	5000 Hours

The Airworthiness Limitations section is approved by the Minister and specifies maintenance required by any applicable airworthiness or operating rule unless an alternative program has been approved by the Minister.

FOR: F.J.B. Wright
Regional Manager, Aircraft Certification
Prairie Northern Region

AIRMAC

JUN 01 2007

• COPYRIGHT © 2007 BY DART AEROSPACE LTD. •
THIS DOCUMENT IS PRIVATE AND CONFIDENTIAL AND IS SUPPLIED ON THE EXPRESS CONDITION THAT IT IS NOT TO BE USED FOR ANY PURPOSE OR COPIED OR COMMUNICATED TO ANY OTHER PERSON WITHOUT WRITTEN PERMISSION FROM DART AEROSPACE LTD.

CHAPTER 05 – INSPECTION AND COMPONENT OVERHAUL SCHEDULE (05-00-00)

CHAPTER 05
INSPECTION AND COMPONENT OVERHAUL SCHEDULE (05-00-00)

• COPYRIGHT © 2023 BY EAGLE COPTERS MAINTENANCE LTD. •
THIS DOCUMENT IS PRIVATE AND CONFIDENTIAL AND IS SUPPLIED ON THE EXPRESS CONDITION THAT IT IS NOT TO BE USED FOR ANY PURPOSE OR COPIED OR COMMUNICATED TO ANY OTHER PERSON WITHOUT WRITTEN PERMISSION FROM EAGLE COPTERS MAINTENANCE LTD.

CHAPTER 05 – INSPECTION AND COMPONENT OVERHAUL SCHEDULE (05-00-00)

TABLE OF CONTENTS

Table of Contents 2
LIST OF FIGURES 2
LIST OF TABLES 2
5.1 General 3
5.2 Daily Inspection – Part A 4
5.3 100 Hour/12 Calendar Months – Part A 6
5.4 25 Hours/30 Days – Part B 9
5.5 300 Hours – Part B 12
5.6 600 Hours/12 Months – Part B 13
5.7 Each 500 Hours of Component Operation 15
5.8 600 Hours of Component Operation or Anytime Driveshaft is Removed 16
5.9 3100 Hours of Component Operation 17
5.10 After Hard Landing 20
5.11 After Blade Strike or Other Rotating System Torque Spike 22
5.12 After Overspeed 23
5.13 After Over-Torque 24
5.14 After Engine Compressor Stall or Surge 25
5.15 After Lightning Strikes 26
5.16 Component Overhaul Schedule 27

LIST OF FIGURES

Figure 5-1 D212-725-1-901 bellcrank control component damage and repair (25/100 hours) 20

LIST OF TABLES

Table 5-1 Component Overhaul Schedule 27

• COPYRIGHT © 2023 BY EAGLE COPTERS MAINTENANCE LTD. •
THIS DOCUMENT IS PRIVATE AND CONFIDENTIAL AND IS SUPPLIED ON THE EXPRESS CONDITION THAT IT IS NOT TO BE USED FOR ANY PURPOSE OR COPIED OR COMMUNICATED TO ANY OTHER PERSON WITHOUT WRITTEN PERMISSION FROM EAGLE COPTERS MAINTENANCE LTD.

CHAPTER 05 – INSPECTION AND COMPONENT OVERHAUL SCHEDULE (05-00-00)

5.1 GENERAL

The inspection schedules noted in Chapter 05 of the BHT-212-MM apply to this helicopter. In addition, the inspections listed in section 5.2 – 5.16 of this chapter supplement those of the helicopter manufacturer.

• COPYRIGHT © 2023 BY EAGLE COPTERS MAINTENANCE LTD. •
THIS DOCUMENT IS PRIVATE AND CONFIDENTIAL AND IS SUPPLIED ON THE EXPRESS CONDITION THAT IT IS NOT TO BE USED FOR ANY PURPOSE OR COPIED OR COMMUNICATED TO ANY OTHER PERSON WITHOUT WRITTEN PERMISSION FROM EAGLE COPTERS MAINTENANCE LTD.

CHAPTER 05 – INSPECTION AND COMPONENT OVERHAUL SCHEDULE (05-00-00)

5.2 DAILY INSPECTION – PART A

Data Reference	Inspection Task Description	Initial Mech	Initial Other
	NOTE *Refer to the Bell 212 Maintenance Manual for the Daily Inspection – Part A requirements. Those requirements must be supplemented to include the following items*		
	5.2.1 GENERAL		
	5.2.1.1 Refer to Honeywell Maintenance Manual T5313B and T5317 Series for engine inspection requirements.		
Technical Bulletin 205-82-45	5.2.2 ENGINE-TO-TRANSMISSION (MAIN) DRIVESHAFT		
	5.2.2.1 Check shaft for visual damage and security of installation.		
Chapter 63	5.2.3 TRANSMISSION AND ENGINE COOLING		
	5.2.3.1 Oil coolers for leaking, damage, and obstruction.		
	5.2.3.2 Oil cooler hoses and tubes for leaking, damage, chafing, and fraying.		
	5.2.3.3 Oil cooler blower for damage and obstruction.		
Chapter 71	5.2.4 POWER PLANT		
	5.2.4.1 Starter generator for security of mounting, burned or arced connections, and cooling air duct for obstructions, kinking, and security.		
	5.2.4.2 Engine mounts for security and tubes for scratches, dents, cracks, and worn bearings.		
	5.2.4.3 Cowlings for security. Loose or missing fasteners, cracks, and proper operation of cowl latches.		
	5.2.4.4 Electrical installation for worn or frayed cable bundles, loose or broken clamps or fasteners.		

• COPYRIGHT © 2023 BY EAGLE COPTERS MAINTENANCE LTD. •
THIS DOCUMENT IS PRIVATE AND CONFIDENTIAL AND IS SUPPLIED ON THE EXPRESS CONDITION THAT IT IS NOT TO BE USED FOR ANY PURPOSE OR COPIED OR COMMUNICATED TO ANY OTHER PERSON WITHOUT WRITTEN PERMISSION FROM EAGLE COPTERS MAINTENANCE LTD.

CHAPTER 05 – INSPECTION AND COMPONENT OVERHAUL SCHEDULE (05-00-00)

5.2 DAILY INSPECTION – PART A

Data Reference	Inspection Task Description	Initial Mech	Initial Other
	5.2.4.5 Oil and fuel hoses and tubes for chafing, leaking, and security.		
	5.2.5 ENGINE AIR MANAGEMENT SYSTEM		
	5.2.5.1 Tailpipe for condition, obstruction, and security.		
	5.2.5.2 Air induction cowl and plenum for condition, obstruction, and security.		
Chapter 79	5.2.6 ENGINE OIL SYSTEM		
	5.2.6.1 Oil cooler heat exchanger for damage and obstruction.		
	5.2.6.2 Oil filter impending bypass indicator button not extended.		
	5.2.6.3 Proper oil level.		
Chapter 26	5.2.7 ENGINE FIRE EXTINGUISHER		
	5.2.7 Check engine fire extinguisher bottle for presence of red thermal discharge indicator disc.		

• COPYRIGHT © 2023 BY EAGLE COPTERS MAINTENANCE LTD. •
THIS DOCUMENT IS PRIVATE AND CONFIDENTIAL AND IS SUPPLIED ON THE EXPRESS CONDITION THAT IT IS NOT TO BE USED FOR ANY PURPOSE OR COPIED OR COMMUNICATED TO ANY OTHER PERSON WITHOUT WRITTEN PERMISSION FROM EAGLE COPTERS MAINTENANCE LTD.

CHAPTER 05 – INSPECTION AND COMPONENT OVERHAUL SCHEDULE (05-00-00)

5.3 100 HOUR/12 CALENDAR MONTHS – PART A

Data Reference	Inspection Task Description	Initial Mech	Initial Other
	NOTE *Refer to the Bell 212 Maintenance Manual for the 100 Hour/12 Month Inspection – Part A requirements. Those requirements must be supplemented to include the following items*		
	5.3.1 GENERAL		
	5.3.1.1 Refer to Honeywell Maintenance Manual T5313B and T5317 Series for engine inspection requirements.		
Chapter 26	5.3.2 FIRE PROTECTION		
	5.3.2.1 Functionally check voltage of engine fire extinguishing circuit		
Manufacturer's Data	5.3.2.2 Replace engine fire extinguisher container firing cartridges in accordance with specified service life.		
Chapter 67	5.3.3 FLIGHT CONTROLS		
	5.3.3.1 Inspect D212-725-1-901 Bellcrank for damage per Figure 5-1.		
Chapter 71	5.3.4 POWER PLANT		
	5.3.4.1 Chip detector for debris.		
	5.3.4.2 Clean chip detector.		
	5.3.4.3 Test chip detector electrical circuit.		
Chapter 72-00-00 Engine Inspection, 1-C	**NOTE** *Refer to engine manufacturer's manual for engine Inspection (service) requirements.*		

• COPYRIGHT © 2023 BY EAGLE COPTERS MAINTENANCE LTD. •
THIS DOCUMENT IS PRIVATE AND CONFIDENTIAL AND IS SUPPLIED ON THE EXPRESS CONDITION THAT IT IS NOT TO BE USED FOR ANY PURPOSE OR COPIED OR COMMUNICATED TO ANY OTHER PERSON WITHOUT WRITTEN PERMISSION FROM EAGLE COPTERS MAINTENANCE LTD.

CHAPTER 05 – INSPECTION AND COMPONENT OVERHAUL SCHEDULE (05-00-00)

5.3 100 Hour/12 Calendar Months – Part A

Chapter 71	5.3.5 STARTER GENERATOR **Every 3rd 100 hour inspection or every 12 months** 5.3.5.1 Starter – generator cooling duct for obstruction, kinking, and security. 5.3.5.2 Check starter – generator for allowable brush wear. 5.3.6 ENGINE MOUNTS 5.3.6.1 Inspect engine mounts visually for cracks, damage, corrosion and security. Pay particular attention to security of turnbuckle jam nuts and to loose or missing locking wire. 5.3.6.2 Cracked sleeves, studs, bolts and bearings must be replaced immediately per Chapter 71. 5.3.6.3 Nicks, scratches, and corrosion damage up to 0.020” (0.50mm) deep is acceptable but must be polished out to a maximum depth of 0.020” (0.50mm) using scotchbrite. 5.3.6.4 Inspect the bearings and bolts for looseness. Loose bearings should be replaced per Chapter 71. If bolts are loose, holes should be checked for elongation. Maximum hole elongation is 0.025” (0.63mm). 5.3.6.5 Check turnbuckle nut torque. Proper range is 400-600 in-lbs (45.2-67.8 Nm). Ensure stud threads are visible through witness holes. 5.3.6.6 If lockwire is found broken, loose or missing or if turnbuckle jam nut torque is found to be loose, check engine alignment per the Chapter 71.		
TB-E212-725-2 TB-E212-725-3 TB-E212-725-4 TB-E212-725-5 TB-E212-725-9 TBN-212-001 TBN-212-002	5.3.7 TECHNICAL BULLETIN INSTALLATIONS **NOTE** *This section is only applicable to aircraft that have the optional TB’s installed.* 5.3.7.1 Inspect the installed equipment and surrounding structure for installation security and damage such as fastener deterioration, cracks, corrosion, paint exfoliation and other signs of structural deterioration.		

• COPYRIGHT © 2023 BY EAGLE COPTERS MAINTENANCE LTD. •
THIS DOCUMENT IS PRIVATE AND CONFIDENTIAL AND IS SUPPLIED ON THE EXPRESS CONDITION THAT IT IS NOT TO BE USED FOR ANY PURPOSE OR COPIED OR COMMUNICATED TO ANY OTHER PERSON WITHOUT WRITTEN PERMISSION FROM EAGLE COPTERS MAINTENANCE LTD.

CHAPTER 05 – INSPECTION AND COMPONENT OVERHAUL SCHEDULE (05-00-00)

5.3 100 Hour/12 Calendar Months – Part A

	5.3.7.2 Check the equipment and connectors for damage, correct installation, and corrosion. 5.3.7.3 Examine electrical wiring harness for condition and any evidence of fraying, chafing, overheating, or damage.		

• COPYRIGHT © 2023 BY EAGLE COPTERS MAINTENANCE LTD. •
THIS DOCUMENT IS PRIVATE AND CONFIDENTIAL AND IS SUPPLIED ON THE EXPRESS CONDITION THAT IT IS NOT TO BE USED FOR ANY PURPOSE OR COPIED OR COMMUNICATED TO ANY OTHER PERSON WITHOUT WRITTEN PERMISSION FROM EAGLE COPTERS MAINTENANCE LTD.

CHAPTER 05 – INSPECTION AND COMPONENT OVERHAUL SCHEDULE (05-00-00)

5.4 25 HOURS/30 DAYS – PART B

Data Reference	Inspection Task Description	Initial Mech	Initial Other
	NOTE *Refer to the Bell 212 Maintenance Manual for the 25 Hour/30 Day Inspection – Part B requirements. Those requirements must be supplemented to include the following items*		
	5.4.1 GENERAL		
	5.4.1.1 Refer to Honeywell Maintenance Manual T5313B and T5317 Series for engine inspection requirements.		
	5.4.2 FUSELAGE – CABIN SECTION		
	5.4.2.1 All caution and warning lights for proper operation by using master caution, fire test, and cargo compartment smoke detector, press to test functions.		
Chapter 52	5.4.3 FUSELAGE AFT OF CABIN LEFT AND RIGHT SIDE		
Chapter 63	5.4.3.1 Transmission cooling system:		
	5.4.3.2 Oil cooler for leakage, damage, and obstruction.		
	5.4.3.3 Oil cooler hoses and tubes for leakage, damage, chafing and fraying.		
	5.4.3.4 Oil cooler blower for damage, corrosion, and obstruction.		
Chapter 79	5.4.3.5 Engine oil system:		
	5.4.3.5.1 Oil cooler for leakage, corrosion, damage, and obstruction.		
	5.4.3.5.2 Oil cooler hoses and tubes for leakage, damage, chafing, and fraying.		
	5.4.3.5.4 Oil filter impending bypass indicator button not extended.		
	5.4.3.5.4 Proper oil level.		

• COPYRIGHT © 2023 BY EAGLE COPTERS MAINTENANCE LTD. •
THIS DOCUMENT IS PRIVATE AND CONFIDENTIAL AND IS SUPPLIED ON THE EXPRESS CONDITION THAT IT IS NOT TO BE USED FOR ANY PURPOSE OR COPIED OR COMMUNICATED TO ANY OTHER PERSON WITHOUT WRITTEN PERMISSION FROM EAGLE COPTERS MAINTENANCE LTD.

CHAPTER 05 – INSPECTION AND COMPONENT OVERHAUL SCHEDULE (05-00-00)

5.4 25 HOURS/30 DAYS – PART B

Data Reference	Inspection Task Description	Initial Mech	Initial Other
Chapter 26	5.4.3.6 Engine compartment fire extinguisher container for proper charge, condition, and mounting.		
Chapter 71	5.4.3.7 Power plant:		
	5.4.3.7.1 Tail pipe for damage and security.		
	5.4.3.7.2 Oil and fuel hoses and tubes for chafing, leaking, and security.		
	5.4.3.7.3 Electric wiring for fraying, chafing, and security.		
Chapter 71	5.4.3.8 Engine firewalls, air intake cowl, and plenum for cracks, distortion, missing rivets, broken spot welds, and deteriorating seals and gaskets.		
Chapter 71	5.4.3.9 Engine cowling for missing fasteners and cracks. Latches for proper operation.		
	5.4.4 <u>TAILBOOM</u>		
	5.4.4.1 Inspect D212-725-1-901 Bellcrank for damage per Figure 5-1.		
	5.4.5 <u>CABIN ROOF</u>		
Chapter 63	5.4.5.1 Engine-to-transmission (main) driveshaft:		
	5.4.5.2 Main driveshaft for corrosion, condition, and security.		
Chapter 71	5.3.6 <u>ENGINE MOUNTS</u>		
	Every 4th 25 hour inspection or every 12 months		
	5.3.6.1 Inspect engine mounts visually for cracks, damage, corrosion and security. Pay particular attention to security of turnbuckle jam nuts and to loose or missing locking wire.		
	5.3.6.2 Cracked sleeves, studs, bolts and bearings must be replaced immediately per Chapter 71.		

• COPYRIGHT © 2023 BY EAGLE COPTERS MAINTENANCE LTD. •
THIS DOCUMENT IS PRIVATE AND CONFIDENTIAL AND IS SUPPLIED ON THE EXPRESS CONDITION THAT IT IS NOT TO BE USED FOR ANY PURPOSE OR COPIED OR COMMUNICATED TO ANY OTHER PERSON WITHOUT WRITTEN PERMISSION FROM EAGLE COPTERS MAINTENANCE LTD.

CHAPTER 05 – INSPECTION AND COMPONENT OVERHAUL SCHEDULE (05-00-00)

5.4 25 HOURS/30 DAYS – PART B

Data Reference	Inspection Task Description	Initial Mech	Initial Other
	5.3.6.3 Nicks, scratches, and corrosion damage up to 0.020" (0.50mm) deep is acceptable but must be polished out to a maximum depth of 0.020" (0.50mm) using scotchbrite. 5.3.6.4 Inspect the bearings and bolts for looseness. Loose bearings should be replaced per Chapter 71. If bolts are loose, holes should be checked for elongation. Maximum hole elongation is 0.025" (0.63mm). 5.3.6.5 Check turnbuckle nut torque. Proper range is 400-600 in-lbs (45.2-67.8 Nm). Ensure stud threads are visible through witness holes. 5.3.6.6 If lockwire is found broken, loose or missing or if turnbuckle jam nut torque is found to be loose, check engine alignment per the Chapter 71.		

• COPYRIGHT © 2023 BY EAGLE COPTERS MAINTENANCE LTD. •
THIS DOCUMENT IS PRIVATE AND CONFIDENTIAL AND IS SUPPLIED ON THE EXPRESS CONDITION THAT IT IS NOT TO BE USED FOR ANY PURPOSE OR COPIED OR COMMUNICATED TO ANY OTHER PERSON WITHOUT WRITTEN PERMISSION FROM EAGLE COPTERS MAINTENANCE LTD.

CHAPTER 05 – INSPECTION AND COMPONENT OVERHAUL SCHEDULE (05-00-00)

5.5 300 HOURS – PART B

Data Reference	Inspection Task Description	Initial Mech	Initial Other
	NOTE *Refer to the Bell 212 Maintenance Manual for the 300 Hour Inspection – Part B requirements. Those requirements must be supplemented to include the following items*		
	5.5.1 GENERAL		
	5.5.1.1 Each listed inspection item or maintenance function is to be performed in accordance with this ICA.		
Chapter 71	5.5.2 POWER PLANT		
	5.5.2.1 Chip detector for debris.		
	5.5.2.2 Clean chip detector.		
	5.5.2.3 Test chip detector electrical circuit.		
Chapter 71	5.5.3 ENGINE ELECTRICAL CONNECTORS		
	5.5.3.1 Ignition leads for corrosion, chafing, and security.		
Chapter 71	5.5.4 STARTER-GENERATOR		
	5.5.4.1 Starter-generator brushed for allowable wear.		
	5.5.4.2 Starter-generator cooling duct for obstruction, kinking, and security.		

• COPYRIGHT © 2023 BY EAGLE COPTERS MAINTENANCE LTD. •
THIS DOCUMENT IS PRIVATE AND CONFIDENTIAL AND IS SUPPLIED ON THE EXPRESS CONDITION THAT IT IS NOT TO BE USED FOR ANY PURPOSE OR COPIED OR COMMUNICATED TO ANY OTHER PERSON WITHOUT WRITTEN PERMISSION FROM EAGLE COPTERS MAINTENANCE LTD.

CHAPTER 05 – INSPECTION AND COMPONENT OVERHAUL SCHEDULE (05-00-00)

5.6 600 HOURS/12 MONTHS – PART B

Data Reference	Inspection Task Description	Initial Mech	Initial Other
	NOTE *Refer to the Bell 212 Maintenance Manual for the 600 Hour/12 Month Inspection – Part B requirements. Those requirements must be supplemented to include the following items*		
	5.6.1 GENERAL		
	5.6.1.1 Each listed inspection item or maintenance function is to be performed in accordance with this ICA.		
	5.6.2 FUSELAGE		
Chapter 76	5.6.2.1 Engine: Accomplish a maximum power check per Section 76.3.3 of this ICA.		
Chapter 4, 26, 96	5.6.2.2 Fire extinguishing system:		
	5.6.2.2.1 Functionally check voltage of engine fire extinguishing circuit.		
	5.6.2.2.2 Hydrostatic test engine fire extinguisher container: Prior to refill after leakage or discharge and After five years of continuous service		
Manufacturer's Data	5.6.2.2.3 Replace engine fire extinguisher container firing cartridge in accordance with specified service life.		
TB-E212-725-2 TB-E212-725-3 TB-E212-725-4 TB-E212-725-5 TB-E212-725-9 TBN-212-001 TBN-212-002	5.6.3 TECHNICAL BULLETIN INSTALLATIONS **NOTE** *This section is only applicable to aircraft that have the optional TB's installed.*		
	5.6.3.1 Inspect the installed equipment and surrounding structure for installation security and damage such as fastener deterioration, cracks, corrosion, paint exfoliation and other signs of structural deterioration.		

• COPYRIGHT © 2023 BY EAGLE COPTERS MAINTENANCE LTD. •
THIS DOCUMENT IS PRIVATE AND CONFIDENTIAL AND IS SUPPLIED ON THE EXPRESS CONDITION THAT IT IS NOT TO BE USED FOR ANY PURPOSE OR COPIED OR COMMUNICATED TO ANY OTHER PERSON WITHOUT WRITTEN PERMISSION FROM EAGLE COPTERS MAINTENANCE LTD.

CHAPTER 05 – INSPECTION AND COMPONENT OVERHAUL SCHEDULE (05-00-00)

5.6 600 HOURS/12 MONTHS – PART B

Data Reference	Inspection Task Description	Initial Mech	Initial Other
	5.6.3.2 Check the equipment and connectors for damage, correct installation, and corrosion. 5.6.3.3 Examine electrical wiring harness for condition and any evidence of fraying, chafing, overheating, or damage.		

• COPYRIGHT © 2023 BY EAGLE COPTERS MAINTENANCE LTD. •
THIS DOCUMENT IS PRIVATE AND CONFIDENTIAL AND IS SUPPLIED ON THE EXPRESS CONDITION THAT IT IS NOT TO BE USED FOR ANY PURPOSE OR COPIED OR COMMUNICATED TO ANY OTHER PERSON WITHOUT WRITTEN PERMISSION FROM EAGLE COPTERS MAINTENANCE LTD.

CHAPTER 05 – INSPECTION AND COMPONENT OVERHAUL SCHEDULE (05-00-00)

5.7 EACH 500 HOURS OF COMPONENT OPERATION

Data Reference	Inspection Task Description	Initial Mech	Initial Other
	NOTE *Refer to the Bell 212 Maintenance Manual for the 500 Hours of Component Operation Inspection requirements. Those requirements must be supplemented to include the following items*		
Chapter 96	5.7.1 FIRE DETECTOR SYSTEM		
Chapter 26	5.7.1.1 Test fire detector system with Pyrotector 30-502 tester or equivalent.		

• COPYRIGHT © 2023 BY EAGLE COPTERS MAINTENANCE LTD. •
THIS DOCUMENT IS PRIVATE AND CONFIDENTIAL AND IS SUPPLIED ON THE EXPRESS CONDITION THAT IT IS NOT TO BE USED FOR ANY PURPOSE OR COPIED OR COMMUNICATED TO ANY OTHER PERSON WITHOUT WRITTEN PERMISSION FROM EAGLE COPTERS MAINTENANCE LTD.

CHAPTER 05 – INSPECTION AND COMPONENT OVERHAUL SCHEDULE (05-00-00)

5.8 600 HOURS OF COMPONENT OPERATION OR ANYTIME DRIVESHAFT IS REMOVED

Data Reference	Inspection Task Description	Initial Mech	Initial Other
Chapter 63 TB 205-82-45	**NOTE** *Refer to the Bell 212 Maintenance Manual for the 600 Hours of Component Operation Inspection requirements. Those requirements must be supplemented to include the following items* 5.8.1 MAIN DRIVESHAFT 204-040-433-101 5.8.1.1 Remove driveshaft and inspect internal fail-safe diameters for evidence of contact (Ref. Figure 63-3). If contact is noticed, driveshaft must be replaced. 5.8.1.2 Visually inspect driveshaft for obvious mechanical damage, flexplate looseness, corrosion, and/or fretting at flex plate bolted joints. (Refer to Figure 63-6, for damage limits). Repair per Chapter 63. 5.8.1.3 Reinstall driveshaft per Chapter 63.		

• COPYRIGHT © 2023 BY EAGLE COPTERS MAINTENANCE LTD. •
THIS DOCUMENT IS PRIVATE AND CONFIDENTIAL AND IS SUPPLIED ON THE EXPRESS CONDITION THAT IT IS NOT TO BE USED FOR ANY PURPOSE OR COPIED OR COMMUNICATED TO ANY OTHER PERSON WITHOUT WRITTEN PERMISSION FROM EAGLE COPTERS MAINTENANCE LTD.

5.9 3100 HOURS OF COMPONENT OPERATION

Data Reference	Inspection Task Description	Initial Mech	Initial Other
	NOTE *This inspection applies to 205-040-250-ALL clutches installed in 212-040-001-059/-137 and subsequent transmissions* 5.9.1 MAIN TRANSMISSION 212-040-001-059/-137 AND SUB 5.9.1.1 Disassemble transmission sufficiently to remove the main input driven gear quill 204-040-362 in accordance with BHT-212-CR&O Manual. 5.9.1.2 Remove gear support case and debris collector to gain access to spiral bevel retaining bolts. 5.9.1.2.1 Using torque wrench, check each of the 32 bevel gear retaining bolts 214-040-117-005 for minimum torque of 300 inch-pounds (34.125 Nm). **NOTE** *Torque check is accomplished with increasing torque, not break away or loosening torque.* 5.9.1.2.2 If torque value of any one retaining bolt is less than 300 inch-pounds (34.125Nm), remove bevel gear and inspect mating surface of gear 204-040-701-101 and shaft 204-040-324-005 for fretting damage. 5.9.1.2.3 The maximum acceptable depth of pitting is 0.0005 inch (0.0127 mm). Depth may be measured by using a dial indicator with a needle pointed probe. Pitting of measurable depth is acceptable only in the area on the gear or shaft surface outside the diameter of the bolt holes, and is not acceptable within 0.100 (2.54 mm) of the edge of a bolt hole. Damage in excess of these limits is cause for rejection of part. 5.9.1.3 Inspect upper flange surface and pilot diameter of the ring gear 205-040-231, and mating surfaces of top case 212-040-059 for fretting and wear. Check limits in BHT-212-CR&O Manual.		

• COPYRIGHT © 2023 BY EAGLE COPTERS MAINTENANCE LTD. •
THIS DOCUMENT IS PRIVATE AND CONFIDENTIAL AND IS SUPPLIED ON THE EXPRESS CONDITION THAT IT IS NOT TO BE USED FOR ANY PURPOSE OR COPIED OR COMMUNICATED TO ANY OTHER PERSON WITHOUT WRITTEN PERMISSION FROM EAGLE COPTERS MAINTENANCE LTD.

CHAPTER 05 – INSPECTION AND COMPONENT OVERHAUL SCHEDULE (05-00-00)

5.9 3100 HOURS OF COMPONENT OPERATION

Data Reference	Inspection Task Description	Initial Mech	Initial Other
	5.9.1.4 Inspect lower flange surface and pilot diameter of ring gear 205-040-231, and mating surfaces of bevel gear support case 204-040-386 for fretting and wear. Check limits in BHT-212-CR&O Manual. 5.9.1.5 Visually check the vibro-etched index mark on input pinion 204-040-700 and inner race of the 214-040-118 bearing set for alignment. Inspection may be accomplished with input quill installed by viewing pinion shaft and bearing inner race between pinion teeth and main case. **NOTE** *If index marks indicate rotational movement between the pinion and inner race of the bearing set, remove quill and bearing set and inspect pinion bearing journal for signs of fretting and bearing inner race spinning. Visually inspect oil holes in input quill sleeve to ensure that they are free of foreign material. Inspect detail parts to determine cause for bearing inner race rotation and replace parts as required.* 5.9.1.6 Disassemble input quill 205-040-263 sufficiently to remove the freewheeling clutch (BHT-212-CR&O Manual). 5.9.1.7 Inspect clutch 205-040-250 (FORMSPRAG) (BHT-212-CR&O Manual). 5.9.1.8 Inspect bevel gear 204-040-701 and main input pinion 204-040-700 for general condition and wear pattern. (Refer to BHT-212-CR&O Manual). 5.9.1.9 Inspect planetary ring gear, sun gears, and planetary pinions for general condition and wear patterns. Disassemble lower planetary assembly sufficiently to remove the lower planetary spider gear 204-040-785-003. Accomplish a magnetic particle inspection on the lower planetary spider gear in accordance with the BHT-ALL-SPM. Inspect all parts of upper and lower planetary visually for excessive wear and damage. Parts that show evidence of wear or physical damage must be checked dimensionally. (Refer to BHT-212-CR&O.)		

• COPYRIGHT © 2023 BY EAGLE COPTERS MAINTENANCE LTD. •
THIS DOCUMENT IS PRIVATE AND CONFIDENTIAL AND IS SUPPLIED ON THE EXPRESS CONDITION THAT IT IS NOT TO BE USED FOR ANY PURPOSE OR COPIED OR COMMUNICATED TO ANY OTHER PERSON WITHOUT WRITTEN PERMISSION FROM EAGLE COPTERS MAINTENANCE LTD.

CHAPTER 05 – INSPECTION AND COMPONENT OVERHAUL SCHEDULE (05-00-00)

5.9 3100 HOURS OF COMPONENT OPERATION

Data Reference	Inspection Task Description	Initial Mech	Initial Other
	5.9.1.10 Remove tail rotor drive quill 212-040-365-025 to gain access to accessory drive and sump gears. Visually inspect accessory case input quill gear 212-040-150-005 and tail rotor drive quill gear 212-040-151-009 for general condition and wear pattern. (Refer to BHT-212-CR&O Manual.) 5.9.1.11 Inspect inner and outer diameters of mast for corrosion and mechanical damage in accordance with BHT-212-CR&O Manual. 5.9.1.12 Assemble transmission. (Refer to BHT-212-CR&O Manual.)		

• COPYRIGHT © 2023 BY EAGLE COPTERS MAINTENANCE LTD. •
THIS DOCUMENT IS PRIVATE AND CONFIDENTIAL AND IS SUPPLIED ON THE EXPRESS CONDITION THAT IT IS NOT TO BE USED FOR ANY PURPOSE OR COPIED OR COMMUNICATED TO ANY OTHER PERSON WITHOUT WRITTEN PERMISSION FROM EAGLE COPTERS MAINTENANCE LTD.

CHAPTER 05 – INSPECTION AND COMPONENT OVERHAUL SCHEDULE (05-00-00)

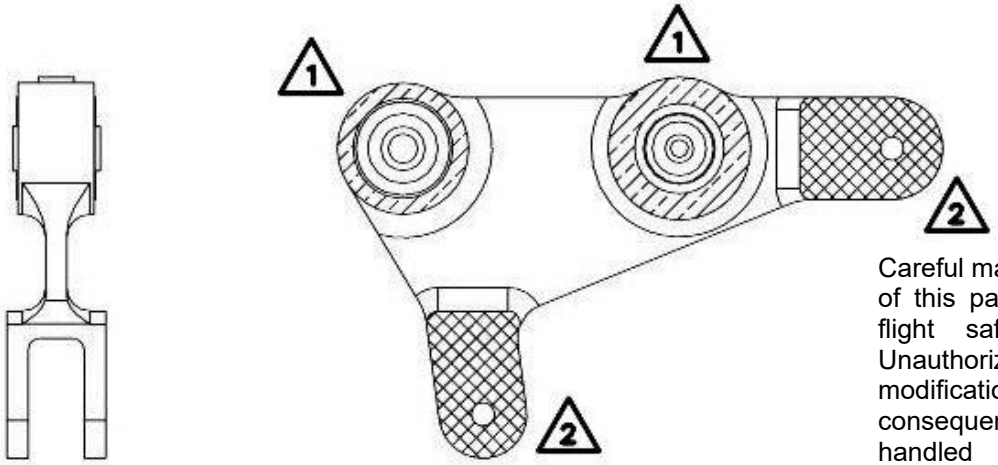

D212-725-1-901

CRITICAL PART

Careful maintenance and inspection of this part is critical to continued flight safety of the rotorcraft. Unauthorized repairs or modifications may have hazardous consequences. This part must be handled carefully and protected from damage and corrosion during maintenance, overhaul, storage and transportation. Contact Eagle Copters if unusual wear or deterioration is observed with this part.

TYPE OF DAMAGE	MAXIMUM DAMAGE AND REPAIR DEPTH		
		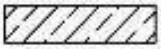	
MECHANICAL	0.010 IN. (0.254 mm) before and after repair	0.016 IN. (0.4064 mm) before and after repair	0.020 IN. (0.508 mm) before and after repair
CORROSION	0.005 IN. (0.127 mm) before and 0.010 IN. (0.254 mm) after repair	0.008 IN. (0.2032 mm) before and 0.016 IN. (0.4064 mm) after repair	0.010 IN. (0.254 mm) before and 0.020 IN. (0.508 mm) after repair
MAXIMUM AREA PER FULL DEPTH REPAIR	0.10 SQ. IN. (64.52 SQ. mm)	0.10 SQ. IN. (64.52 SQ. mm)	0.25 SQ. IN. (161.3 SQ. mm)
NUMBER OF REPAIR AREAS	One per lug	One per area	Not critical
EDGE CHAMFER	0.015 IN. (0.381 mm) by 45º	0.025 IN. (0.635 mm) by 45º	0.060 IN. (1.524 mm) by 45º

1 Bore damage not to exceed 0.001 inch (0.0254 mm) for one-fourth circumference. Limit one repair per bore.

2 Bolt bore damage not to exceed 0.002 inch (0.0508 mm) for one-fourth circumference. Limit one repair per bore.

Figure 5-1 D212-725-1-901 bellcrank control component damage and repair (25/100 hours)

5.10 AFTER HARD LANDING

• COPYRIGHT © 2023 BY EAGLE COPTERS MAINTENANCE LTD. •
THIS DOCUMENT IS PRIVATE AND CONFIDENTIAL AND IS SUPPLIED ON THE EXPRESS CONDITION THAT IT IS NOT TO BE USED FOR ANY PURPOSE OR COPIED OR COMMUNICATED TO ANY OTHER PERSON WITHOUT WRITTEN PERMISSION FROM EAGLE COPTERS MAINTENANCE LTD.

CHAPTER 05 – INSPECTION AND COMPONENT OVERHAUL SCHEDULE (05-00-00)

Data Reference	Inspection Task Description	Initial Mech	Initial Other
Honeywell Maintenance Manual T5313B and T5317 Series	**NOTE** *Refer to the Bell 212 Maintenance Manual for the After Hard Landing Inspection requirements. Those requirements must be supplemented to include the following items* <u>AFTER HARD LANDING</u> 5.10.1 Inspect power plant in accordance with Honeywell Maintenance Manual T5313B and T5317 Series. 5.10.2 If no significant damage has been found, no further inspection is necessary.		

• COPYRIGHT © 2023 BY EAGLE COPTERS MAINTENANCE LTD. •
THIS DOCUMENT IS PRIVATE AND CONFIDENTIAL AND IS SUPPLIED ON THE EXPRESS CONDITION THAT IT IS NOT TO BE USED FOR ANY PURPOSE OR COPIED OR COMMUNICATED TO ANY OTHER PERSON WITHOUT WRITTEN PERMISSION FROM EAGLE COPTERS MAINTENANCE LTD.

5.11 AFTER BLADE STRIKE OR OTHER ROTATING SYSTEM TORQUE SPIKE

Data Reference	Inspection Task Description	Initial Mech	Initial Other
	NOTE *Refer to the Bell 212 Maintenance Manual for the After Blade Strike or other rotating torque spike Inspection requirements. Those requirements must be supplemented to include the following items* <u>AFTER SUDDEN STOPPAGE – POWER ON OR OFF</u>		
BHT-205A1-CR&O TB 205-82-45	5.11.1 Remove and inspect main driveshaft visually. If evidence of yielding or deformation is noted, scrap driveshaft assembly and attaching bolts. If no visual evidence of damage is detected, perform an overhaul evaluation. Make an entry in component record to show reason for removal was sudden stoppage.		
Honeywell Maintenance Manual T5313B and T5317 Series	5.11.2 Inspect engine in accordance with Honeywell Maintenance Manual T5313B and T5317 Series.		

• COPYRIGHT © 2023 BY EAGLE COPTERS MAINTENANCE LTD. •
THIS DOCUMENT IS PRIVATE AND CONFIDENTIAL AND IS SUPPLIED ON THE EXPRESS CONDITION THAT IT IS NOT TO BE USED FOR ANY PURPOSE OR COPIED OR COMMUNICATED TO ANY OTHER PERSON WITHOUT WRITTEN PERMISSION FROM EAGLE COPTERS MAINTENANCE LTD.

CHAPTER 05 – INSPECTION AND COMPONENT OVERHAUL SCHEDULE (05-00-00)

5.12 AFTER OVERSPEED

Data Reference	Inspection Task Description	Initial Mech	Initial Other
	NOTE *Refer to the Bell 212 Maintenance Manual for the After Overspeed Inspection requirements. Those requirements must be supplemented to include the following items* AFTER OVERSPEED		
Honeywell Maintenance Manual T5313B and T5317 Series	5.12.1 Refer to Honeywell Maintenance Manual T5313B and T5317 Series for engine overspeed and inspection requirements.		

• COPYRIGHT © 2023 BY EAGLE COPTERS MAINTENANCE LTD. •
THIS DOCUMENT IS PRIVATE AND CONFIDENTIAL AND IS SUPPLIED ON THE EXPRESS CONDITION THAT IT IS NOT TO BE USED FOR ANY PURPOSE OR COPIED OR COMMUNICATED TO ANY OTHER PERSON WITHOUT WRITTEN PERMISSION FROM EAGLE COPTERS MAINTENANCE LTD.

CHAPTER 05 – INSPECTION AND COMPONENT OVERHAUL SCHEDULE (05-00-00)

5.13 AFTER OVER-TORQUE

		Mech	Other
Honeywell Maintenance Manual T5313B and T5317 Series	**NOTE** *Refer to the Bell 212 Maintenance Manual for the After Over-Torque Inspection requirements. Those requirements must be supplemented to include the following items* AFTER OVER-TORQUE 5.13.1 Refer to Honeywell Maintenance Manual T531 3B and T5317 Series for engine overtorque inspection requirements. 5.13.2 Overtorque inspections in the Bell 212 Maintenance Manual that are required when overtorque "does not exceed 104%" must be accomplished on the Eagle Single when overtorque has not exceeded 58 psi. 5.13.3 Overtorque inspections in the Bell 212 Maintenance Manual that are required when overtorque "exceeds 104% but does not exceed 112%" must be accomplished on the Eagle Single when overtorque exceeds 58 psi, but does not exceed 62.4 psi: 5.13.4 Overtorque inspections in the Bell 212 Maintenance Manual that are required when overtorque "exceeds 112%" must be accomplished on the Eagle Single when overtorque has exceeded 62.4 psi:		

When determining the required inspection criteria after an overtorque event use the following information:

100% = 55.7 psi
104% = 58 psi
112% = 62.4 psi

• COPYRIGHT © 2023 BY EAGLE COPTERS MAINTENANCE LTD. •
THIS DOCUMENT IS PRIVATE AND CONFIDENTIAL AND IS SUPPLIED ON THE EXPRESS CONDITION THAT IT IS NOT TO BE USED FOR ANY PURPOSE OR COPIED OR COMMUNICATED TO ANY OTHER PERSON WITHOUT WRITTEN PERMISSION FROM EAGLE COPTERS MAINTENANCE LTD.

5.14 AFTER ENGINE COMPRESSOR STALL OR SURGE

Data Reference	Inspection Task Description	Initial Mech	Initial Other
	NOTE *Refer to the Bell 212 Maintenance Manual for the After Engine Compressor Stall or Surge Inspection requirements. Those requirements must be supplemented to include the following items* <u>AFTER ENGINE COMPRESSOR STALL OR SURGE</u> **NOTE** *Discuss circumstances of reported compressor stall with pilot, if possible. Determine N1 (GAS PROD) speed at which reported stall occurred. Check helicopter and engine logs for any pertinent history.* Engine compressor stall or surge is characterized by a sharp rumble or a series of loud sharp reports, severe engine vibration and a rapid rise in exhaust gas temperature (EGT), or measured gas temperature (MGT), depending on severity of surge. When a surge has been reported perform steps 5.14.1 through 5.14.3, as dictated by discrepant conditions. Components removed from a helicopter for evaluation following a compressor stall or surge shall be evaluated as an interrelated group. Removal records accompanying each component shall cross reference part and serial numbers of other drive system components removed for evaluation. 5.14.1 Examine inlet screen for blockage. 5.14.2 Inspect the engine in accordance with Honeywell Maintenance Manual T5313B and T5317 Series inspection requirements. 5.14.3 If compressor is dirty, wash per approved engine manufacturer's method.		
Honeywell Maintenance Manual T5313B and T5317 Series			

• COPYRIGHT © 2023 BY EAGLE COPTERS MAINTENANCE LTD. •
THIS DOCUMENT IS PRIVATE AND CONFIDENTIAL AND IS SUPPLIED ON THE EXPRESS CONDITION THAT IT IS NOT TO BE USED FOR ANY PURPOSE OR COPIED OR COMMUNICATED TO ANY OTHER PERSON WITHOUT WRITTEN PERMISSION FROM EAGLE COPTERS MAINTENANCE LTD.

CHAPTER 05 – INSPECTION AND COMPONENT OVERHAUL SCHEDULE (05-00-00)

5.15 AFTER LIGHTNING STRIKES

Data Reference	Inspection Task Description	Initial Mech	Initial Other
	NOTE *Refer to the Bell 212 Maintenance Manual for the After Lightning Strike Inspection requirements. Those requirements must be supplemented to include the following items* AFTER LIGHTNING STRIKES		
TB 205-82-45 BHT-205-CR&O	5.15.1 Remove main rotor driveshaft for inspection. 5.15.1.1 Inspect the driveshaft in accordance with the 600 Hour Special Inspection. 5.15.1.2 Visually inspect driveshaft for any evidence of arc burning or pitting. Any evidence of arc burning or pitting is cause for rejection.		

• COPYRIGHT © 2023 BY EAGLE COPTERS MAINTENANCE LTD. •
THIS DOCUMENT IS PRIVATE AND CONFIDENTIAL AND IS SUPPLIED ON THE EXPRESS CONDITION THAT IT IS NOT TO BE USED FOR ANY PURPOSE OR COPIED OR COMMUNICATED TO ANY OTHER PERSON WITHOUT WRITTEN PERMISSION FROM EAGLE COPTERS MAINTENANCE LTD.

CHAPTER 05 – INSPECTION AND COMPONENT OVERHAUL SCHEDULE (05-00-00)

5.16 COMPONENT OVERHAUL SCHEDULE

5.16.1 Refer to the following Honeywell Service Bulletins for limitations on the engine/engine components:

T5313B/17-0001 Time Between Overhaul/Time Between Inspection
T5313B/17-0020 Life Limits

5.16.2 The component overhaul schedule noted in Chapter 05 of the BHT-212-MM applies to this helicopter. In addition the component overhauls listed in Table 5-1 of this chapter supplement those of the helicopter manufacturer.

Table 5-1 Component Overhaul Schedule

NOMENCLATURE	PART NUMBER	OVERHAUL INTERVAL HOURS
Oil Cooler Fan	204-062-540-001	1000

• COPYRIGHT © 2023 BY EAGLE COPTERS MAINTENANCE LTD. •
THIS DOCUMENT IS PRIVATE AND CONFIDENTIAL AND IS SUPPLIED ON THE EXPRESS CONDITION THAT IT IS NOT TO BE USED FOR ANY PURPOSE OR COPIED OR COMMUNICATED TO ANY OTHER PERSON WITHOUT WRITTEN PERMISSION FROM EAGLE COPTERS MAINTENANCE LTD.

CHAPTER 06
DIMENSIONS AND AREAS
(06-00-00)

• COPYRIGHT © 2007 BY DART AEROSPACE LTD. •
THIS DOCUMENT IS PRIVATE AND CONFIDENTIAL AND IS SUPPLIED ON THE EXPRESS CONDITION THAT IT IS NOT TO BE USED FOR ANY PURPOSE OR COPIED OR COMMUNICATED TO ANY OTHER PERSON WITHOUT WRITTEN PERMISSION FROM DART AEROSPACE LTD.

TABLE OF CONTENTS

Table of Contents 2
6.1 Airframe Principal Dimensions 3
6.2 Stations, Waterlines, and Buttock Lines 3
6.2.1 General 3
6.2.2 Station Lines (F.S.) 3
6.2.3 Water Lines (W.L) 3
6.2.4 Buttock Lines (B.L.) 3
6.2.5 Tailboom And Baggage Compartment Station Lines 3
6.2.6 Elevator Station Lines 3
6.2.7 Vertical Fin Station Lines (V.F.S.) 3
6.2.8 Main And Tail Rotor Blade Station Lines 3

LIST OF FIGURES

Figure 6-1. Principal dimensions 4
Figure 6-2. Station diagram (sheet 1 of 2) 5
Figure 6-2. Station diagram (sheet 2 of 2) 6

• COPYRIGHT © 2007 BY DART AEROSPACE LTD. •
THIS DOCUMENT IS PRIVATE AND CONFIDENTIAL AND IS SUPPLIED ON THE EXPRESS CONDITION THAT IT IS NOT TO BE USED FOR ANY PURPOSE OR COPIED OR COMMUNICATED TO ANY OTHER PERSON WITHOUT WRITTEN PERMISSION FROM DART AEROSPACE LTD.

6.1 AIRFRAME PRINCIPAL DIMENSIONS

Figure 6-1 depicts the major dimensions of the modified helicopter. Due to variations in loading and landing gear deflection, all height dimensions are approximate. With ground handling wheels installed and fully extended, height will be increased by 5.0 in. (12.7 cm).

6.2 STATIONS, WATERLINES, AND BUTTOCK LINES

6.2.1 General

Station lines, including buttock lines, water lines, tailboom and baggage compartment lines, elevator stations, and main and tail rotor blade stations are used to determine locations on, and within, the helicopter. All such locators lines are measured (in inches) from known points. Therefore, these lines will not be expressed in metric equivalents within this manual.

6.2.2 Station Lines (F.S.)

Stations are vertical planes perpendicular to, and measured along, the longitudinal axis of the helicopter. Station (0) is a plane usually forward of the nose of the helicopter. Several stations are marked under the cargo door opening. Several station lines are shown on Figure 6-2 at recognizable locations on the airframe. Other station locations can be measured from these lines. Tailboom stations, stations within the baggage compartment, and stations along the vertical fin are illustrated in the same manner. These stations are perpendicular to the centerline on the tailboom and fin, as applicable, because these components are mounted at an angle to the horizontal plane of the fuselage.

6.2.3 Water Lines (W.L)

Water lines are horizontal planes perpendicular to, and measured along, the vertical axis of the helicopter Water line (0) is a plane below the lowest point on the fuselage. Water lines can be used to measure locations as described for station lines.

6.2.4 Buttock Lines (B.L.)

Buttock lines are vertical planes perpendicular to, and measured to, the left and right along the lateral axis of the helicopter. Buttock line (0) is the plane at the vertical centerline of the helicopter. Buttock lines can be used to measure locations as described for station lines.

6.2.5 Tailboom And Baggage Compartment Station Lines

Baggage compartment station lines are measured from the tailboom fuselage attach point to aft end of baggage compartment. Tailboom station lines are measured from aft end of baggage compartment to center of intermediate gearbox.

6.2.6 Elevator Station Lines

Elevator station lines (E.S.) are buttock lines extended through the elevator to elevator outboard tips. Fuselage station lines (F.S.) and tailboom stations (B.S.) also apply to the elevator.

6.2.7 Vertical Fin Station Lines (V.F.S.)

Vertical fin stations are parallel vertical lines perpendicular to the center line of the tail rotor shaft, below the leading edge of the vertical fin. Fuselage stations also apply to the vertical fin.

6.2.8 Main And Tail Rotor Blade Station Lines

Main and tail rotor blade station lines are measured from the center of hub to tip of blade.

• COPYRIGHT © 2007 BY DART AEROSPACE LTD. •
THIS DOCUMENT IS PRIVATE AND CONFIDENTIAL AND IS SUPPLIED ON THE EXPRESS CONDITION THAT IT IS NOT TO BE USED FOR ANY PURPOSE OR COPIED OR COMMUNICATED TO ANY OTHER PERSON WITHOUT WRITTEN PERMISSION FROM DART AEROSPACE LTD.

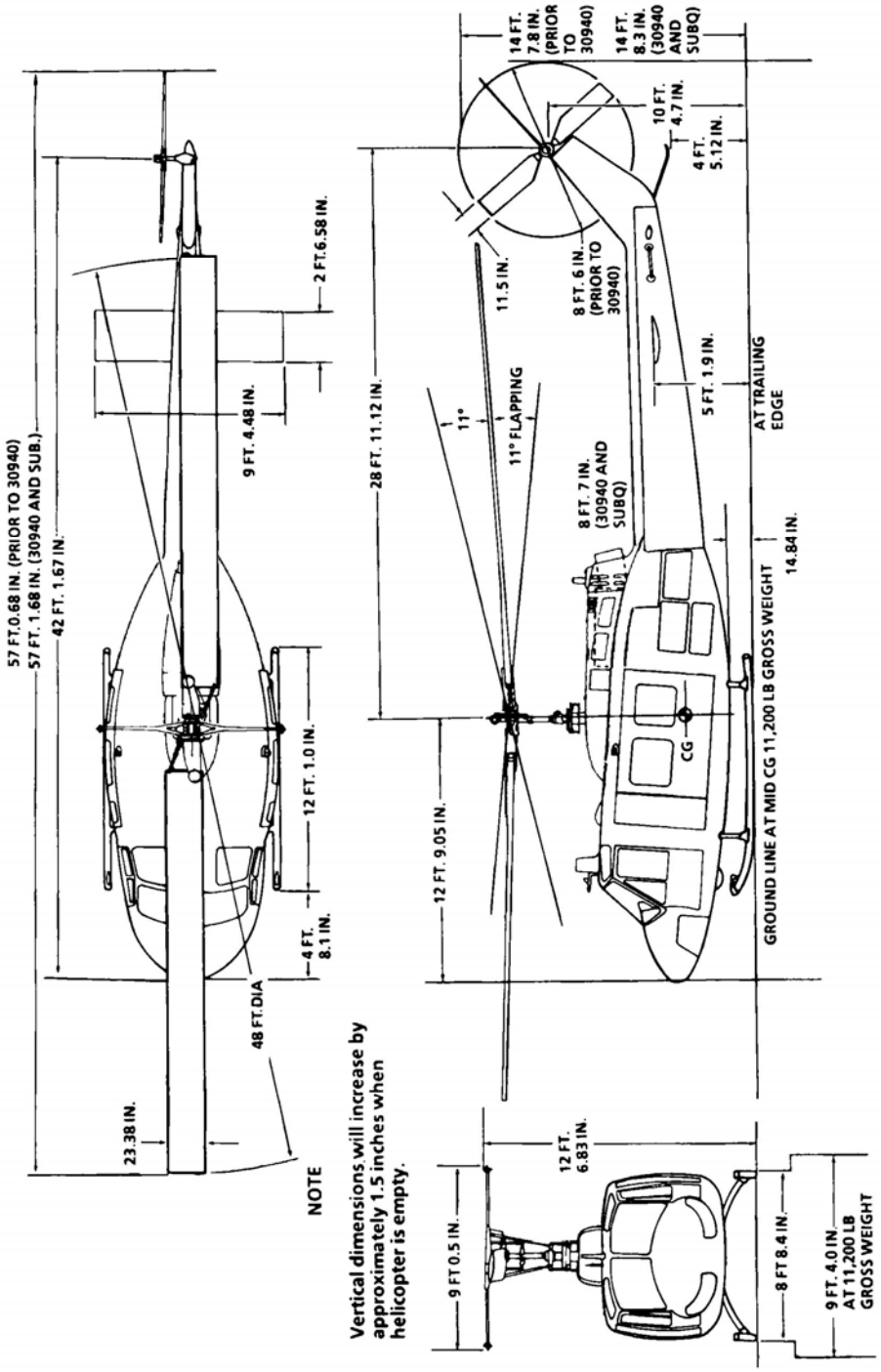

Figure 6-1. Principal dimensions

• COPYRIGHT © 2007 BY DART AEROSPACE LTD. •
THIS DOCUMENT IS PRIVATE AND CONFIDENTIAL AND IS SUPPLIED ON THE EXPRESS CONDITION THAT IT IS NOT TO BE USED FOR ANY PURPOSE OR COPIED OR COMMUNICATED TO ANY OTHER PERSON WITHOUT WRITTEN PERMISSION FROM DART AEROSPACE LTD.

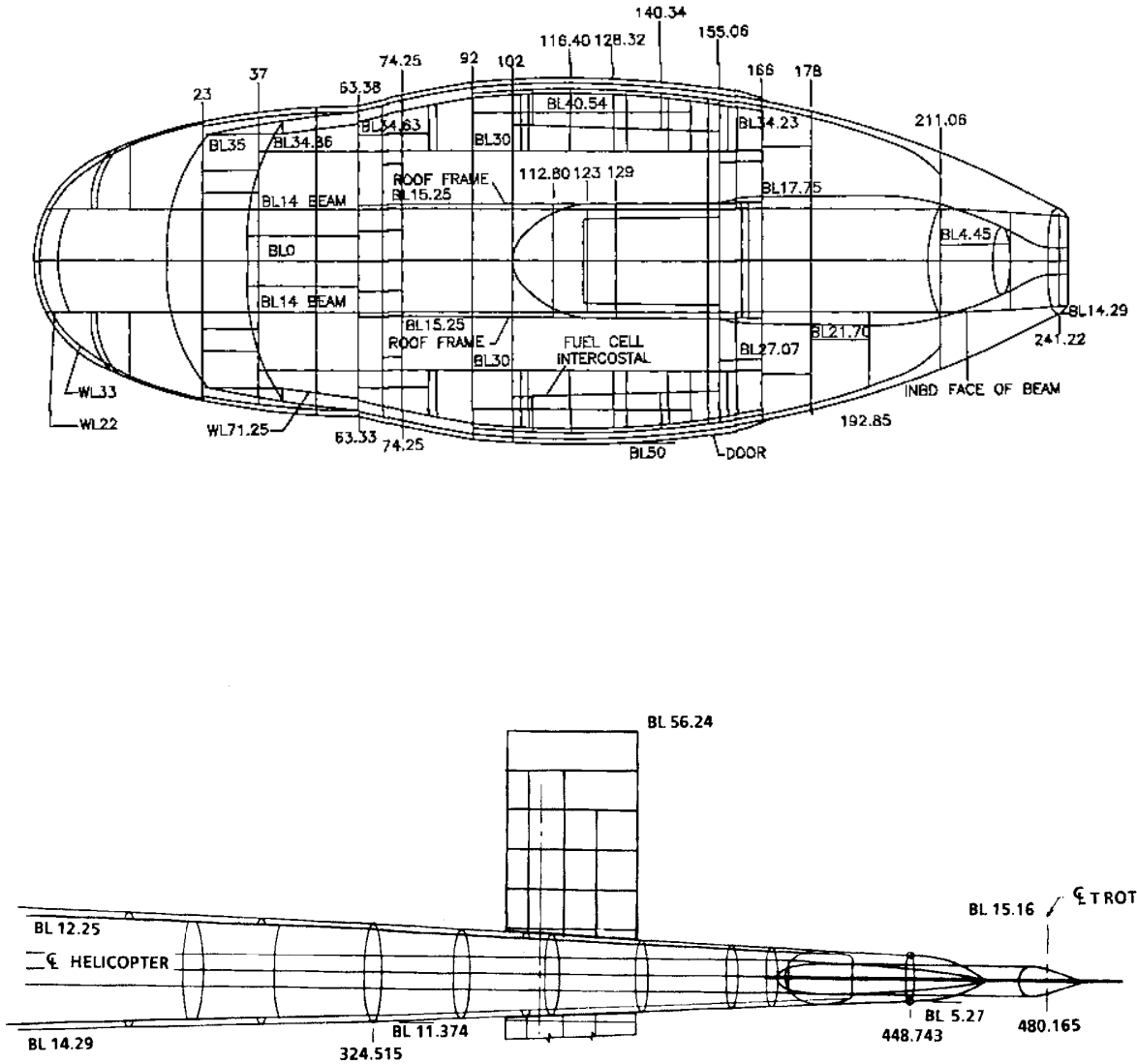

Figure 6-2. Station diagram (sheet 1 of 2)

• COPYRIGHT © 2007 BY DART AEROSPACE LTD. •
THIS DOCUMENT IS PRIVATE AND CONFIDENTIAL AND IS SUPPLIED ON THE EXPRESS CONDITION THAT IT IS NOT TO BE USED FOR ANY PURPOSE OR COPIED OR COMMUNICATED TO ANY OTHER PERSON WITHOUT WRITTEN PERMISSION FROM DART AEROSPACE LTD.

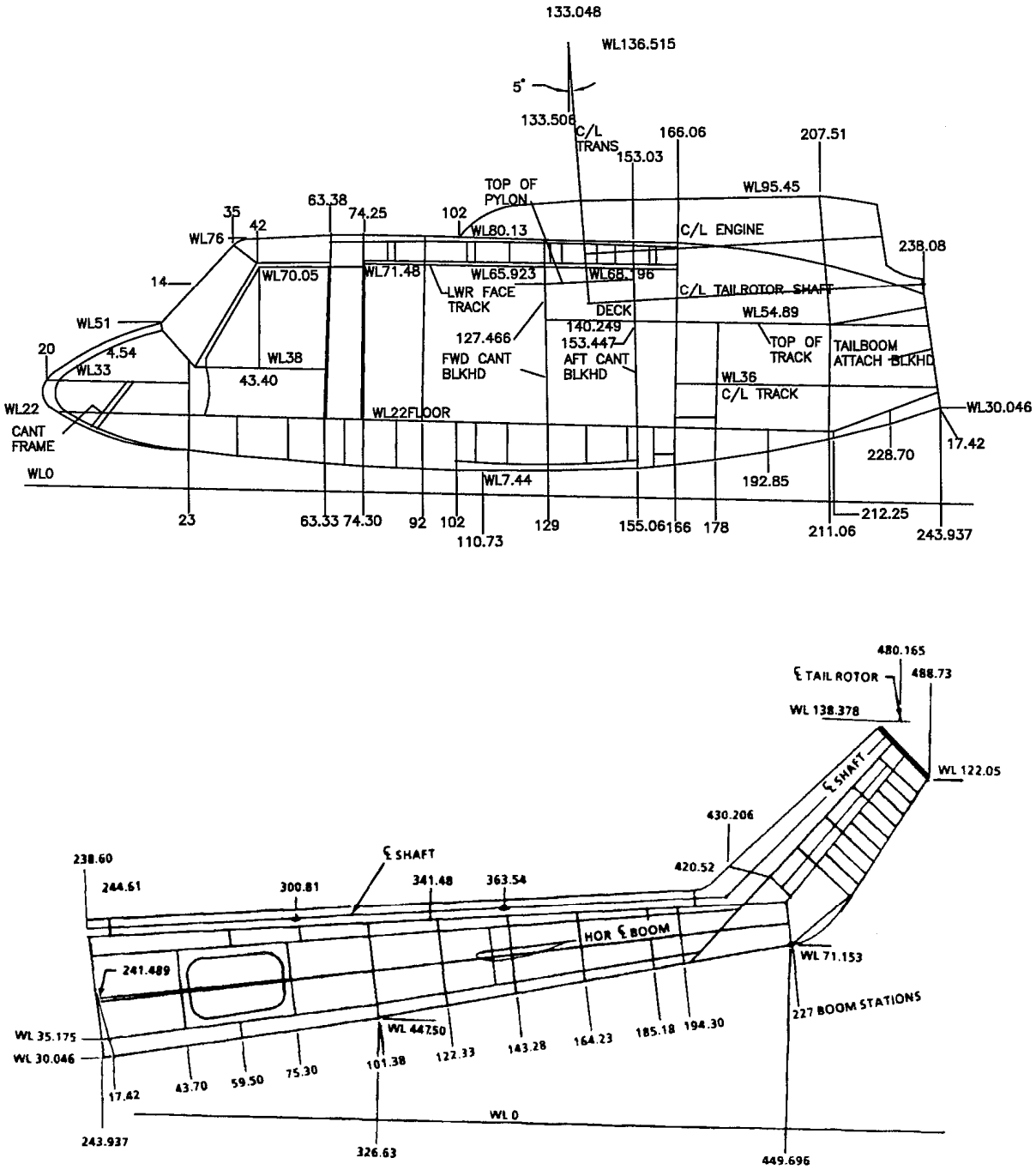

Figure 6-2. Station diagram (sheet 2 of 2)

• COPYRIGHT © 2007 BY DART AEROSPACE LTD. •
THIS DOCUMENT IS PRIVATE AND CONFIDENTIAL AND IS SUPPLIED ON THE EXPRESS CONDITION THAT IT IS NOT TO BE USED FOR ANY PURPOSE OR COPIED OR COMMUNICATED TO ANY OTHER PERSON WITHOUT WRITTEN PERMISSION FROM DART AEROSPACE LTD.

CHAPTER 07
LIFTING AND JACKING
(07-00-00)

REFER TO
BHT-212-MM

• COPYRIGHT © 2007 BY DART AEROSPACE LTD. •
THIS DOCUMENT IS PRIVATE AND CONFIDENTIAL AND IS SUPPLIED ON THE EXPRESS CONDITION THAT IT IS NOT TO BE USED FOR ANY PURPOSE OR COPIED OR COMMUNICATED TO ANY OTHER PERSON WITHOUT WRITTEN PERMISSION FROM DART AEROSPACE LTD.

CHAPTER 08
WEIGHT AND BALANCE
(08-00-00)

• COPYRIGHT © 2007 BY DART AEROSPACE LTD. •
THIS DOCUMENT IS PRIVATE AND CONFIDENTIAL AND IS SUPPLIED ON THE EXPRESS CONDITION THAT IT IS NOT TO BE USED FOR ANY PURPOSE OR COPIED OR COMMUNICATED TO ANY OTHER PERSON WITHOUT WRITTEN PERMISSION FROM DART AEROSPACE LTD.

CHAPTER 08 – WEIGHT AND BALANCE (08-00-00)

TABLE OF CONTENTS

Table of Contents 2
List of Figures 2
8.1 Weight and Balance 3
8.2 Leveling 3
8.3 Weighing 3
8.4 Determining Center of Gravity Location 4
8.5 Determining Amount of Ballast Required 6
8.6 Nose Ballast Installation and Removal 8
8.7 Tail Skid Ballast Installation and Removal 8
8.8 Weight and Balance Sample Problem 10

LIST OF FIGURES

Figure 8-1. Leveling 4
Figure 8-2. Weight and Balance 5
Figure 8-3. Nose Ballast 7
Figure 8-4. Tail Skid Ballast 9

• COPYRIGHT © 2007 BY DART AEROSPACE LTD. •
THIS DOCUMENT IS PRIVATE AND CONFIDENTIAL AND IS SUPPLIED ON THE EXPRESS CONDITION THAT IT IS NOT TO BE USED FOR ANY PURPOSE OR COPIED OR COMMUNICATED TO ANY OTHER PERSON WITHOUT WRITTEN PERMISSION FROM DART AEROSPACE LTD.

CHAPTER 08 – WEIGHT AND BALANCE (08-00-00)

8.1 WEIGHT AND BALANCE

The center of gravity (CG) is considered to be the balancing point of a body for weight and balance Purposes. The helicopter can be compared to a pendulum; the point of suspension being where the main rotor hub intersects the mast (the pendulum weight being the helicopter). If the pendulum weight is allowed to stop, it will come to rest directly below the suspension point. For example: If the CG of a helicopter is aft of the hub-mast intersection, the helicopter will be tail low in flight. The pilot can correct this condition by moving the cyclic control stick forward. If the required movement of the stick is great enough, the pilot will use all available control, thus limiting maneuverability and forward speed. Since such loss of maneuverability is unsafe, Care shall always be taken to keep the helicopter center of gravity within operational limits. Moving the CG is accomplished by adding or removing ballast.

NOTE

For additional weight and balance information, operators shall refer to information issued by the governing civil aviation authority.

8.2 LEVELING

NOTE

Leveling plate (2, Figure 8-1) is graduated in increments of 1/4°. The plate is located on cabin floor just inside left passenger cargo door. A slotted hole in upper door frame is provided for suspension of a plumb bob (1).

8.2.1 Support helicopter on jacks (Chapter 7).

8.2.2 Hang plumb bob (1) in slotted opening in door frame with point of plumb bob just above leveling plate (3) on cabin floor.

8.2.3 Adjust height of jacks to bring plumb bob (2) exactly over the point where two lines intersect at 0° on leveling plate. Helicopter is now leveled both longitudinally and laterally.

8.2.4 Remove plumb bob (2).

8.3 WEIGHING

The helicopter should be weighed in a Configuration as near Weight Empty as possible.

NOTE

Weight Empty condition is the basic helicopter together with seats, ballast, special equipment, transmission oil, hydraulic fluid, unusable fuel, and un-drainable oil.

8.3.1 All kits, transmission oil, and hydraulic fluid may remain aboard.

8.3.2 Ensure baggage compartment is empty.

8.3.3 Scale accuracy should be within plus or minus 1.0 lbs.

8.3.4 Position scales in an approximately level area, and check for proper adjustment to zero position.

CAUTION

WEIGHING SHOULD NOT BE ATTEMPTED IN AN OPEN AREA BECAUSE OF THE ADVERSE EFFECTS OF WIND.

8.3.5 Position a scale and jack assembly under each jack pad or under each forward jack pad and one aft jack pad. Raise helicopter clear of floor.

NOTE

For electronic scales, ensure load cells and adapters are fastened securely to jacks. Accomplish scale manufacturers recommended warm up time and zero each load cell.

8.3.6 Level helicopter (paragraph 8.2).

8.3.7 Balance each scale and record its reading.

• COPYRIGHT © 2007 BY DART AEROSPACE LTD. •
THIS DOCUMENT IS PRIVATE AND CONFIDENTIAL AND IS SUPPLIED ON THE EXPRESS CONDITION THAT IT IS NOT TO BE USED FOR ANY PURPOSE OR COPIED OR COMMUNICATED TO ANY OTHER PERSON WITHOUT WRITTEN PERMISSION FROM DART AEROSPACE LTD.

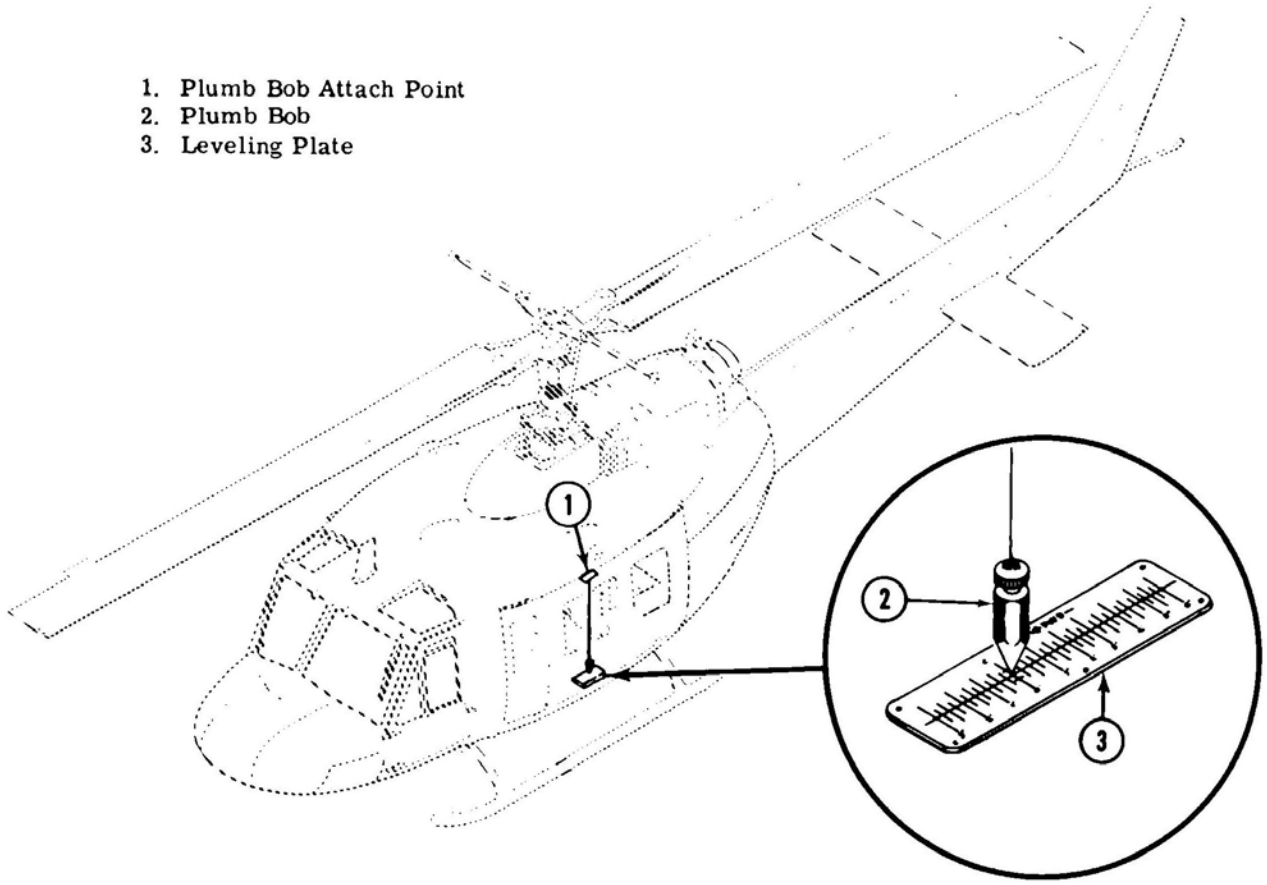

Figure 8-1. Leveling

8.3.8 Lower helicopter to surface. Weigh jacks, blocks, and any other equipment used between scales and helicopter. Deduct this weight (tare) from actual (first) scale readings to obtain net scale weights.

NOTE

For electronic scales, lower helicopter and verify each cell returns to zero setting. Variations from zero are considered tare and shall be added or subtracted from readings.

8.3.9 Total "As Weighed" weight is the sum of the individual net scale weights.

8.4 DETERMINING CENTER OF GRAVITY LOCATION

CAUTION

THE GROSS WEIGHT VERSUS CENTER OF GRAVITY LIMITS PRESENTED IN FMS-D212-725-1 SHALL NOT BE EXCEEDED.

• COPYRIGHT © 2007 BY DART AEROSPACE LTD. •
THIS DOCUMENT IS PRIVATE AND CONFIDENTIAL AND IS SUPPLIED ON THE EXPRESS CONDITION THAT IT IS NOT TO BE USED FOR ANY PURPOSE OR COPIED OR COMMUNICATED TO ANY OTHER PERSON WITHOUT WRITTEN PERMISSION FROM DART AEROSPACE LTD.

8.4.1 This distance from F.S. 0.0 to a line through centers of forward jack pads is called the forward arm. The distance from F.S. 0.0 to a line through the center of aft jack pads is called the aft arm. The forward arm is 61.69 in. (156.69 cm) and the aft arm is 211.58 in. (537.41 cm) (Figure 8-2).

8.4.2 Multiply total net weight of forward scales by forward arm. The product is called forward moment and is expressed in inch pounds (in-Lbs)

8.4.3 Multiply total net weight of aft scales by aft arm. This is the aft moment in in-Lbs

8.4.4 Add forward and aft moments and divide by total "As Weighed" weight. The quotient is helicopter "As Weighed" CG in inches aft of F.S. 0.0.

NOTE

The above procedure may be stated in equation form as follows:

$$\text{As Weighed CG} = \frac{(\text{Net Wt. Fwd Scales})(61.69) + (\text{Net Wt. Aft Scales})(211.58)}{\text{Total Net (As Weighed) Weight}}$$

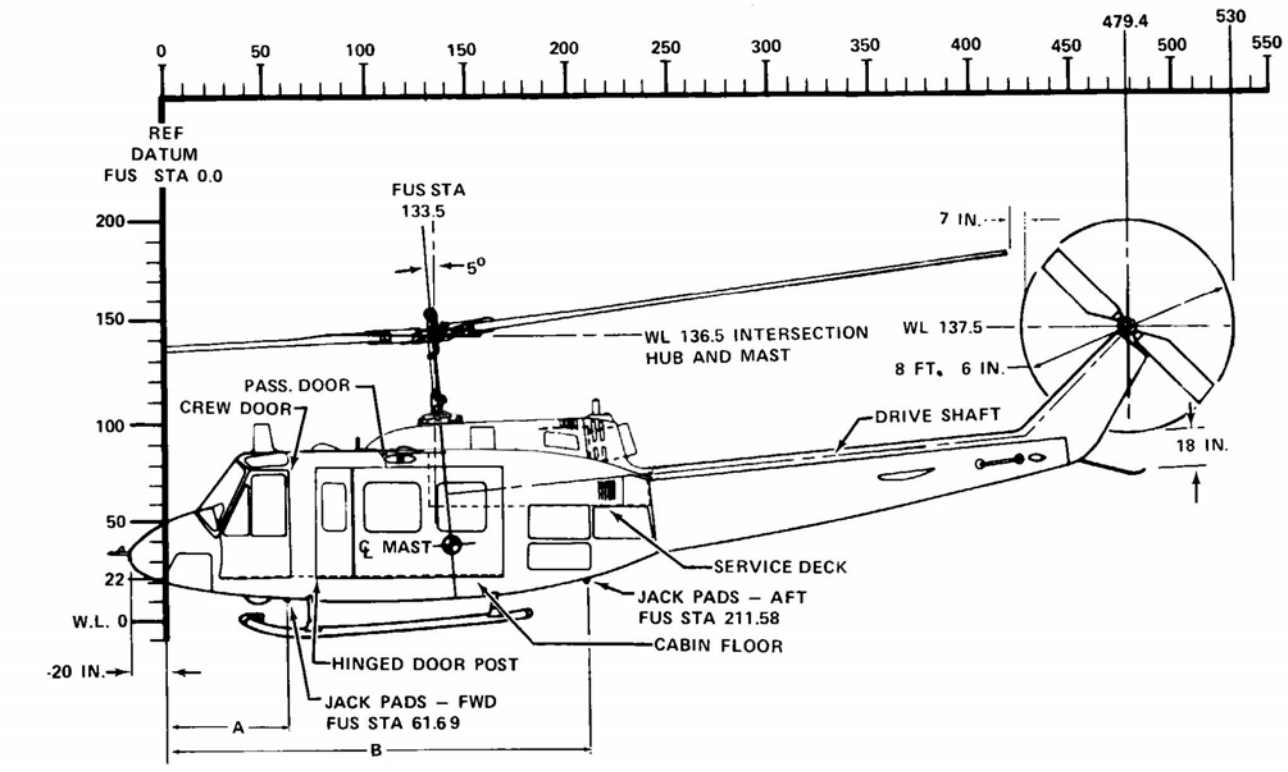

Figure 8-2. Weight and Balance

• COPYRIGHT © 2007 BY DART AEROSPACE LTD. •
THIS DOCUMENT IS PRIVATE AND CONFIDENTIAL AND IS SUPPLIED ON THE EXPRESS CONDITION THAT IT IS NOT TO BE USED FOR ANY PURPOSE OR COPIED OR COMMUNICATED TO ANY OTHER PERSON WITHOUT WRITTEN PERMISSION FROM DART AEROSPACE LTD.

8.5 DETERMINING AMOUNT OF BALLAST REQUIRED

8.5.1 Verify that the most forward and most aft weight and balance configurations of the helicopter are within Gross Weight vs Center of Gravity information provided in the FMS-D212-725-1. If ballast is required to maintain aircraft within the operational center of gravity add ballast as per section 8.6 and 8.7 as applicable.

NOTE

Be sure to include weight and balance information in calculations for installed kits (i.e. floatation kits, auxiliary fuel tanks etc.)

8.5.2 When Weight Empty CG is not within acceptable range determine the correct amount of ballast that needs to be added.

NOTE

Derived weight and CG are "as weighed" values plus those Weight Empty items which may have been omitted, and minus those items which are not part of Weight Empty.

8.5.3 Check derived weight plus ballast and resultant CG on the Gross Weight vs Center of Gravity Chart provided in the FMS-D212-725-1; add or remove ballast if necessary to arrive at desired CG.

NOTE

For weight and balance sample problem, refer to paragraph 8.8.

8.5.4 Whenever a helicopter has a unique situation such as: Nonstandard seating arrangement, nonstandard crew and/or passenger weights, baggage compartment being loaded, or weight empty exceeds chart, the forward and aft extremes for that configuration should be computed and checked against Gross Weight vs Center of Gravity chart to compute ballast requirements. The Gross Weight vs Center of Gravity chart is the final authority for determining ballast requirements. Refer to weight and balance chapter in supplied FMS-D212-725-1 for additional information.

• COPYRIGHT © 2007 BY DART AEROSPACE LTD. •
THIS DOCUMENT IS PRIVATE AND CONFIDENTIAL AND IS SUPPLIED ON THE EXPRESS CONDITION THAT IT IS NOT TO BE USED FOR ANY PURPOSE OR COPIED OR COMMUNICATED TO ANY OTHER PERSON WITHOUT WRITTEN PERMISSION FROM DART AEROSPACE LTD.

CHAPTER 08 – WEIGHT AND BALANCE (08-00-00)

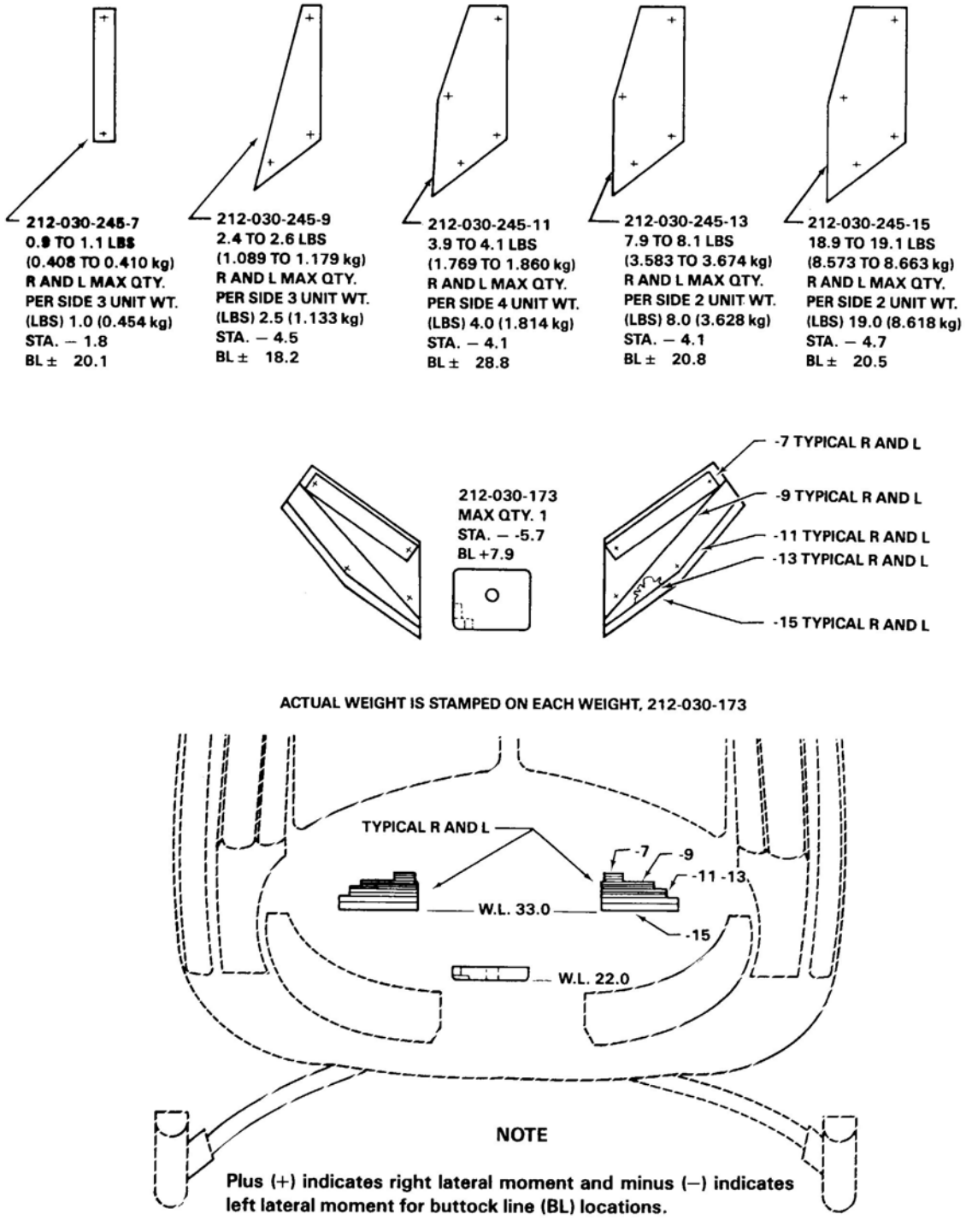

Figure 8-3. Nose Ballast

• COPYRIGHT © 2007 BY DART AEROSPACE LTD. •
THIS DOCUMENT IS PRIVATE AND CONFIDENTIAL AND IS SUPPLIED ON THE EXPRESS CONDITION THAT IT IS NOT TO BE USED FOR ANY PURPOSE OR COPIED OR COMMUNICATED TO ANY OTHER PERSON WITHOUT WRITTEN PERMISSION FROM DART AEROSPACE LTD.

8.6 NOSE BALLAST INSTALLATION AND REMOVAL

8.6.1 Determine amount of ballast to be added or removed and moment arm. Refer to Figure 8-3 for nose ballast station and butt line (B.L.) moment arms. Add or remove nose ballast weight as symmetrically as possible.

8.6.2 If ballast weight must be added, refer to Figure 8-3 to determine allowable number of ballast plates in each location. Inspect nose compartment to determine where additional ballast plates may be added.

8.6.3 If ballast weight must be removed, inspect nose compartment to determine locations where ballast weight plates may be removed.

8.7 TAIL SKID BALLAST INSTALLATION AND REMOVAL

8.7.1 Installation of equipment at forward stations and nose of helicopter may require addition of ballast (2 and 3, Figure 8-4) and/or inside tail skid (5) to aft section of tailboom (6).

8.7.2 After installation of equipment, a weight and balance check shall be accomplished. Ballast required to correctly locate center of gravity should be installed on or in tail skid (5).

8.7.3 Ballast may be added to a maximum of 50 lbs (22.68 kg) on and in tail skid. Ballast weights should be installed in a combination to provide amount required by weight and balance check.

NOTE

Ballast weights (2 and 3) shall be installed in combination with washers (1) and clamps (4) on tail skid (Figure 8-4).

8.7.4 Ballast, when required, should be installed on that portion of tail skid located inside tailboom (Figure 8-4) or inside tail skid.

NOTE

When ballast is installed inside tail skid, tail skid shall be filled completely full, approximately 15 lbs (6.8 kg).

8.7.5 Install ballast inside tail skid as follows:

8.7.5.1 Remove weight and record tail skid weight.

8.7.5.2 Remove phenolic plug from forward end of tail skid.

8.7.5.3 Completely fill tail skid with lead shot.

8.7.5.4 Install phenolic plug in forward end of tail skid and reweigh tail skid. Determine amount of ballast added (subtract tail skid empty weight from filled tail skid weight). Stencil forward end of tail skid, and inboard side of each tail skid access panel with actual weight of ballast added.

8.7.5.5 Install tail skid.

8.7.5.6 Add additional ballast, as required, not to exceed 50 pounds (22.68 kg) total ballast.

• COPYRIGHT © 2007 BY DART AEROSPACE LTD. •
THIS DOCUMENT IS PRIVATE AND CONFIDENTIAL AND IS SUPPLIED ON THE EXPRESS CONDITION THAT IT IS NOT TO BE USED FOR ANY PURPOSE OR COPIED OR COMMUNICATED TO ANY OTHER PERSON WITHOUT WRITTEN PERMISSION FROM DART AEROSPACE LTD.

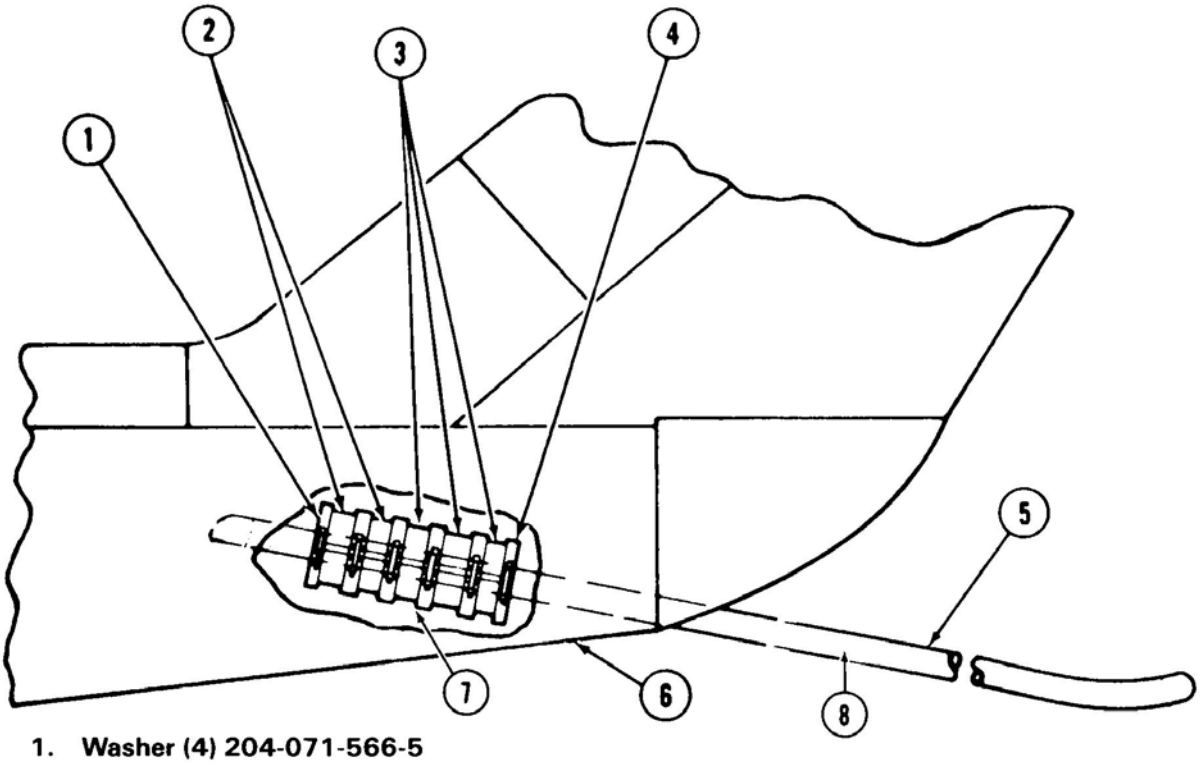

1. Washer (4) 204-071-566-5
2. Ballast (2) 204-071-566-3 } Nominal weight each 6.3 pounds (2.86 kg)
3. Ballast (3) 204-071-566-1
4. Clamp (6) 204-040-811-1
5. Tail skid
6. Tailboom
7. Center of ballast location, approximately F.S. 441.0
8. Center of gravity for lead shot, approximately F.S. 457.0

Figure 8-4. Tail Skid Ballast

• COPYRIGHT © 2007 BY DART AEROSPACE LTD. •
THIS DOCUMENT IS PRIVATE AND CONFIDENTIAL AND IS SUPPLIED ON THE EXPRESS CONDITION THAT IT IS NOT TO BE USED FOR ANY PURPOSE OR COPIED OR COMMUNICATED TO ANY OTHER PERSON WITHOUT WRITTEN PERMISSION FROM DART AEROSPACE LTD.

CHAPTER 08 – WEIGHT AND BALANCE (08-00-00)

8.8 WEIGHT AND BALANCE SAMPLE PROBLEM

8.8.1 The sample Actual Weight Record (see below) can be used as a guide to follow a helicopter from weighing to weight and balance check with intermediate steps to change adjust ballast.

Scale			Scale	Tare	Net
Left forward jackpoint	61.69	BL -30.0	***1185.0***	***0.0***	***1185.0***
Right forward jackpoint	61.69	BL +30.0	***1258.0***	***0.0***	***1258.0***
Aft jackpoint	211.58	BL ±14.53	***3260.0***	***30.0***	***3230.0***
		Total	***5703.0***	***30.0***	***5673.0***

The "As Weighed" condition is shown in the block at top of Actual Weight Record. "Net" weight is 'Scale' weight less tare.

8.8.2 Longitudinal CG as weighed

$$= \frac{\text{(Net weight fwd scales) (61.69) + (Net weight aft scale) (211.58)}}{\text{Total weight}}$$

$$= \frac{(1185.0 + 1258.0)\ (61.69) + (3230.0)\ (211.58)}{(5673.0)} = \frac{834112.07}{5673.0} = 147.03 \text{ inches aft of datum}$$

8.8.3 Lateral CG as weighed

$$= \frac{\text{(Net weight right scale) (30.0) + (Net weight left scale) (-30.0) + (Net weigh aft scale) (±14.53)}}{\text{Total weight}}$$

$$= \frac{(1258.0)\ (30.0) + (1185.0)\ (-30.0) + (3230.0)\ (0.0)}{5673.0} = \frac{2190.0}{5673.0} = 0.39 \text{ inches right of datum}$$

NOTE

Helicopter was weighed using aft jack point adapter that utilizes the center of the helicopter aft jack points.

• COPYRIGHT © 2007 BY DART AEROSPACE LTD. •
THIS DOCUMENT IS PRIVATE AND CONFIDENTIAL AND IS SUPPLIED ON THE EXPRESS CONDITION THAT IT IS NOT TO BE USED FOR ANY PURPOSE OR COPIED OR COMMUNICATED TO ANY OTHER PERSON WITHOUT WRITTEN PERMISSION FROM DART AEROSPACE LTD.

CHAPTER 08 – WEIGHT AND BALANCE (08-00-00)

		Longitudinal		Lateral	
	Weight	Arm	Moment	Arm	Moment
As weighed:	5673.0	147.03	834112.07	0.39	2190.0
Add:					
Unusable fuel	28.3	142.8	4041.2	0.0	0.0
Undrainable oil	7.1	230.7	1638.0	0.0	0.0
Engine Oil	24.5	169.1	4143.0	0.0	0.0
M/R G/B oil	27.3	172.9	4720.2	0.0	0.0
Hydraulic fluid	15.6	129.4	2018.6	-1.9	-30.0
Crew seats	73.6	54.0	3974.4	0.0	0.0
Passenger seats	121.4	104.3	12662.0	0.0	0.0
Derived Weight	5970.8	145.26	867309.46	0.36	2160.0

		Longitudinal		Lateral	
Most Forward	Weight	Arm	Moment	Arm	Moment
Weight Empty	5970.8	145.26	867309.46	0.36	2160.0
Add:					
Pilot and Copilot	340.0	47.0	15980.0	0.0	0.0
Passenger (4) Center seat	680.0	87.0	59160.0	0.0	0.0
Passenger (5) Aft seat	850.0	117.0	99450.0	0.0	0.0
Fuel most forward	472.0	127.6	60227.2	0.0	0.0
Weight Empty before ballast	8312.8	132.58	1102126.66	0.26	2160.0

		Longitudinal		Lateral	
Most Aft	Weight	Arm	Moment	Arm	Moment
Weight Empty	5970.8	145.26	867309.46	0.36	2160.0
Add:					
Pilot	170.0	47.0	7990.0	22.0	3740.0
Fuel (full)	1409.2	153.3	216045.7	0.0	0.0
Weight Empty before ballast	7550.0	144.55	1091329.82	0.78	5900.0

8.8.4 This helicopter is assumed to be dry so all Weight Empty fluids shall be added in determining Derived Weight. These fluids include hydraulic fluid, all transmission and gearbox oils, engine oil and with unusable fuel.

NOTE

Since it is impossible to operate helicopter without engine oil, it has been added to the derived weight of the aircraft.

• COPYRIGHT © 2007 BY DART AEROSPACE LTD. •
THIS DOCUMENT IS PRIVATE AND CONFIDENTIAL AND IS SUPPLIED ON THE EXPRESS CONDITION THAT IT IS NOT TO BE USED FOR ANY PURPOSE OR COPIED OR COMMUNICATED TO ANY OTHER PERSON WITHOUT WRITTEN PERMISSION FROM DART AEROSPACE LTD.

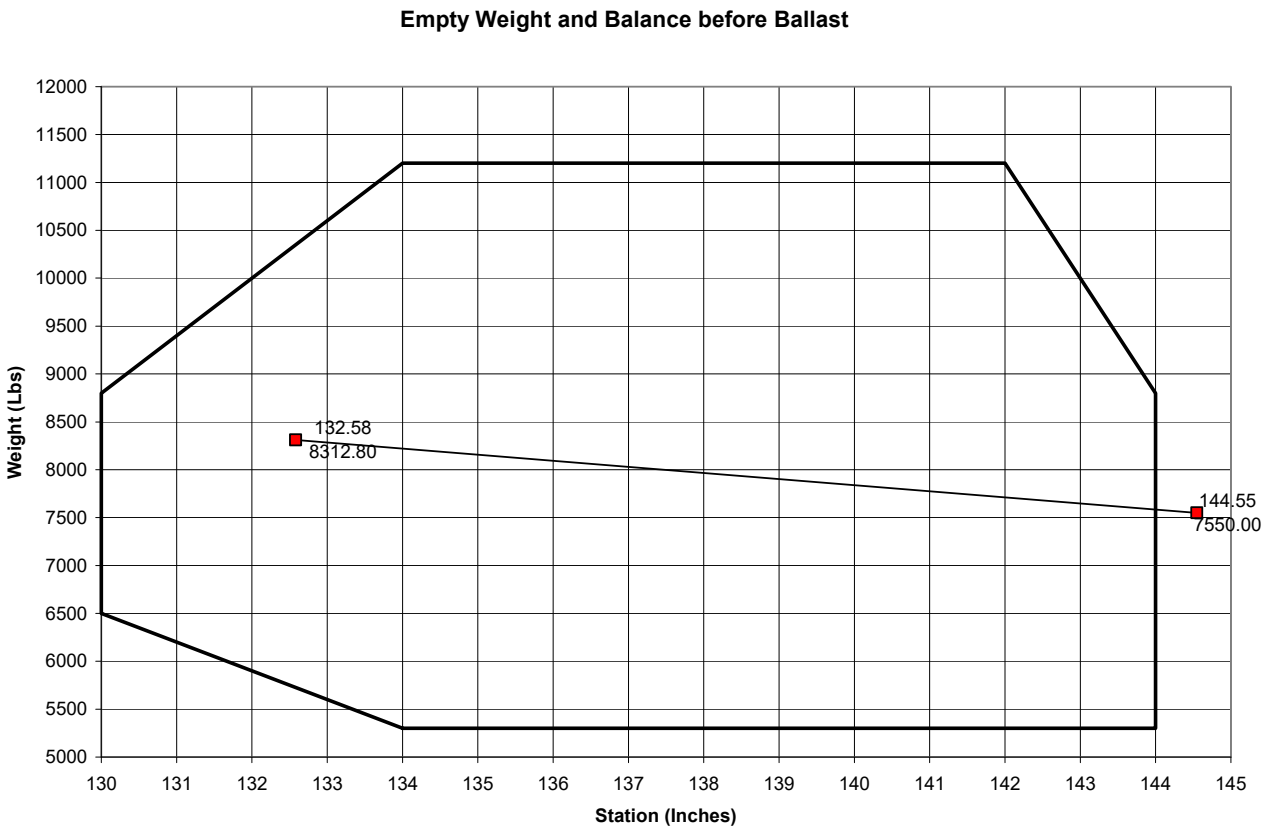

8.8.5 The helicopter operational weight and balance graph shows that in the most aft condition the aircraft would be operating outside the limits specified in the Gross Weight vs Center of Gravity chart from the FMS-D212-725-1.

Therefore nose ballast must be added.

The ballast computation uses trial and error method.

• COPYRIGHT © 2007 BY DART AEROSPACE LTD. •
THIS DOCUMENT IS PRIVATE AND CONFIDENTIAL AND IS SUPPLIED ON THE EXPRESS CONDITION THAT IT IS NOT TO BE USED FOR ANY PURPOSE OR COPIED OR COMMUNICATED TO ANY OTHER PERSON WITHOUT WRITTEN PERMISSION FROM DART AEROSPACE LTD.

CHAPTER 08 – WEIGHT AND BALANCE (08-00-00)

		Longitudinal		Lateral	
	Weight	Arm	Moment	Arm	Moment
Derived Weight:	5970.8	145.26	867309.46	0.36	2160.0
Add:					
Ballast	108.0	-4.5	-486.0	0.0	0.0
Weight Empty after ballast	6078.8	142.60	866823.46	0.36	2160.0

		Longitudinal		Lateral	
Most Forward	Weight	Arm	Moment	Arm	Moment
Weight Empty	6078.8	142.60	866823.46	0.36	2160.0
Add:					
Pilot and Copilot	340.0	47.0	15980.0	0.0	0.0
Passenger (4) Center seat	680.0	87.0	59160.0	0.0	0.0
Passenger (5) Aft seat	850.0	117.0	99450.0	0.0	0.0
Fuel most forward	472.0	127.6	60227.2	0.0	0.0
Weight Empty before ballast	8420.80	130.82	1101640.66	0.26	2160.0

		Longitudinal		Lateral	
Most Aft	Weight	Arm	Moment	Arm	Moment
Weight Empty	6078.8	142.60	866823.46	0.35	2160.0
Add:					
Pilot	170.0	47.0	7990.0	22.0	3740.0
Fuel (full)	1409.2	153.3	216045.7	0.0	0.0
Weight Empty before ballast	7658.0	142.45	1090843.82	0.77	5900.0

8.8.6 A recheck on verifies this CG at indicated weight to be acceptable (see figure below).

• COPYRIGHT © 2007 BY DART AEROSPACE LTD. •
THIS DOCUMENT IS PRIVATE AND CONFIDENTIAL AND IS SUPPLIED ON THE EXPRESS CONDITION THAT IT IS NOT TO BE USED FOR ANY PURPOSE OR COPIED OR COMMUNICATED TO ANY OTHER PERSON WITHOUT WRITTEN PERMISSION FROM DART AEROSPACE LTD.

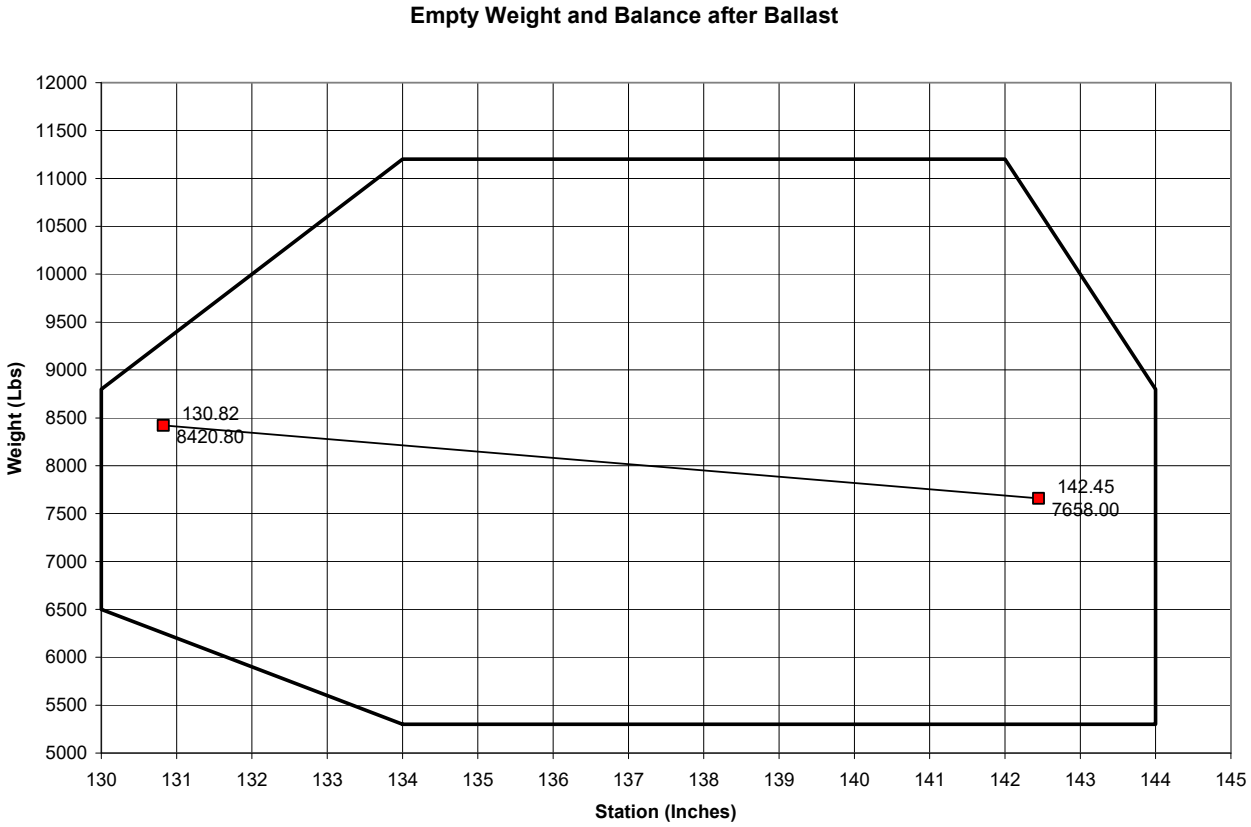

8.8.7 Maximum asymmetric limits are shown in FMS-D212-725-1 and will not be approached unless extreme lateral payload position is encountered. If it is necessary to load in this manner, a lateral check should be made.

• COPYRIGHT © 2007 BY DART AEROSPACE LTD. •
THIS DOCUMENT IS PRIVATE AND CONFIDENTIAL AND IS SUPPLIED ON THE EXPRESS CONDITION THAT IT IS NOT TO BE USED FOR ANY PURPOSE OR COPIED OR COMMUNICATED TO ANY OTHER PERSON WITHOUT WRITTEN PERMISSION FROM DART AEROSPACE LTD.

CHAPTER 09
TOWING
(09-00-00)

REFER TO
BHT-212-MM

• COPYRIGHT © 2007 BY DART AEROSPACE LTD. •
THIS DOCUMENT IS PRIVATE AND CONFIDENTIAL AND IS SUPPLIED ON THE EXPRESS CONDITION THAT IT IS NOT TO BE USED FOR ANY PURPOSE OR COPIED OR COMMUNICATED TO ANY OTHER PERSON WITHOUT WRITTEN PERMISSION FROM DART AEROSPACE LTD.

CHAPTER 10
PARKING AND MOORING
(10-00-00)

REFER TO
BHT-212-MM

• COPYRIGHT © 2007 BY DART AEROSPACE LTD. •
THIS DOCUMENT IS PRIVATE AND CONFIDENTIAL AND IS SUPPLIED ON THE EXPRESS CONDITION THAT IT IS NOT TO BE USED FOR ANY PURPOSE OR COPIED OR COMMUNICATED TO ANY OTHER PERSON WITHOUT WRITTEN PERMISSION FROM DART AEROSPACE LTD.

CHAPTER 11
PLACARDS AND MARKINGS
(11-00-00)

• COPYRIGHT © 2023 BY EAGLE COPTERS MAINTENANCE LTD. •
THIS DOCUMENT IS PRIVATE AND CONFIDENTIAL AND IS SUPPLIED ON THE EXPRESS CONDITION THAT IT IS NOT TO BE USED FOR ANY PURPOSE OR COPIED OR COMMUNICATED TO ANY OTHER PERSON WITHOUT WRITTEN PERMISSION FROM EAGLE COPTERS MAINTENANCE LTD.

CHAPTER 11 – PLACARDS AND MARKINGS (11-00-00)

TABLE OF CONTENTS

Consumable Material List....2
11.0 Placards and Markings....3
11.1 Placards....3
11.2 Decals – Application....3

LIST OF FIGURES

Figure 11-1. Placards and Markings 5

CONSUMABLE MATERIAL LIST

The following consumable materials are required to perform the maintenance procedures within this chapter.

ITEM No.	NOMENCLATURE	GAGE/FSCM/ SOURCE
C-305	Aliphatic Naphtha, TT-N-95, Type II	Commercial
C-306	Toluene, TT-T-548	Commercial

• COPYRIGHT © 2023 BY EAGLE COPTERS MAINTENANCE LTD. •
THIS DOCUMENT IS PRIVATE AND CONFIDENTIAL AND IS SUPPLIED ON THE EXPRESS CONDITION THAT IT IS NOT TO BE USED FOR ANY PURPOSE OR COPIED OR COMMUNICATED TO ANY OTHER PERSON WITHOUT WRITTEN PERMISSION FROM EAGLE COPTERS MAINTENANCE LTD.

CHAPTER 11 – PLACARDS AND MARKINGS (11-00-00)

11.0 PLACARDS AND MARKINGS

11.1 PLACARDS

Decals, stencils, and markings used on Model 212 helicopters are shown on Figure 11-1. The first part of this figure shows sections, views, and details on the helicopter. Subsequent parts of the figure show detailed appearance, quantity, and location of each unit by an item number. A heavy black asterisk (*) in front of certain index numbers indicates the item is required by government regulation.

NOTE

The decals shown in detail views are typical for helicopters being delivered at the time this manual was published. Therefore, the decals shown may be different than those originally supplied on any other particular helicopter. The decals shown are, generally, the decal which will be supplied when replacements are ordered. In all cases, refer to BHT-212-IPB or IPC-D212-725 for ordering information and decal part numbers for a particular helicopter.

11.2 DECALS – APPLICATION

MATERIALS REQUIRED

NUMBER	NOMENCLATURE
C-233	Polyurethane Enamel
C-305	Aliphatic Naphtha
C-306	Toluene
C-349	Edge Sealer
C-385	Isopropyl Alcohol
C-426	Masking Tape
C-516	Clean Cloth

NOTE

Receiving surfaces must be non-porous.

11.2.1 Remove dirt, grease, wax, or other contaminants from the surfaces to be bonded, as follows:

11.2.1.1 For non-metallic and painted surfaces, clean with a clean cloth moistened with aliphatic naphtha (C-305). Dry surfaces with a clean cloth (C-516) before the aliphatic naphtha (C-305) evaporates.

CAUTION

DO NOT ALLOW TOLUENE (C-306) TO MAKE CONTACT WITH PAINTED OR NON-METALLIC SURFACES. DAMAGE TO THE SURFACE MAY OCCUR.

11.2.1.2 For bare metal surfaces, clean with a clean cloth moistened with toluene (C-306). Dry the surfaces with a clean cloth (C-516) before the toluene (C-306) evaporates.

11.2.2 Apply the pressure-sensitive (adhesive-backed) decal to the bonding surface, as follows:

11.2.2.1 Apply the decal at temperature above 60°F (16°C) for best results. Otherwise, first apply solvent (refer to manufacturer's instructions) or isopropyl alcohol (C-385) to the decal.

11.2.2.2 Remove the adhesive protection from one edge of the decal with a quick smooth movement.

11.2.2.3 Carefully align the decal in the correct position.

11.2.2.4 Put the peeled edge of the decal on the edge of the bonding surface and apply firm pressure with your finger along the seam edge.

NOTE

For application of large decals, use a plastic squeegee with a firm pressure.

11.2.2.5 While you continue to remove the adhesive protection, apply finger pressure to the remaining part of the decal until the entire decal is applied. For the best result, hold the opposite edge away from the surface until the entire decal is applied.

11.2.2.6 Make sure there are no air bubbles trapped under the decal. Otherwise, make a hole in the bubble with a pin and press

• COPYRIGHT © 2023 BY EAGLE COPTERS MAINTENANCE LTD. •
THIS DOCUMENT IS PRIVATE AND CONFIDENTIAL AND IS SUPPLIED ON THE EXPRESS CONDITION THAT IT IS NOT TO BE USED FOR ANY PURPOSE OR COPIED OR COMMUNICATED TO ANY OTHER PERSON WITHOUT WRITTEN PERMISSION FROM EAGLE COPTERS MAINTENANCE LTD.

with your finger or a squeegee to remove the air.

11.2.3 Edge seal or fully coat the decal with the applicable coating, as follows:

11.2.3.1 Apply masking tape (C426) 1/8 inch (3 mm) away from the edge and all around the decal.

NOTE

A clear polyurethane enamel (C-233) may be used to seal decals applied to all types of exterior finishes.

11.2.3.2 For the sealing of exterior decals, apply the same material used for the exterior painting. For example, if the exterior paint is polyurethane enamel (C-233), then use a clear polyurethane enamel (C2-33).

11.2.3.3 For the sealing of interior decals, apply a clear decal sealer. (C-349).

11.2.3.4 Remove the masking tape (C-426) from around the decal when the coating is dry.

• COPYRIGHT © 2023 BY EAGLE COPTERS MAINTENANCE LTD. •
THIS DOCUMENT IS PRIVATE AND CONFIDENTIAL AND IS SUPPLIED ON THE EXPRESS CONDITION THAT IT IS NOT TO BE USED FOR ANY PURPOSE OR COPIED OR COMMUNICATED TO ANY OTHER PERSON WITHOUT WRITTEN PERMISSION FROM EAGLE COPTERS MAINTENANCE LTD.

CHAPTER 11 – PLACARDS AND MARKINGS (11-00-00)

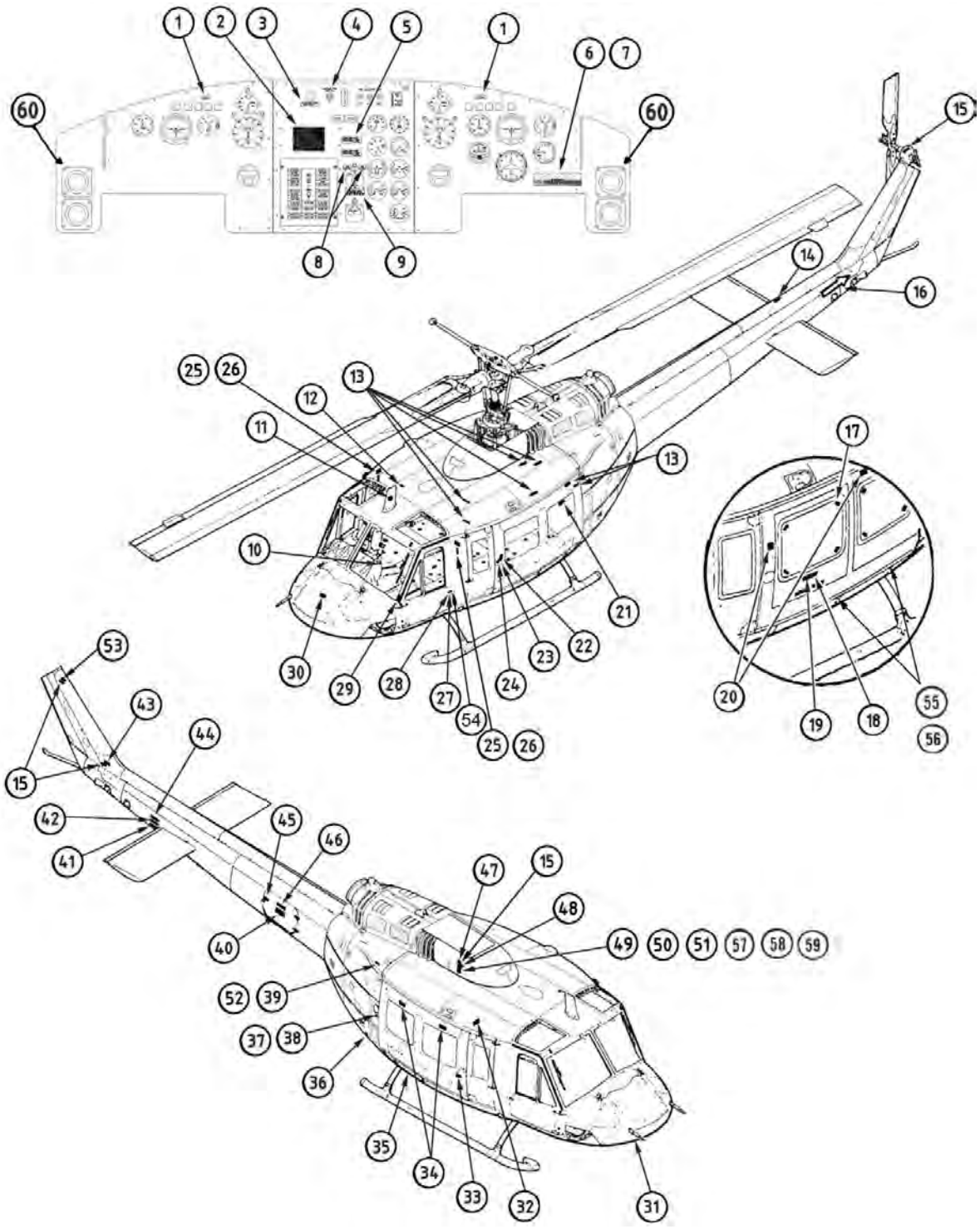

Figure 11-1. Placards and Markings

• COPYRIGHT © 2007 BY DART AEROSPACE LTD. •
THIS DOCUMENT IS PRIVATE AND CONFIDENTIAL AND IS SUPPLIED ON THE EXPRESS CONDITION THAT IT IS NOT TO BE USED FOR ANY PURPOSE OR COPIED OR COMMUNICATED TO ANY OTHER PERSON WITHOUT WRITTEN PERMISSION FROM DART AEROSPACE LTD.

CHAPTER 11 – PLACARDS AND MARKINGS (11-00-00)

RADIO CALL

*1 Radio Call Plate

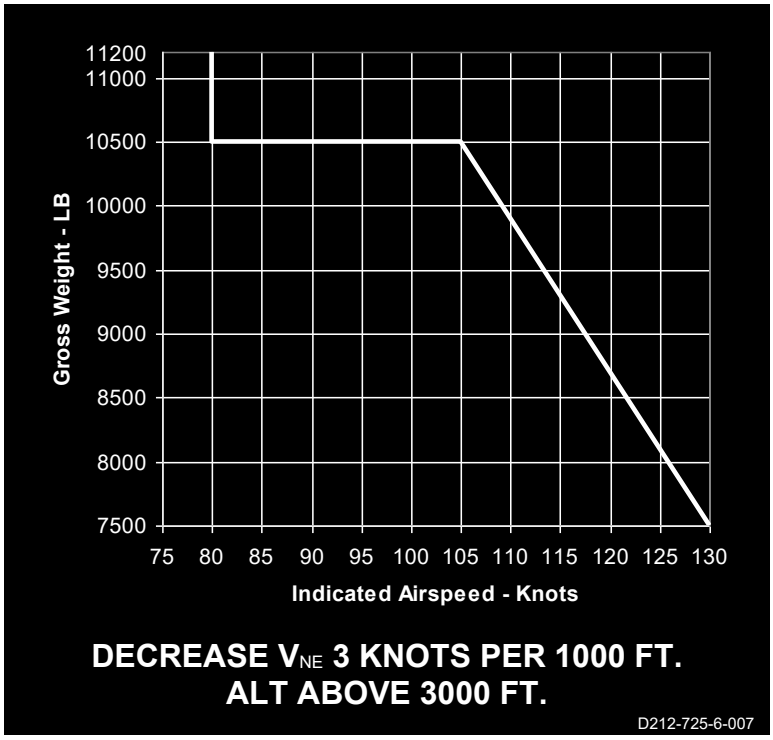

*2 Operation Limitations (typical)

DO NOT OPERATE HEATER
ABOVE 21°C O.A.T.

*3 Heater

CARGO FIRE
TEST SWITCH

*4 Cargo Fire Test Switch

• COPYRIGHT © 2023 BY EAGLE COPTERS MAINTENANCE LTD. •
THIS DOCUMENT IS PRIVATE AND CONFIDENTIAL AND IS SUPPLIED ON THE EXPRESS CONDITION THAT IT IS NOT TO BE USED FOR ANY PURPOSE OR COPIED OR COMMUNICATED TO ANY OTHER PERSON WITHOUT WRITTEN PERMISSION FROM EAGLE COPTERS MAINTENANCE LTD.

CHAPTER 11 – PLACARDS AND MARKINGS (11-00-00)

MAXIMUM GAS PRODUCER SPEED

TAKEOFF POWER = 105.0%
MAX. CONT. POWER = 101.0%

D212-725-6-003

*5 Operating Limitations

THE FOLLOWING EGT LIMITS ARE APPLICABLE AND SUPERSEDE THE EGT LIMITS INDICATED ON THE BELL EGT. VS. OAT. GAUGE WHEN THE T5317A ENGINE IS INSTALLED

EGT VS OAT LIMITS (°C)

OAT	-54	-50	-40	-30	-20	-10	0	10	20	30	40	50	52
T.O./M.C.	618 / 589	618 / 591	622 / 594	626 / 598	630 / 602	635 / 607	640 / 614	646 / 622	652 / 631	659 / 641	668 / 651	678 / 663	680 / 665

D212-725-6-005

*6 EGT VS OAT LIMITS (T5317A ONLY)

THIS AIRCRAFT IS EQUIPPED WITH A SINGLE T5317A/B ENGINE AND APPROVED FOR DAY/NIGHT VFR OPERATIONS ONLY (NO IFR, NO ICING) WITH 9 PASSENGERS OR LESS. SEE DART AEROSPACE FLIGHT MANUAL SUPPLEMENT FMS-D212-725-1 FOR MODIFIED OPERATING LIMITATIONS, PROCEDURES, PERFORMANCE DATA, AND APPROVED SEATING CONFIGURATIONS.

D212-725-6-001

*7 VFR OPERATIONS ONLY

CAP.
270 LBS

*8 Fuel System Capacity

FUEL SYSTEM CAPACITY
TOTAL BASIC SHIP 1400 LBS
WITH 044 AUX KIT 1700 LBS
WITH 045 AUX KIT 2600 LBS

D212-725-6-009

*9 Fuel System Capacity

• COPYRIGHT © 2023 BY EAGLE COPTERS MAINTENANCE LTD. •
THIS DOCUMENT IS PRIVATE AND CONFIDENTIAL AND IS SUPPLIED ON THE EXPRESS CONDITION THAT IT IS NOT TO BE USED FOR ANY PURPOSE OR COPIED OR COMMUNICATED TO ANY OTHER PERSON WITHOUT WRITTEN PERMISSION FROM EAGLE COPTERS MAINTENANCE LTD.

CHAPTER 11 – PLACARDS AND MARKINGS (11-00-00)



(10) HEAT SELECTOR



(11) Bell Insignia

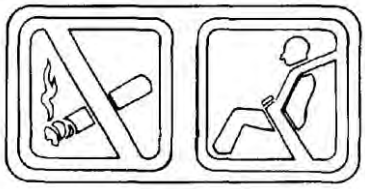

*(12) Illuminated Sign

STRUCTURAL PANEL
REQUIRED GROUND
RUN AND FLIGHT

*(13) This panel must be installed for all flights

• COPYRIGHT © 2023 BY EAGLE COPTERS MAINTENANCE LTD. •
THIS DOCUMENT IS PRIVATE AND CONFIDENTIAL AND IS SUPPLIED ON THE EXPRESS CONDITION THAT IT IS NOT TO BE USED FOR ANY PURPOSE OR COPIED OR COMMUNICATED TO ANY OTHER PERSON WITHOUT WRITTEN PERMISSION FROM EAGLE COPTERS MAINTENANCE LTD.

CHAPTER 11 – PLACARDS AND MARKINGS (11-00-00)

INSTALL SHAFT CLAMPS
INDEXED 90° TO EACH OTHER
TORQUE TO 30-35 IN-LB

(14) Torque Limits, Tail Rotor Driveshaft Clamps

SERVICE WITH MIL-L-7808 OIL
OR MIL-L-23699 OIL
DO NOT MIX
SEE FLIGHT MANUAL

*(15) Approved Lubricants

DANGER

(16) Decal LH Shown
(Decal RH Opposite)

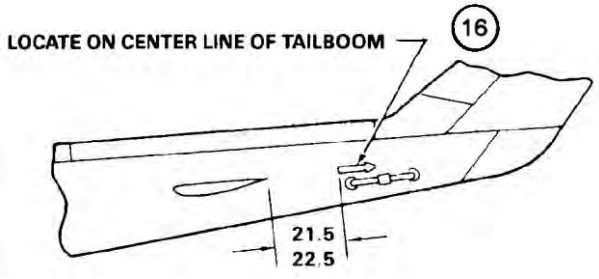

• COPYRIGHT © 2023 BY EAGLE COPTERS MAINTENANCE LTD. •
THIS DOCUMENT IS PRIVATE AND CONFIDENTIAL AND IS SUPPLIED ON THE EXPRESS CONDITION THAT IT IS NOT TO BE USED FOR ANY PURPOSE OR COPIED OR COMMUNICATED TO ANY OTHER PERSON WITHOUT WRITTEN PERMISSION FROM EAGLE COPTERS MAINTENANCE LTD.

CHAPTER 11 – PLACARDS AND MARKINGS (11-00-00)

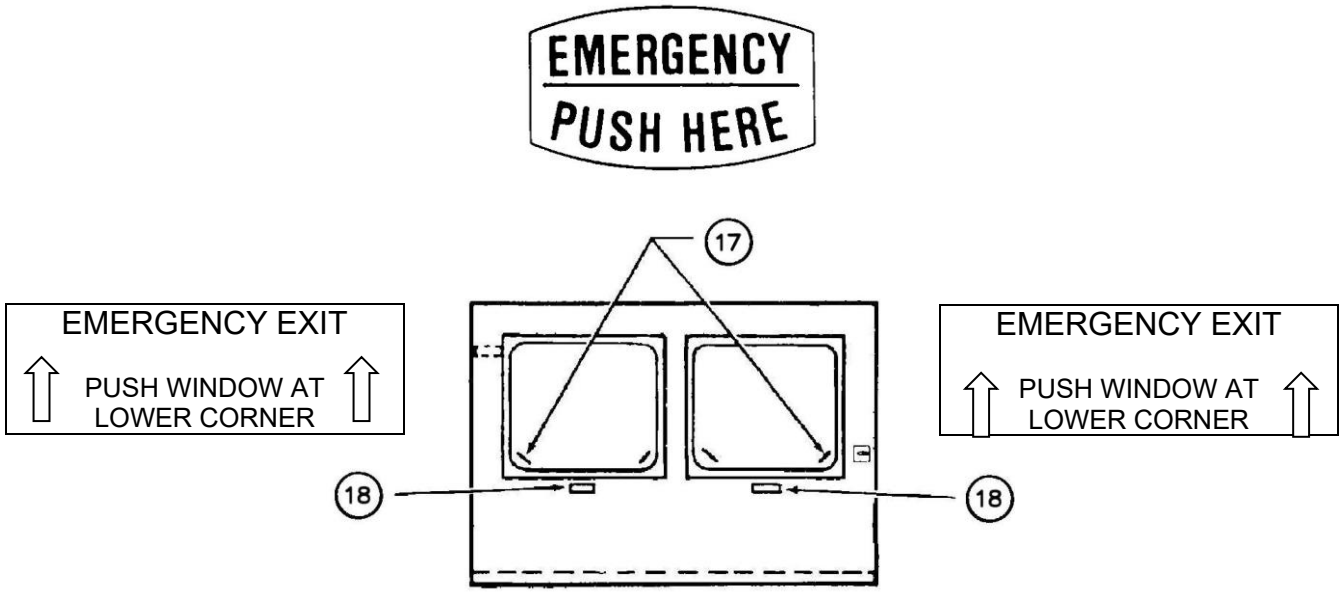

View A

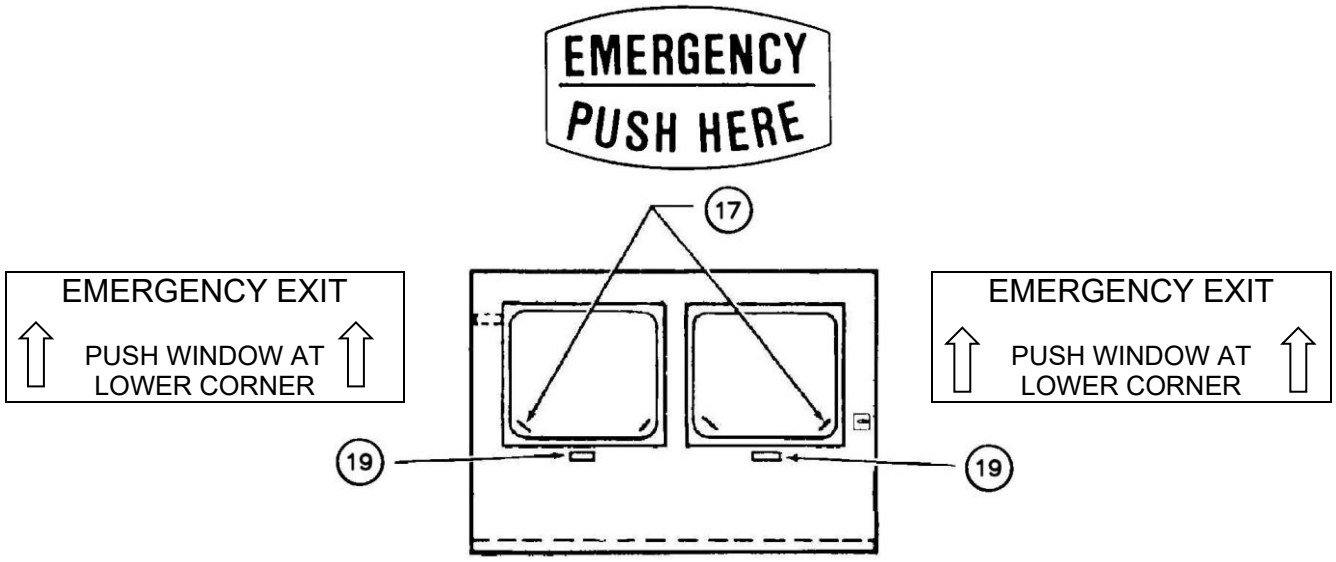

View B

NOTE

For outside door markings, refer to View A, and for inside door markings for doors with push-out windows, refer to View B.

• COPYRIGHT © 2023 BY EAGLE COPTERS MAINTENANCE LTD. •
THIS DOCUMENT IS PRIVATE AND CONFIDENTIAL AND IS SUPPLIED ON THE EXPRESS CONDITION THAT IT IS NOT TO BE USED FOR ANY PURPOSE OR COPIED OR COMMUNICATED TO ANY OTHER PERSON WITHOUT WRITTEN PERMISSION FROM EAGLE COPTERS MAINTENANCE LTD.

CHAPTER 11 – PLACARDS AND MARKINGS (11-00-00)

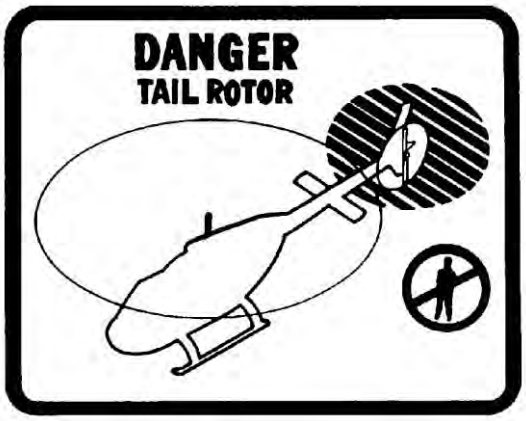

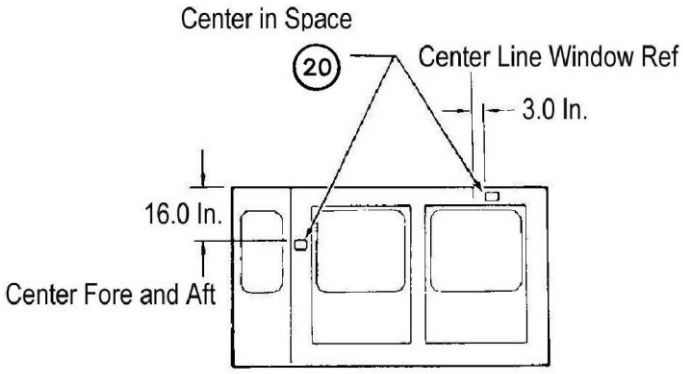

(20) Decal – 2 Required

STRUCTURAL PANEL
REQUIRED GROUND
RUN AND FLIGHT

*(21) Structural Panel Requirements



*(22) Door Lock

LOCKED

*(23) Door Lock

• COPYRIGHT © 2023 BY EAGLE COPTERS MAINTENANCE LTD. •
THIS DOCUMENT IS PRIVATE AND CONFIDENTIAL AND IS SUPPLIED ON THE EXPRESS CONDITION THAT IT IS NOT TO BE USED FOR ANY PURPOSE OR COPIED OR COMMUNICATED TO ANY OTHER PERSON WITHOUT WRITTEN PERMISSION FROM EAGLE COPTERS MAINTENANCE LTD.

CHAPTER 11 – PLACARDS AND MARKINGS (11-00-00)

OPEN

✻24 Door Lock



✻25 Fire Extinguisher



✻26 Fire Extinguisher (31-043-14CGL)

TURN AND PULL

✻27 Turn and Pull

EMERGENCY EXIT

✻28 Emergency Exit

PULL

✻29 Pull

• COPYRIGHT © 2023 BY EAGLE COPTERS MAINTENANCE LTD. •
THIS DOCUMENT IS PRIVATE AND CONFIDENTIAL AND IS SUPPLIED ON THE EXPRESS CONDITION THAT IT IS NOT TO BE USED FOR ANY PURPOSE OR COPIED OR COMMUNICATED TO ANY OTHER PERSON WITHOUT WRITTEN PERMISSION FROM EAGLE COPTERS MAINTENANCE LTD.

CHAPTER 11 – PLACARDS AND MARKINGS (11-00-00)

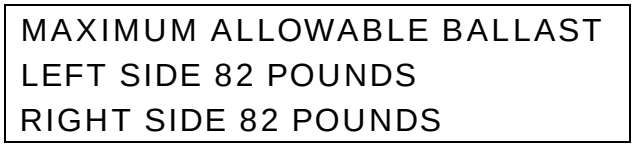

*30 Maximum Allowable Ballast



31 28 Volt D.C.

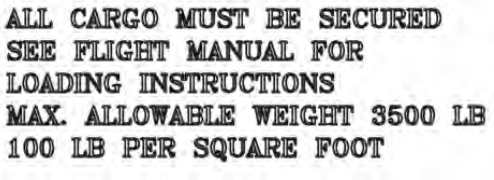

*32 Max. Allowable Weight



*33 Door Lock



*34 Emergency Exit

• COPYRIGHT © 2023 BY EAGLE COPTERS MAINTENANCE LTD. •
THIS DOCUMENT IS PRIVATE AND CONFIDENTIAL AND IS SUPPLIED ON THE EXPRESS CONDITION THAT IT IS NOT TO BE USED FOR ANY PURPOSE OR COPIED OR COMMUNICATED TO ANY OTHER PERSON WITHOUT WRITTEN PERMISSION FROM EAGLE COPTERS MAINTENANCE LTD.

CHAPTER 11 – PLACARDS AND MARKINGS (11-00-00)

PUSH FOR FUEL
SUMP DRAIN

(35) Fuel Sump Drain

G
R H
O E
U R
N E
D

(36) Ground Here

FUEL
FUEL SYSTEM CAPACITY
BASIC AIRCRAFT 220 US GAL
WITH 044 AUX KIT 260 US GAL
WITH 045 AUX KIT 400 US GAL
FUEL TYPE PER PWA/ SPEC 522
SEE FLIGHT MANUAL FOR APPROVED FUEL

*(37) Fuel System Capacity

FOR OPERATING TEMPERATURES BELOW
40°F OAT, FUEL USED MUST CONTAIN
PFA-55MB ADDITIVE, CONCENTRATION
TO BE .06% - .15% BY VOLUME

(38) Decal – 1 required

• COPYRIGHT © 2023 BY EAGLE COPTERS MAINTENANCE LTD. •
THIS DOCUMENT IS PRIVATE AND CONFIDENTIAL AND IS SUPPLIED ON THE EXPRESS CONDITION THAT IT IS NOT TO BE USED FOR ANY PURPOSE OR COPIED OR COMMUNICATED TO ANY OTHER PERSON WITHOUT WRITTEN PERMISSION FROM EAGLE COPTERS MAINTENANCE LTD.

CHAPTER 11 – PLACARDS AND MARKINGS (11-00-00)

SERVICE GEARBOX WITH ASTO 555 OR
MIL-L-23699 OIL OR MIL-L-7808 OIL
DO NOT MIX
SEE FLIGHT MANUAL

(39) Decal – 2 Required

MAXIMUM ALLOWABLE
WEIGHT 400 LBS
100 LBS. PER SQ FT.

*(40) Maximum Allowable Weight

FULL FWD CYCLIC STICK RIVET R

(41) Rigging Rivet

FULL AFT CYCLIC STICK RIVET S

(42) Rigging Rivet

42° GEARBOX OIL
CAPACITY 0.2 US QTS = 0.2 LITERS

*(43) Capacity

• COPYRIGHT © 2023 BY EAGLE COPTERS MAINTENANCE LTD. •
THIS DOCUMENT IS PRIVATE AND CONFIDENTIAL AND IS SUPPLIED ON THE EXPRESS CONDITION THAT IT IS NOT TO BE USED FOR ANY PURPOSE OR COPIED OR COMMUNICATED TO ANY OTHER PERSON WITHOUT WRITTEN PERMISSION FROM EAGLE COPTERS MAINTENANCE LTD.

CHAPTER 11 – PLACARDS AND MARKINGS (11-00-00)



(44) Rigging Rivet

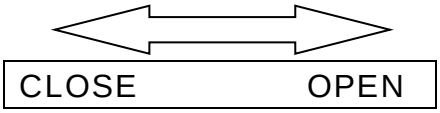

(45) Close and Open



*(46) Cargo Securing



(47) Hydraulic Reservoir Inside



(48) Transmission Oil Access

• COPYRIGHT © 2023 BY EAGLE COPTERS MAINTENANCE LTD. •
THIS DOCUMENT IS PRIVATE AND CONFIDENTIAL AND IS SUPPLIED ON THE EXPRESS CONDITION THAT IT IS NOT TO BE USED FOR ANY PURPOSE OR COPIED OR COMMUNICATED TO ANY OTHER PERSON WITHOUT WRITTEN PERMISSION FROM EAGLE COPTERS MAINTENANCE LTD.

CHAPTER 11 – PLACARDS AND MARKINGS (11-00-00)

TRANSMISION OIL
CAPACITY 11.0 US QTS =10.4 LITERS

(49) Capacity

205-075-058 RESERVOIR
TOTAL SYSTEM CAP. 10 US PTS – 4.7 LITERS
RESERVOIR CAP. 5.3 US PTS – 2.5 LITERS
REFILL LEVEL CAP. 2.5 US PTS – 1.2 LITERS
USE MIL-H-5606 HYDRAULIC FLUID
SERVICE INSTRUCTIONS
WHEN FLUID LEVEL IS VISIBLE
FILL TO OVERFLOW

(50) Hydraulic System Servicing

CAUTION
USE ONLY FREON
BASED CLEANERS
FOR CLEANING

(51) Hydraulic System Reservoir Cleaning

• COPYRIGHT © 2023 BY EAGLE COPTERS MAINTENANCE LTD. •
THIS DOCUMENT IS PRIVATE AND CONFIDENTIAL AND IS SUPPLIED ON THE EXPRESS CONDITION THAT IT IS NOT TO BE USED FOR ANY PURPOSE OR COPIED OR COMMUNICATED TO ANY OTHER PERSON WITHOUT WRITTEN PERMISSION FROM EAGLE COPTERS MAINTENANCE LTD.

CHAPTER 11 – PLACARDS AND MARKINGS (11-00-00)

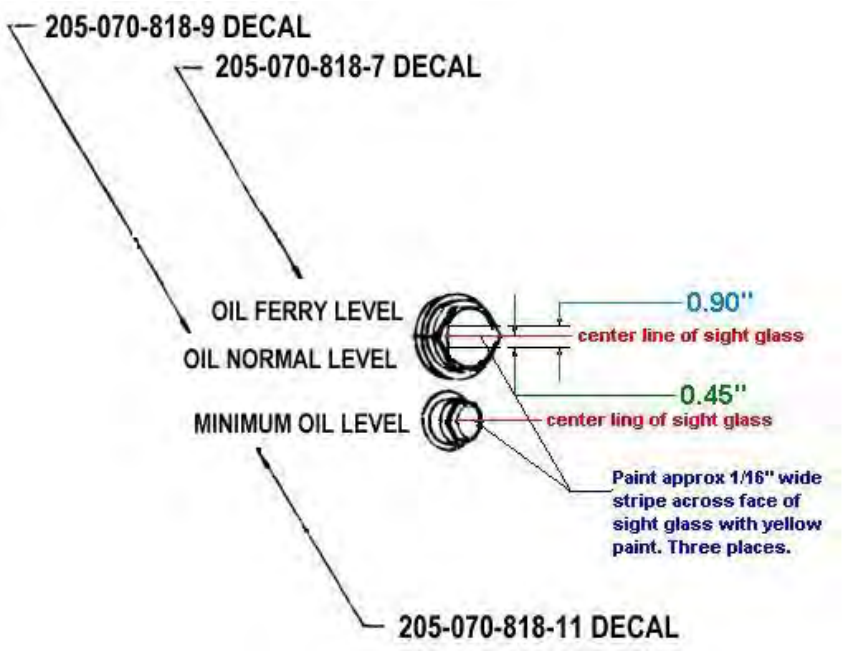

52 Engine Oil Tank Decals

90° GEARBOX OIL
CAPACITY 0.4 US QTS – 0.4 LITERS

53 90° Gearbox Capacity



54 Eagle Single Identification Placard
(Mounted above Aircraft Data Plate)

• COPYRIGHT © 2023 BY EAGLE COPTERS MAINTENANCE LTD. •
THIS DOCUMENT IS PRIVATE AND CONFIDENTIAL AND IS SUPPLIED ON THE EXPRESS CONDITION THAT IT IS NOT TO BE USED FOR ANY PURPOSE OR COPIED OR COMMUNICATED TO ANY OTHER PERSON WITHOUT WRITTEN PERMISSION FROM EAGLE COPTERS MAINTENANCE LTD.

CHAPTER 11 – PLACARDS AND MARKINGS (11-00-00)

55

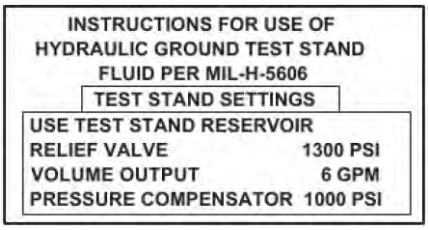

Applicable for helicopters Pre TB 212-12-213.

56



Applicable for helicopters Post TB 212-12-213.

57

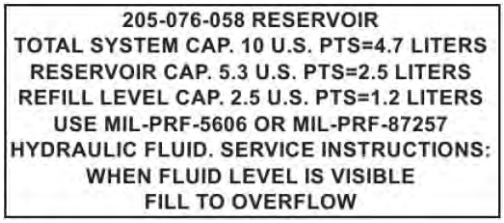

Applicable for helicopters Post TB 212-12-213 equipped with hydraulic reservoir P/N 205-076-058-XXX (PEEK plastic).

58

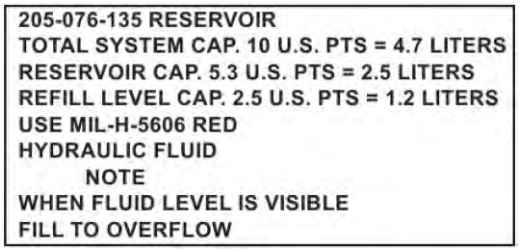

Applicable for helicopters Pre TB 212-12-213 equipped with hydraulic reservoir P/N 205-076-135-XXX (magnesium alloy)

59

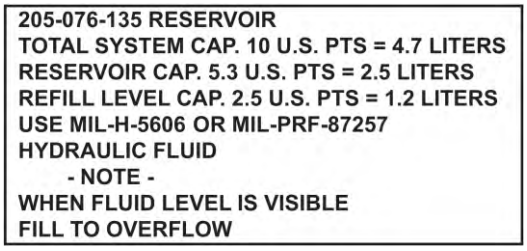

Applicable for helicopters Post TB 212-12-213 equipped hydraulic reservoir P/N 205-076-135-XXX (magnesium alloy).

• COPYRIGHT © 2023 BY EAGLE COPTERS MAINTENANCE LTD. •
THIS DOCUMENT IS PRIVATE AND CONFIDENTIAL AND IS SUPPLIED ON THE EXPRESS CONDITION THAT IT IS NOT TO BE USED FOR ANY PURPOSE OR COPIED OR COMMUNICATED TO ANY OTHER PERSON WITHOUT WRITTEN PERMISSION FROM EAGLE COPTERS MAINTENANCE LTD.

CHAPTER 11 – PLACARDS AND MARKINGS (11-00-00)



Applicable for helicopters equipped with TBN-212-002

• COPYRIGHT © 2023 BY EAGLE COPTERS MAINTENANCE LTD. •
THIS DOCUMENT IS PRIVATE AND CONFIDENTIAL AND IS SUPPLIED ON THE EXPRESS CONDITION THAT IT IS NOT TO BE USED FOR ANY PURPOSE OR COPIED OR COMMUNICATED TO ANY OTHER PERSON WITHOUT WRITTEN PERMISSION FROM EAGLE COPTERS MAINTENANCE LTD.

CHAPTER 12
SERVICING
(12-00-00)

• COPYRIGHT © 2007 BY DART AEROSPACE LTD. •
THIS DOCUMENT IS PRIVATE AND CONFIDENTIAL AND IS SUPPLIED ON THE EXPRESS CONDITION THAT IT IS NOT TO BE USED FOR ANY PURPOSE OR COPIED OR COMMUNICATED TO ANY OTHER PERSON WITHOUT WRITTEN PERMISSION FROM DART AEROSPACE LTD.

TABLE OF CONTENTS

Table of Contents 2
Consumable Materials List 3
12.1 Servicing 4
12.1A Servicing Tolerance 4
12.2 Main Fuel System 4
12.3 Main Fuel System - Refueling/De-fueling Preparation 4
12.4 Main Fuel System - Fueling 5
12.5 Main Fuel System - Defueling 7
12.6 Main Fuel System - Purging Fuel Cells 8
12.7 Oil System 9
12.8 Changing Oil Types 9
12.9 Engine Oil System 9
12.10 Transmission Oil System 10
12.11 Transmission Oil System - Seepage Rates 10
12.12 Tail Rotor Gearboxes 10
12.13 Tail Rotor and Intermediate Gearbox Oil Systems - Seepage Rates 10
12.14 Main Rotor Hub 10
12.15 Stabilizer Bar Dampers 10
12.16 Hydraulic System 10
12.17 Rotor Brake Servicing 11
12.17A Hydraulic Fluid Conversion – Change of Specification 11
12.18 Battery 15
12.19 Fire Extinguishers 15
12.19.1 Engine fire extinguisher bottles 15
12.19.2 Portable fire extinguishers 15
12.20 Lubrication 15
12.21 Lubrication symbols 16
12.22 Lubrication - Lubricant Restrictions (204-040-755-005) 16
12.23 Flexible Coupling Lubrication Log 17

LIST OF FIGURES

Figure 12-1. Servicing Points 19
Figure 12-2. Rotor Brake Servicing 20
Figure 12-3. Lubrication Chart (Sheet 1 of 4) 21
Figure 12-3. Lubrication Chart (Sheet 2 of 4) 22
Figure 12-3. Lubrication Chart (Sheet 3 of 4) 23
Figure 12-3. Lubrication Chart (Sheet 4 of 4) 24

LIST OF TABLES

Table 12-1. Servicing materials and capacities 6
Table 12-2. Flex couplings lubrication log (EXAMPLE ONLY) 18

• COPYRIGHT © 2007 BY DART AEROSPACE LTD. •
THIS DOCUMENT IS PRIVATE AND CONFIDENTIAL AND IS SUPPLIED ON THE EXPRESS CONDITION THAT IT IS NOT TO BE USED FOR ANY PURPOSE OR COPIED OR COMMUNICATED TO ANY OTHER PERSON WITHOUT WRITTEN PERMISSION FROM DART AEROSPACE LTD.

CONSUMABLE MATERIALS LIST

The following consumable materials are required to perform the maintenance procedures within this chapter.

ITEM No.	NOMENCLATURE	GAGE/FSCM/ SOURCE
C-009	Lubricating Oil, Grade 1010, MIL-L-6081	Commercial

• COPYRIGHT © 2007 BY DART AEROSPACE LTD. •
THIS DOCUMENT IS PRIVATE AND CONFIDENTIAL AND IS SUPPLIED ON THE EXPRESS CONDITION THAT IT IS NOT TO BE USED FOR ANY PURPOSE OR COPIED OR COMMUNICATED TO ANY OTHER PERSON WITHOUT WRITTEN PERMISSION FROM DART AEROSPACE LTD.

12.1 SERVICING

CAUTION

STAINED OR DISCOLORED SIGHT GAGE GLASSES MAY GIVE FALSE INDICATION OF OIL/FLUID QUANTITY. IF FALSE INDICATION IS SUSPECTED, SHAKE HELICOPTER BY TAIL SKID AND OBSERVE OIL/FLUID MOVEMENT. REPLACE ANY SIGHT GAGE GLASS WHICH DOES NOT PROVIDE ADEQUATELY CLEAR INDICATION OF OIL/FLUID LEVEL.

This Chapter contains instructions to replenish fuel, lubricating oil, hydraulic fluid, and to lubricate the helicopter. De-fueling and fuel cell purging are also included.

Figure 12-1 identifies servicing points, de-fueling, and drain valve locations. Table 12-1 specifies useable materials for fuel, lubricating oil and hydraulic fluid.

12.1A SERVICING TOLERANCE

CAUTION

DO NOT APPLY THESE TOLERANCES IF THE HELICOPTER IS OPERATED IN EXTREME ENVIRONMENTAL CONDITIONS REQUIRING AN INCREASED FREQUENCY OF SERVICING. OTHERWISE, DAMAGE TO THE PARTS MAY OCCUR.

The Bell Helicopter Textron approved tolerance for Chapter 12 servicing intervals, unless otherwise stated, is 10% of the specified hourly or calendar time interval, whichever is less. The tolerances are established for maintenance scheduling convenience only.

Servicing intervals required beyond the stated tolerances must be approved by Product Support Engineering.

NOTE

The following is only applicable for those operators whose governing aviation authority requires to specifically approve the servicing tolerance.

If approval of the servicing tolerance is required by the applicable governing aviation authority, this is the responsibility of the owner/operator.

Refer to the Honeywell T5317 Maintenance Manual for the engine servicing tolerances.

12.2 MAIN FUEL SYSTEM

All five interconnected cells of the main fuel system are serviced through a single filler located on right side of the helicopter. A grounding jack is provided near the filler. Sump drains are located in the bottom of right and left fuel cells beneath the cabin floor. System de-fuel valves are accessible through the bottom skin behind aft cabin bulkhead. A system filter is located on the left hand forward engine bulkhead. The filter is connected to the caution panel for indication of impending bypass condition.

12.3 MAIN FUEL SYSTEM - REFUELING/DE-FUELING PREPARATION

WARNING

USE EXTREME CAUTION DURING FUELING/DE-FUELING PROCEDURES

FUEL IS EXTREMELY FLAMMABLE AND MAY BE IGNITED BY STATIC OR FRICTION SPARKS, HOT EXHAUST PIPES, LIGHTED CIGARETTES, ELECTIRCAL DEVICES, OR SIMILAR IGNITION SOURCES.

PERSONNEL SHOULD NOT BE ABOARD HELICOPTER DURING FUELING/DE-FUELING PROCEDURES.

WHEN HELICOPTER FUEL COMES INTO CONTACT WITH SKIN, A SOLVENT ACTION

• COPYRIGHT © 2007 BY DART AEROSPACE LTD. •
THIS DOCUMENT IS PRIVATE AND CONFIDENTIAL AND IS SUPPLIED ON THE EXPRESS CONDITION THAT IT IS NOT TO BE USED FOR ANY PURPOSE OR COPIED OR COMMUNICATED TO ANY OTHER PERSON WITHOUT WRITTEN PERMISSION FROM DART AEROSPACE LTD.

OCCURS WHICH REMOVES NATURAL FATS AND OIL WHICH MAY EXPOSE SKIN TO INFECTIOUS DERMATOSES. EXTENSIVE VAPOR INHALATION MAY CAUSE SERIOUS ILLNESS. ACCIDENTAL SWALLOWING OF FUELS WILL RESULT IN INTERNAL INJURY AND POSSIBLY DEATH. PERSONNEL SUBJECTED TO SPLASHED OR SPRAYED FUEL SHOULD REMOVE CONTAMINATED CLOTHING AS SOON AS POSSIBLE AND WASH DOWN/SHOWER WITH LARGE AMOUNTS OF WATER, DO NOT REMOVE CLOTHING NEAR POTENTIAL IGNITION SOURCES.

12.3.1 Allow only qualified personnel actually engaged in fueling/de-fueling operations in the area. Allow no one to carry matches, lighters, or other sparking or flame-producing devices in the area.

12.3.2 Do not perform fueling/de-fueling when high winds are considered hazardous or when electrical storms are within a 3 mile (5 km) radius of the area.

12.3.3 Do not allow personnel fueling/defueling the helicopter to wear shoes with protruding nails or taps, or static producing clothing such as nylon, rayon or wool.

12.3.4 Do not perform fueling/de-fueling operations near drainage ditches or low places where combustible vapors could accumulate.

12.3.5 Do not perform fueling/de-fueling operations in a hangar. Position helicopter at least 50 feet (15 m) from any building or smoking area, and at least 500 feet (152 m) from any radar system.

12.3.6 Do not allow another aircraft to operate within 100 feet (30 m) of the area.

12.3.7 Position servicing unit as far from helicopter as hose will permit, and such that it may be driven or towed away in case of an emergency. Set parking brake.

12.3.8 Position a fully charged, 50 lb. (22.68 kg) 002 fire extinguisher with an extension assembly in an accessible place. Make sure fire extinguishers on service unit are readily available.

12.3.9 Maintain clear paths for immediate evacuation of personnel and vehicles in case of emergency.

12.3.10 Do not allow other aircraft within 20 feet (6 m) of helicopter.

12.3.11 If fuel cell filler cap is to be removed for any reason other than fueling, grasp helicopter grounding jack adjacent to fuel cell filler cap with bare hands to dissipate static charge prior to removing cap.

CAUTION

ACCOMPLISH BONDING PROCEDURES IN THE FOLLOWING STEPS IN ORDER LISTED OR STATIC ELECTRICITY MAY CAUSE INJURY OR DAMAGE TO EQUIPMENT.

12.3.12 Bond fuel/de-fuel vehicle and helicopter as follows prior to removing fuel hose filler dust cap and/or helicopter fuel cell filler cap or prior to using de-fueling valve.

12.3.12.1 Bond fueling equipment to the helicopter by use of a cable.

12.3.12.2 Bond fuel hose nozzle with a nozzle bonding cable to one of the helicopter grounding jacks

12.4 MAIN FUEL SYSTEM - FUELING

12.4.1 Accomplish fueling preparation steps outlined in paragraph 12.3.

12.4.2 Make sure helicopter electrical power is off. If electrical power is required, turn BATTERY BUS 1 and 2 switches ON and position remaining switches as required prior to start of fueling operations. Do not accomplish further switching until fueling is complete except in an emergency condition.

• COPYRIGHT © 2007 BY DART AEROSPACE LTD. •
THIS DOCUMENT IS PRIVATE AND CONFIDENTIAL AND IS SUPPLIED ON THE EXPRESS CONDITION THAT IT IS NOT TO BE USED FOR ANY PURPOSE OR COPIED OR COMMUNICATED TO ANY OTHER PERSON WITHOUT WRITTEN PERMISSION FROM DART AEROSPACE LTD.

12.4.3 Confirm fuel in fueling vehicle is correct type prior to refueling. Refer to Table 12-1 for list of approved fuels.

NOTE

Comply with bonding instructions in paragraph 12.3.12 prior to accomplishing following steps.

12.4.4 Remove fuel hose nozzle dust cap.

12.4.5 Remove fuel cell filler cap.

CAUTION

DO NOT LEAVE NOZZLE UNATTENDED AT ANY TIME DURING REFUELING OPERATION.

12.4.6 Fill fuel cells and then remove hose nozzle from fuel cell.

12.4.7 Install filler cap and nozzle dust cap.

12.4.8 Place BATTERY BUS switches and required system switches to OFF, if required.

12.4.9 Remove fuel hose nozzle bonding cable from helicopter grounding jack.

12.4.10 Remove bonding cable from helicopter and fueling equipment.

12.4.11 In the event of a fire emergency, accomplish the following as quickly as possible:

12.4.11.1 Stop fuel flow.

12.4.11.2 Separate helicopter and service unit.

12.4.11.3 Sound alarm.

12.4.11.4 Attempt rescue and contain fire.

Table 12-1. Servicing materials and capacities

Name	Material Specification	Capacity	Remarks
	MAIN FUEL SYSTEM		
Turbine fuel	Refer to MD-D212-725-1	217.0 Gals. (US)	All ambient temperatures
	ENGINE OIL SYSTEM		
Lubricating oil	Refer to MD-D212-725-1	3.25 Gals. (US)	Do not mix oils
	TRANSMISSION OIL SYSTEM		
Lubricating oil	Refer to MD-D212-725-1	11.0 Qts.	Do not mix oils
	INTERMEDIATE GEARBOX		
Lubricating oil	Refer to MD-D212-725-1	0.19 Qts.	Do not mix oils
	TAIL ROTOR GEARBOX		
Lubricating oil	Refer to MD-D212-725-1	0.40 Qts.	Do not mix oils
	MAIN ROTOR HUB BLADE GRIPS		
Lubricating oil	Refer to MD-D212-725-1	1.0 Qt. Per grip	Do not mix oils
	PILLOW BLOCKS		
Lubricating oil	Refer to MD-D212-725-1	0.12 Qt. Per block	Do not mix oils
	HYDRAULIC SYSTEM No. 1		
Hydraulic Fluid	Refer to MD-D212-725-1	4.7 Qts.	
	HYDRAULIC SYSTEM No. 2		
Hydraulic Fluid	Refer to MD-D212-725-1	4.25 Qts.	
Hydraulic Fluid Reservoirs	Refer to MD-D212-725-1	2.64 Qts per reservoir	
	ROTOR BRAKE SYSTEM		
Hydraulic Fluid	Refer to MD-D212-725-1	1.00 Pint	

• COPYRIGHT © 2007 BY DART AEROSPACE LTD. •
THIS DOCUMENT IS PRIVATE AND CONFIDENTIAL AND IS SUPPLIED ON THE EXPRESS CONDITION THAT IT IS NOT TO BE USED FOR ANY PURPOSE OR COPIED OR COMMUNICATED TO ANY OTHER PERSON WITHOUT WRITTEN PERMISSION FROM DART AEROSPACE LTD.

CHAPTER 12 – SERVICING (12-00-00)

12.5 MAIN FUEL SYSTEM - DEFUELING

12.5.1 Comply with requirements of paragraph 12.3.

NOTE

If helicopter is being defueled with defueling type vehicle, accomplish step 12.5.2 through step 12.5.14.

If helicopter is being defueled with boost pumps, accomplish step 12.5.15.

12.5.2 Notify fire department of de-fueling operation location, anticipated start time, and estimated time of completion.

12.5.3 Make sure all electrical power is off.

NOTE

Comply with bonding instructions in step 12.3.12 of paragraph 12.3 prior to accomplishing following steps.

12.5.4 If helicopter is being defueled because of an accident or incident, or if quality of fuel is questionable, sample and test drained fuel. Dispose of fuel or return fuel to storage as test results indicate.

NOTE

Comply with bonding instructions in paragraph 12.3.12 prior to accomplishing following steps.

12.5.5 Make sure that all helicopter electrical power is off. If electrical power is required, turn BATTERY BUS switches ON and position other switches as required prior to starting defueling operation. Do not accomplish additional switching until defueling is complete, except as required by an emergency condition.

12.5.6 Remove filler cap and insert defueling tube/hose into helicopter fuel cell.

12.5.7 Pump fuel from helicopter. Stop pump as soon as fuel flow stops.

12.5.8 Remove defueling tube/hose and replace filler cap. Disconnect defuel tube/hose ground wire from helicopter.

12.5.9 Remove access plates under fuel cell sumps.

12.5.10 Position suitable container under helicopter.

12.5.11 Remove plugs from defuel valves.

12.5.12 Disconnect cable from helicopter and defueler equipment. Move defueler away from helicopter.

12.5.13 Dispose of fuel as noted in step 12.5.4.

12.5.14 Purge fuel cells as outlined in paragraph 12.6.

12.5.15 Defuel with helicopter boost pumps as follows:

12.5.15.1 Accomplish step 12.5.2 through 12.5.5.

12.5.15.2 Disconnect engine fuel pressure hose above engine deck. Connect a suitable hose to engine fuel pressure connection that will transfer fuel to a suitable container or servicing unit.

12.5.15.3 Actuate boost pump(s) to pump fuel out of helicopter.

12.5.15.4 Shut off boost pump as soon as fuel flow stops.

12.5.15.5 Install hose disconnected in step 12.5.15.2.

12.5.15.6 Disconnect grounding cables.

12.5.15.7 Dispose of fuel as noted in step 12.5.4.

12.5.15.8 Purge fuel cells (paragraph 12.6)

• COPYRIGHT © 2007 BY DART AEROSPACE LTD. •
THIS DOCUMENT IS PRIVATE AND CONFIDENTIAL AND IS SUPPLIED ON THE EXPRESS CONDITION THAT IT IS NOT TO BE USED FOR ANY PURPOSE OR COPIED OR COMMUNICATED TO ANY OTHER PERSON WITHOUT WRITTEN PERMISSION FROM DART AEROSPACE LTD.

CHAPTER 12 – SERVICING (12-00-00)

12.6 MAIN FUEL SYSTEM - PURGING FUEL CELLS

MATERIALS REQUIRED

NUMBER	NOMENCLATURE
C-009	Lubricating Oil

WARNING

ON A STILL DAY (NO WIND CONDITION), FUEL VAPOR CAN ACCUMULATE IN AREA OF HELICOPTER (EVEN IN AN OPEN AREA), POSSIBLY PRODUCING AN EXPLOSIVE MIXTURE. UNDER THIS CONDITION, PERSONNEL SHOULD BE CLEARED FROM AREA EVEN AFTER PURGE LINES ARE INSTALLED AND INERT GAS IS FLOWING UNTIL EIGHT HOURS OF PURGING IS COMPLETED.

12.6.1 Defuel helicopter (paragraph 12.5)

NOTE

Use dry, filtered compressed air or inert gas (nitrogen or carbon dioxide) as outlined in step 12.6.2 and 12.6.3.

12.6.2 Purge fuel cells using dry, filtered, compressed air as follows:

12.6.2.1 Open all sump drains and drain lines.

12.6.2.2 Insert compressed air hose in cell filler inlet, under cap and seal opening with masking tape.

12.6.2.3 Blow air through cells at 60 to 100 PSI (414 to 689 kPa) for a period of 8 hours.

12.6.2.4 Remove air hose from cell inlet. Wait 1 hour.

12.6.2.5 Check interior of fuel cell with explosimeter (combustible gas indicator calibrated for fuel vapors) for level of vapors.

12.6.2.6 Explosimeter reading shall be less than 20%. If reading is more than 20%, repeat step 12.6.2.1 through step 12.6.2.4 until reading is less than 20%.

12.6.3 Purge fuel cells using inert gas (nitrogen or carbon dioxide) as follows:

WARNING

REMOVE FIBER HORN WHEN USING A FIRE EXTINGUISHER BOTTLE AS A SOURCE OF CARBON DIOXIDE ($C0_2$) FOR PURGING FUEL CELLS. GROUND NOZZLE TO HELICOPTER. DISCHARGE INERT GAS INTO FUEL CELL SLOWLY AT A RATE OF ONE POUND PER MINUTE. RAPID PASSAGE OF GAS THROUGH A HOSE CAN GENERATE STATIC ELECTRICAL CHARGES. RAPID DISCHARGE OF THE GAS ALLOWS RAPID EXPANSION OF THE GAS, (LOWERING THE TEMPERATURE WITH POSSIBLE DAMAGE TO CELL AS A RESULT). NITROGEN GAS OR OTHER INERT GAS MAY BE USED WITH THE SAME PRECAUTIONARY MEASURES OUTLINED ABOVE.

12.6.3.1 Open all sump drains and drain lines.

12.6.3.2 Insert gas hose in cell filler inlet and seal with masking tape.

12.6.3.3 Blow inert gas through cells for a period of eight hours.

12.6.3.4 Shut off inert gas flow and remove inert gas hose from cell inlet. Wait one hour.

12.6.3.5 Check interior of fuel cell with explosimeter (combustible gas indicator calibrated for fuel vapors) for level of fuel vapors.

12.6.3.6 Explosimeter reading shall be less than 20%. If reading is more than 20%, repeat step 1 through step 3 until reading is less than 20 %.

12.6.4 Fog interior of fuel cell with lubricating oil (C-009). Close drains and replace filler cap. Do not close vents.

• COPYRIGHT © 2007 BY DART AEROSPACE LTD. •
THIS DOCUMENT IS PRIVATE AND CONFIDENTIAL AND IS SUPPLIED ON THE EXPRESS CONDITION THAT IT IS NOT TO BE USED FOR ANY PURPOSE OR COPIED OR COMMUNICATED TO ANY OTHER PERSON WITHOUT WRITTEN PERMISSION FROM DART AEROSPACE LTD.

12.7 OIL SYSTEM

The engine, transmission, tail rotor drive gearboxes and main rotor hub may be serviced with MIL-PRF-7808, MIL-PRF-23699, or DOD-PRF-85734 (C-030) (except engine) lubricating oil. Refer to MD-D212-725-1 for list of approved oils and restrictions.

It is recommended when systems are serviced, either for an oil change or routine quantity servicing, that the oil container be agitated prior to opening. If oil pressure fluctuation is accompanied by foaming, drain and service with agitated oil. When using quart cans, open end which has been on bottom during storage.

12.8 CHANGING OIL TYPES

NOTE

An appropriate entry shall be made in helicopter and engine logbooks. The entry shall show type and brand name of oil to prevent inadvertent mixing of lubricating oils. Refer to engine manufacturer's manual for additional information, and oil change intervals for the engine.

NOTE

Do not use MIL-PRF-23699 (C-011) or DOD-PRF-85734 (C-030) lubricating oil when ambient temperature falls below -40°F (-40°C).

12.8.1 Before changing types of oil from MIL-PRF-7808 (C-010) to MIL-PRF-23699 (C-011), or to DOD-PRF-85734 (C-030), replace decals shown in Chapter 11, with appropriate decals denoting type of oil in system.

NOTE

MIL-PRF-7808 (C-010), MIL-PRF-23699 (C-011), or DOD-PRF-85734 (C-030) lubricating oils should not be mixed. If this should occur, drain system and refill with approved oil.

12.8.2 To change oil type, perform the following steps:

12.8.2.1 Drain lubricating oil from system. Inspect and clean filter and strainers as required.

12.8.2.2 Fill oil system with specification of lubricating oil to be used.

12.8.2.3 Operate system for a period of 30 minutes to 1 hour to heat oil to operating temperature. Shut down engine.

12.8.2.4 Inspect and clean system oil filters and strainers. If heavy contamination of filters and strainers is noted, proceed with steps 12.8.2.5 through 12.8.2.8. If little or no contamination of filters and strainers is noted, release helicopter for service and proceed with steps 12.8.2.7 and 12.8.2.8.

12.8.2.5 Drain lubricating oil from oil system and discard oil.

12.8.2.6 Refill oil system with specification of lubricating oil to be used and release helicopter for service.

12.8.2.7 Inspection and cleaning of oil system filters and strainers is required after five and fifteen hours of operating time.

12.8.2.8 After fifteen hour inspection of oil system filters and strainers, revert to normal inspection interval.

12.9 ENGINE OIL SYSTEM

The supply tank for the engine oil system is located on the right side of the forward engine firewall. The oil level in the tank can be checked by viewing the sight gage indicators on the tank. The sight gage indicators are accessible through inspection door. For access to the filler cap and filler cap dipstick, the lower engine cowl must be removed. Service the tank with an authorized type MIL-PRF-7808 or type MIL-PRF-23699 oil. (Refer to MD-D212-725-1 for approved list.)

NOTE

Numbers 1 through 4 appearing on dipstick indicate level of oil in engine oil tank.

• COPYRIGHT © 2007 BY DART AEROSPACE LTD. •
THIS DOCUMENT IS PRIVATE AND CONFIDENTIAL AND IS SUPPLIED ON THE EXPRESS CONDITION THAT IT IS NOT TO BE USED FOR ANY PURPOSE OR COPIED OR COMMUNICATED TO ANY OTHER PERSON WITHOUT WRITTEN PERMISSION FROM DART AEROSPACE LTD.

12.10 TRANSMISSION OIL SYSTEM

The transmission sump case serves as the reservoir for this system. The filler is located on the upper right side of the transmission and is accessible when the forward pylon fairing is opened. Oil level sight gages may be viewed through right side of pylon support structure in cabin with aid of a light controlled by a push-button switch. A sump drain valve is located directly beneath the sump. An external filter, in return line from oil cooler, is located inside pylon structure at right side and has a red indicator which will be visible when filter is in impending bypass condition. Drain valves in oil collector lines are accessible through bottom fuselage skin inboard of F.S. 169.0. Refer to Table 12-1 (or MDL-D212-725-1) for list of approved oils and for location of filler. Maintenance practices are contained in Chapter 63.

12.11 TRANSMISSION OIL SYSTEM - SEEPAGE RATES

Main transmission oil seepage shall not exceed two drops per minutes from any single source or shall not exceed a total of 15 drops per minute from all sources on transmission.

12.12 TAIL ROTOR GEARBOXES

Oil level in the intermediate and tail rotor gearboxes may be checked on the sight gages and replenished, as required. Intermediate gearbox and tail rotor gearbox maintenance practices are contained in Chapter 63. Refer to Table 12-1 (or MD-D212-725-1) for list of approved oils.

12.13 TAIL ROTOR AND INTERMEDIATE GEARBOX OIL SYSTEMS - SEEPAGE RATES

Gearbox oil seepage shall not exceed 2 drops per minute from any single source or shall not exceed a total of 6 drops per minute from all sources on a gearbox.

12.14 MAIN ROTOR HUB

Transparent plastic sight gauges are on grip and pillow block reservoirs for checking oil level. Oil level shall be maintained at one-half indication. Refer to Table 12-1 (or MD-D212-725-1) for approved lubricants.

12.15 STABILIZER BAR DAMPERS

CAUTION

ONLY USE HYDRAULIC FLUID (C-002) MIL-PRF-5606 WHEN SERVICING THE STABILIZER BAR DAMPERS. USE OF HYDRAULIC FLUID (C-072) MIL-PRF-87257 IS NOT AUTHORIZED.

Check timing and service only as necessary (Chapter 62).

12.16 HYDRAULIC SYSTEM

Access to hydraulic reservoirs is gained by opening forward pylon fairing. The hydraulic system 1 reservoir is on right side and the hydraulic system 2 reservoir is on left side. Pressure and return filters, with red pop-out indicators that will be visible when filter requires change, are located in integrated valve and filter assemblies in pylon. The hydraulic system 1 integrated valve and filter assembly is located at lower front center of lift beam. The hydraulic system 2 integrated valve and filter assembly is aft of lift beam on left side of pylon.

NOTE

When adding hydraulic fluid, the same specification of hydraulic fluid already used in the system shall be used. However, in circumstances where emergency top-off or inadvertent mixing may occur, it is acceptable to use hydraulic fluid of the other approved specification. No further maintenance action will be required. To change the specification

• COPYRIGHT © 2007 BY DART AEROSPACE LTD. •
THIS DOCUMENT IS PRIVATE AND CONFIDENTIAL AND IS SUPPLIED ON THE EXPRESS CONDITION THAT IT IS NOT TO BE USED FOR ANY PURPOSE OR COPIED OR COMMUNICATED TO ANY OTHER PERSON WITHOUT WRITTEN PERMISSION FROM DART AEROSPACE LTD.

of hydraulic fluid used in the system, refer to paragraph 12.17A.

Filters may be checked from inside cabin through an access door on forward side of pylon structure. A supplemental indicator is located to right of helicopter centerline at W.L. 22.00, and is visible through lower right nose window. With engine running and hydraulic circuit breakers closed, either a green or black indication verifies systems are operating without clogging. Under the same circumstances, either red or a white indication warns there is an impending bypass condition.

The rotor brake hydraulic system is a separate self-contained system. See Figure 12-1 for location of filler, and Table 12-1 (or MD-D212-725-1) for approved lubricating fluids.

12.17 ROTOR BRAKE SERVICING

MATERIALS REQUIRED

NUMBER	NOMENCLATURE
C-002 or C-072	Hydraulic Fluid

The rotor brake hydraulic system is a separate, self contained system. See Figure 12-1 for location of filler, and Table 12-1 for approved lubricating fluids.

12.17.1 Fully apply rotor brake.

12.17.2 Remove reservoir filler cap (1, Figure 12-2) of rotor brake master cylinder (3), located on top, right forward area of cabin roof.

12.17.3 Check fluid level of reservoir is 0.050 inch (12.7 mm) below bottom of filler neck.

NOTE

When adding hydraulic fluid, the same specification of hydraulic fluid already used in the system shall be used. However, in circumstances where emergency top-off or inadvertent mixing may occur, it is acceptable to use hydraulic fluid of the other approved specification. No further maintenance action will be required. To change the specification of hydraulic fluid used in the system, refer to paragraph 12-17A.

12.17.4 If fluid level is low, replenish with hydraulic fluid (C-002) or hydraulic fluid (C-072).

12.17.5 Install reservoir filler cap (1).

12.17.6 Release rotor brake by returning rotor brake handle (4) of rotor brake master cylinder (3) to stow position.

12.17A HYDRAULIC FLUID CONVERSION – CHANGE OF SPECIFICATION

MATERIALS REQUIRED

Refer to BHT-ALL-SPM for specifications.

NUMBER	NOMENCLATURE
C-002	Hydraulic Fluid
C-072	Hydraulic Fluid

NOTE

Hydraulic fluid (C-002) and hydraulic fluid (C-072) are compatible and can be mixed.

NOTE

Hydraulic fluid (C-072) MIL-PRF-87257 was introduced as a customer option per TB 212-12-213. If a conversion from hydraulic fluid (C-002) MIL-PRF-5606 to hydraulic fluid (C-072) MIL-PRF-87257 is being accomplished for the first time, and as decal changes are required, accomplish the conversion in accordance with TB 212-12-213.

NOTE

In the event operators subsequently wish to convert their hydraulic systems to use hydraulic fluid (C-002) MIL-PRF-5606 or hydraulic fluid (C-072) MIL-PRF-87257, the following procedure is provided. Although the procedure is written with respect to converting from hydraulic fluid (C-002) MIL-PRF-5606 to hydraulic fluid (C-072) MIL-PRF-87257, the hydraulic fluid types specified in each step may be reversed to convert from hydraulic fluid (C-072) MIL-PRF-87257 to hydraulic fluid (C-002) MIL-PRF-5606.

• COPYRIGHT © 2007 BY DART AEROSPACE LTD. •
THIS DOCUMENT IS PRIVATE AND CONFIDENTIAL AND IS SUPPLIED ON THE EXPRESS CONDITION THAT IT IS NOT TO BE USED FOR ANY PURPOSE OR COPIED OR COMMUNICATED TO ANY OTHER PERSON WITHOUT WRITTEN PERMISSION FROM DART AEROSPACE LTD.

Complete each of the three hydraulic fluid conversion phases as follows:

PHASE 1:

NOTE

The hydraulic cart must conform to the requirements of Chapter 29.

12.17A.1 Prepare the hydraulic cart as follows:

NOTE

If the hydraulic cart does not have dual system hoses, do the following procedure before doing step 2 for the hydraulic system No. 1 and before doing step 2 for the hydraulic system No. 2.

12.17A.1.1 Drain the hydraulic cart until 50% of the hydraulic fluid (C-002) stays in the cart. Add hydraulic fluid (C-072) in the hydraulic cart until it is full.

NOTE

If the hydraulic cart does not have dual system hoses, do the following on the hydraulic system No. 1 and then repeat the procedure on the hydraulic system No. 2.

12.17A.2 Do the following steps on the hydraulic system No. 1 and No. 2 and the flight controls:

12.17A.2.1 Connect the hydraulic cart to the hydraulic test couplings of the hydraulic system No. 1 and No. 2 under the left sliding door of the helicopter.

12.17A.2.2 Turn electrical power on or apply external power to the helicopter.

12.17A.2.3 Turn the hydraulic cart on and apply 1000 PSI (6895 kPa) of pressure to both hydraulic systems.

12.17A.2.4 Let the hydraulic cart run for 30 minutes.

12.17A.2.5 Move the collective stick, cyclic stick, and pedals to operate all the flight control actuators through full travel for a minimum of five cycles.

12.17A.2.6 Operate the HYDR SYS No. 1 and HYDR SYS No. 2 switches between the On and OFF positions five times in approximately 2-second intervals.

12.17A.2.7 Turn the hydraulic cart off.

12.17A.2.8 Turn the electrical power off or disconnect external power from the helicopter.

12.17A.2.9 Disconnect the hydraulic cart from the hydraulic test couplings of the hydraulic system No. 1 and No. 2.

12.17A.3 For the rotor brake do as follows:

12.17A.3.1 Remove the applicable doors and panels to get access to the bleed valves of the rotor brake assembly.

NOTE

There is more than one type of rotor brake assembly. Use the correct instructions.

12.17A.3.2 Bleed each bleed valve of the brake assembly in accordance with the instructions provided in Chapter 63, then service the master cylinder with hydraulic fluid (C-072) (paragraph 12-17).

12.17A.3.3 Repeat step 12.18.3.2.

12.17A.3.4 Install the previously removed doors and panels.

PHASE 2: After 3 flight hours or 2 weeks following Phase 1.

12.17A.4 Prepare the hydraulic cart as follows:

NOTE

If the hydraulic cart does not have dual system hoses, do the following procedure before doing step 2 for the hydraulic system No. 1 and before doing

• COPYRIGHT © 2007 BY DART AEROSPACE LTD. •
THIS DOCUMENT IS PRIVATE AND CONFIDENTIAL AND IS SUPPLIED ON THE EXPRESS CONDITION THAT IT IS NOT TO BE USED FOR ANY PURPOSE OR COPIED OR COMMUNICATED TO ANY OTHER PERSON WITHOUT WRITTEN PERMISSION FROM DART AEROSPACE LTD.

step 2 for the hydraulic system No. 2.

12.17A.4.1 Fully drain the hydraulic cart.

12.17A.4.2 Fill the hydraulic cart to 75% of the total capacity with hydraulic fluid (C-072) and the remaining 25% with hydraulic fluid (C-002).

NOTE

If the hydraulic cart does not have dual system hoses, do the following on the hydraulic system No. 1 and then repeat the procedure on the hydraulic system No. 2.

12.17A.5 Do the following steps on the hydraulic system No. 1 and No. 2 and the flight controls:

12.17A.5.1 Connect the hydraulic cart to the hydraulic test couplings of the hydraulic system No. 1 and No. 2 under the left sliding door of the helicopter.

12.17A.5.2 Turn electrical power on or apply external power to the helicopter.

12.17A.5.3 Turn the hydraulic cart on and apply 1000 PSI (6895 kPa) of pressure to both hydraulic systems.

12.17A.5.4 Let the hydraulic cart run for 30 minutes.

12.17A.5.5 Move the collective stick, cyclic stick, and pedals to operate all the flight control actuators through full travel for a minimum of five cycles.

12.17A.5.6 Operate the HYDR SYS No. 1 and HYDR SYS No. 2 switches between the On and OFF positions five times in approximately 2-second intervals.

12.17A.5.7 Turn the hydraulic cart off.

12.17A.5.8 Turn the electrical power off or disconnect external power from the helicopter.

12.17A.5.9 Disconnect the hydraulic cart from the hydraulic test couplings of the hydraulic system No. 1 and No. 2.

12.17A.6 For the rotor brake do as follows:

12.17A.6.1 Remove the applicable doors and panels to get access to the bleed valves of the rotor brake assembly.

NOTE

There is more than one type of rotor brake assembly. Use the correct instructions.

12.17A.6.2 Bleed each bleed valve of the brake assembly in accordance with the instructions provided in Chapter 63, then service the master cylinder with hydraulic fluid (C-072) (paragraph 12-17).

12.17A.6.3 Repeat step 12.17A.6.2.

12.17A.6.4 Install the previously removed doors and panels.

PHASE 3: After 3 flight hours or 2 weeks following Phase 2.

12.17A.7 Prepare the hydraulic cart as follows:

12.17A.7.1 Fully drain the hydraulic cart.

12.17A.7.2 Fill the hydraulic cart with hydraulic fluid (C-072) until it is full.

NOTE

If the hydraulic cart does not have dual system hoses, do the following on the hydraulic system No. 1 and then repeat the procedure on the hydraulic system No. 2.

12.17A.8 Do the following steps on the hydraulic system No. 1 and No. 2 and the flight controls:

12.17A.8.1 Remove the forward pylon fairing to get access to the hydraulic reservoirs.

12.17A.8.2 Disconnect the hose from the suction outlet fitting of the hydraulic system No. 1 and No. 2

• COPYRIGHT © 2007 BY DART AEROSPACE LTD. •
THIS DOCUMENT IS PRIVATE AND CONFIDENTIAL AND IS SUPPLIED ON THE EXPRESS CONDITION THAT IT IS NOT TO BE USED FOR ANY PURPOSE OR COPIED OR COMMUNICATED TO ANY OTHER PERSON WITHOUT WRITTEN PERMISSION FROM DART AEROSPACE LTD.

reservoirs and drain the hydraulic fluid in a suitable container.

12.17A.8.3 Connect the hose to the suction outlet fitting of the hydraulic system No. 1 and No. 2 reservoirs. Tighten the hose.

12.17A.8.4 Fill the hydraulic system No. 1 and No. 2 reservoirs with hydraulic fluid (C-072) up to the correct level.

NOTE

If the hydraulic cart does not have dual system hoses, do the following on the hydraulic system No. 1 and then repeat the procedure on the hydraulic system No. 2.

12.17A.8.5 Connect the hydraulic cart to the hydraulic test couplings of the hydraulic system No. 1 and No. 2 under the left sliding door of the helicopter.

12.17A.8.6 Disconnect the return hoses from the hydraulic cart and route them into an appropriate container to collect the discarded hydraulic fluid.

12.17A.8.7 Turn electrical power on or apply external power to the helicopter.

NOTE

To avoid wasting fluid, perform all steps below in tight sequence without leaving the system pressurized unnecessarily. If stops are required to prepare the next step, turn the hydraulic cart off.

12.17A.8.9 Turn the hydraulic cart on and apply 1000 PSI (6895 kPa) of pressure with a flow of 3 gal/min (11 L/min) only to the hydraulic system No. 1. The hydraulic system No. 2 must stay unpressurized.

12.17A.8.10Move the collective stick, cyclic stick, and pedals to operate all the flight control actuators through full travel for a minimum of five cycles.

12.17A.8.11Operate the HYDR SYS No. 1 and HYDR SYS No. 2 switches between the On and OFF positions five times in approximately 2-second intervals.

12.17A.8.12Let the hydraulic cart run for 1 minute.

12.17A.8.13Turn the hydraulic cart off.

12.17A.8.14Turn the hydraulic cart on and apply 1000 PSI (6895 kPa) of pressure with a flow of 3 gal/min (11 L/min) only to the hydraulic system No. 2. The hydraulic system No. 1 must stay unpressurized.

12.17A.8.15Move the collective stick, cyclic stick, and the pedals to operate all the flight control actuators through full travel for a minimum of five cycles.

12.17A.8.16Operate the HYDR SYS No. 1 and HYDR SYS No. 2 switches between the On and OFF positions five times in approximately 2-second intervals.

12.17A.8.17Let the hydraulic cart run for 1 minute.

12.17A.8.18Turn the hydraulic cart off.

12.17A.8.19Connect the return hoses to the hydraulic cart.

12.17A.8.20Turn the hydraulic cart on and apply 1000 PSI (6895 kPa) of pressure with a flow of 5 gal/min (19 L/min) to both hydraulic systems.

12.17A.8.21Let the hydraulic cart run for 5 minutes.

12.17A.8.22 Turn the hydraulic cart off.

12.17A.8.23Turn the electrical power off or disconnect external power from the helicopter.

12.17A.8.24If required, add hydraulic fluid (C-072) in the reservoirs of the hydraulic system No. 1 and No. 2 up to the correct level.

12.17A.8.25Replace the four hydraulic filter assemblies (Chapter 29).

12.17A.8.26Disconnect the hydraulic cart from the hydraulic test couplings of the hydraulic system No.

• COPYRIGHT © 2007 BY DART AEROSPACE LTD. •
THIS DOCUMENT IS PRIVATE AND CONFIDENTIAL AND IS SUPPLIED ON THE EXPRESS CONDITION THAT IT IS NOT TO BE USED FOR ANY PURPOSE OR COPIED OR COMMUNICATED TO ANY OTHER PERSON WITHOUT WRITTEN PERMISSION FROM DART AEROSPACE LTD.

1 and No. 2.

12.17A.8.27Install the previously removed doors and panels.

12.17A.9 For the rotor brake do as follows:

12.17A.9.1 Remove the applicable doors and panels to get access to the bleed valves of the rotor brake assembly.

NOTE

There is more than one type of rotor brake assembly. Use the correct instructions.

12.17A.9.2 Bleed each bleed valve of the brake assembly in accordance with the instructions provided in Chapter 63, then service the master cylinder with hydraulic fluid (C-072) (paragraph 12-17).

12.17A.9.3 Repeat step 12.17A.9.2.

12.17A.9.4 Install the previously removed doors and panels.

12.18 BATTERY

The lead acid battery is located in the helicopter nose compartment. Refer to manufactures information manual for servicing and maintenance.

12.19 FIRE EXTINGUISHERS

12.19.1 Engine fire extinguisher bottles

Check gages of engine compartment fire extinguisher bottle through inspection door in side of left hand lower tail pipe cowling. If gage is below the acceptable limit replace with a serviceable unit.
The 2241-009 Fire Bottle must be charged with 6 lbs of Halon for installation on the Eagle Single.

12.19.2 Portable fire extinguishers

Check gages of portable fire extinguishers in cabin (Chapter 26).

12.20 LUBRICATION

The lubrication chart (Figure 12-3) consists of a diagram of the helicopter with detail views. The chart shows all parts requiring periodic lubrication applied by grease gun, oil can, or by hand. This excludes the engine, transmission, combining gearbox, and tail rotor gearboxes, which are lubricated by oil in accordance with servicing instructions.

The lubrication chart uses symbols and abbreviations to indicate the required lubricant, method of application, and time interval for lubrication of each part listed. A key on the chart defines the meanings of symbols and abbreviations.

The intervals specified are the maximum permitted under normal operation. Do not exceed theses intervals. It may be necessary to increase frequency of these intervals if the helicopter operates in extreme environmental conditions.

12.20.1 After each day of operation in rain, snow, or after washing helicopter, all exposed control bearings should be purge-lubricated to remove trapped moisture and ensure a lube film is applied to susceptible surfaces.

12.20.2 Parking helicopters outside in a heavy dew environment requires that all exposed control bearings be purge-lubricated every seven days to ensure that no voids exist that could trap moisture.

12.20.3 If helicopter is stored for periods in excess of 45 days without operation or service, purge-lubricate all bearings.

WARNING

PRIOR TO LUBRICATION, VERIFY THE CONTENT OF GREASE DISPENSING EQUIPMENT. IF THERE IS PARTIAL

• COPYRIGHT © 2007 BY DART AEROSPACE LTD. •
THIS DOCUMENT IS PRIVATE AND CONFIDENTIAL AND IS SUPPLIED ON THE EXPRESS CONDITION THAT IT IS NOT TO BE USED FOR ANY PURPOSE OR COPIED OR COMMUNICATED TO ANY OTHER PERSON WITHOUT WRITTEN PERMISSION FROM DART AEROSPACE LTD.

CHAPTER 12 – SERVICING (12-00-00)

SEPARATION OF THE LUBRICATION OIL FROM THE THICKENING AGENT, OIL MAY BE REMIXED THOROUGHLY WITH THE THICKENING AGENT TO RESTORE THE ORIGINAL LOAD CARRYING CAPABILITIES. IF THERE IS A LOSS OF LUBRICATING OIL FROM THE THICKENING AGENT, DISCARD THE ENTIRE CONTENTS OF THE GREASE DISPENSING EQUIPMENT AND REPLACE WITH A SUITABLE SUPPLY OF APPROVED LUBRICANT (IL GEN-03-93).

CAUTION

DO NOT USE HIGH CAPACITY/HIGH VELOCITY GREASE GUNS ON THE COMPONENTS. THE USE OF HIGH CAPACITY/HIGH VELOCITY GREASE GUNS CAN RESULT IN DAMAGE.

If it becomes necessary to change the brand of grease, remove the old grease by purging until only new grease is present, except as otherwise specified.

NOTE

Prior to and following grease lubrication, visually examine grease fittings for presence of the spring loaded steel ball. If the steel ball is not visible, does not spring back to the closed position, the grease fitting indicates excessive leakage, or it is difficult to inject grease during lubrication, replace the grease fitting (BHT-ALL-SPM, Chapter 8). If the grease fitting is removed due to the spring loaded steel ball not being visible, insert a small steel probe into the back of the grease fitting to confirm the presence of the steel ball. If it is identified that the steel ball is not present in the grease fitting, further investigation is required to ensure that the steel ball has not migrated into the component and caused damage. Discard grease fittings that have been removed.

12.21 LUBRICATION SYMBOLS

DELETED

12.22 LUBRICATION - LUBRICANT RESTRICTIONS (204-040-755-005)

MATERIALS REQUIRED

Refer to BHT-ALL-SPM for specification and source.

NUMBER	NOMENCLATURE
C-015	Lubricant 204-040-755-005 (Tube Pack)

WARNING

LUBRICANT MAY CAUSE EYE AND SKIN IRRITATION. AVOID CONTACT WITH EYES, SKIN AND CLOTHING. WASH THOROUGHLY AFTER HANDLING.

NOTE

Do not exceed lubrication intervals specified on lubrication chart.

CAUTION

LUBRICANT IN ORIGINAL TUBES AND COMPONENTS CONTAINING LUBRICANT 204-040-755-005 (TUBE PACK) (C-015) MUST BE STORED AT MODERATE AMBIENT TEMPERATURES, PERFERABLY LESS THAN 80°F (26.7°C). ELEVATED STORAGE TEMERATURES PROMOTE OIL SEPERATION FROM THE LUBRICANT.

12.22.1 Lubricant 204-040-755-005 (tube pack) (C-015) shelf life is 4 years from packing date on container.

NOTE

Make sure grease is thoroughly mixed prior to use.

12.22.2 In-stock components which utilize 204-040-755-005 lubricant must be pulled from stock and re-lubricated upon expiration of the original 4-year shelf life of the lubricant.

12.22.3 Once a component lubricated with 204-

• COPYRIGHT © 2007 BY DART AEROSPACE LTD. •
THIS DOCUMENT IS PRIVATE AND CONFIDENTIAL AND IS SUPPLIED ON THE EXPRESS CONDITION THAT IT IS NOT TO BE USED FOR ANY PURPOSE OR COPIED OR COMMUNICATED TO ANY OTHER PERSON WITHOUT WRITTEN PERMISSION FROM DART AEROSPACE LTD.

040-755-005 lubricant goes into service, the re-lubrication interval is dictated by the calendar and service-time schedule whether the component is installed on a helicopter or is subsequently removed and returned to stock as a spare on the shelf.

12.22.4 Lubricant in original tubes and components containing 204-040-755-005 lubricant should be stored at moderate ambient temperatures, preferably less than 80°F (26.7°C). Elevated storage temperatures promote oil separation from the lubricant.

12.22.5 Ensure grease is thoroughly mixed prior to use.

12.23 FLEXIBLE COUPLING LUBRICATION LOG

MATERIALS REQUIRED

Refer to BHT-ALL-SPM for specification and source.

NUMBER	NOMENCLATURE
C-015	Lubricant 204-040-755-005 (Tube pack)

A flex coupling lubrication log similar to one shown on table 12-2 shall be maintained any time a component using lubricant (tube pack) (C-015) is installed on the helicopter. This log shall list date lubricant was applied in component. This lubricant carries an operational hour and a calendar requirement specified in this chapter. Lubricant shall be replaced at requirement occurring first (hours/ months).

• COPYRIGHT © 2007 BY DART AEROSPACE LTD. •
THIS DOCUMENT IS PRIVATE AND CONFIDENTIAL AND IS SUPPLIED ON THE EXPRESS CONDITION THAT IT IS NOT TO BE USED FOR ANY PURPOSE OR COPIED OR COMMUNICATED TO ANY OTHER PERSON WITHOUT WRITTEN PERMISSION FROM DART AEROSPACE LTD.

Table 12-2. Flex couplings lubrication log (EXAMPLE ONLY)

Part Number	Nomenclature	Date Lubricated	Airframe Hours	Date Lubricated	Airframe Hours
	Transmission Tail Rotor Drive Output Coupling				
	Tail Rotor Driveshaft Hanger (8)				
	Intermediate Gearbox Input Quill				
	Intermediate Gearbox Output Quill				
	Tail Rotor Gearbox Input Quill				

• COPYRIGHT © 2007 BY DART AEROSPACE LTD. •
THIS DOCUMENT IS PRIVATE AND CONFIDENTIAL AND IS SUPPLIED ON THE EXPRESS CONDITION THAT IT IS NOT TO BE USED FOR ANY PURPOSE OR COPIED OR COMMUNICATED TO ANY OTHER PERSON WITHOUT WRITTEN PERMISSION FROM DART AEROSPACE LTD.

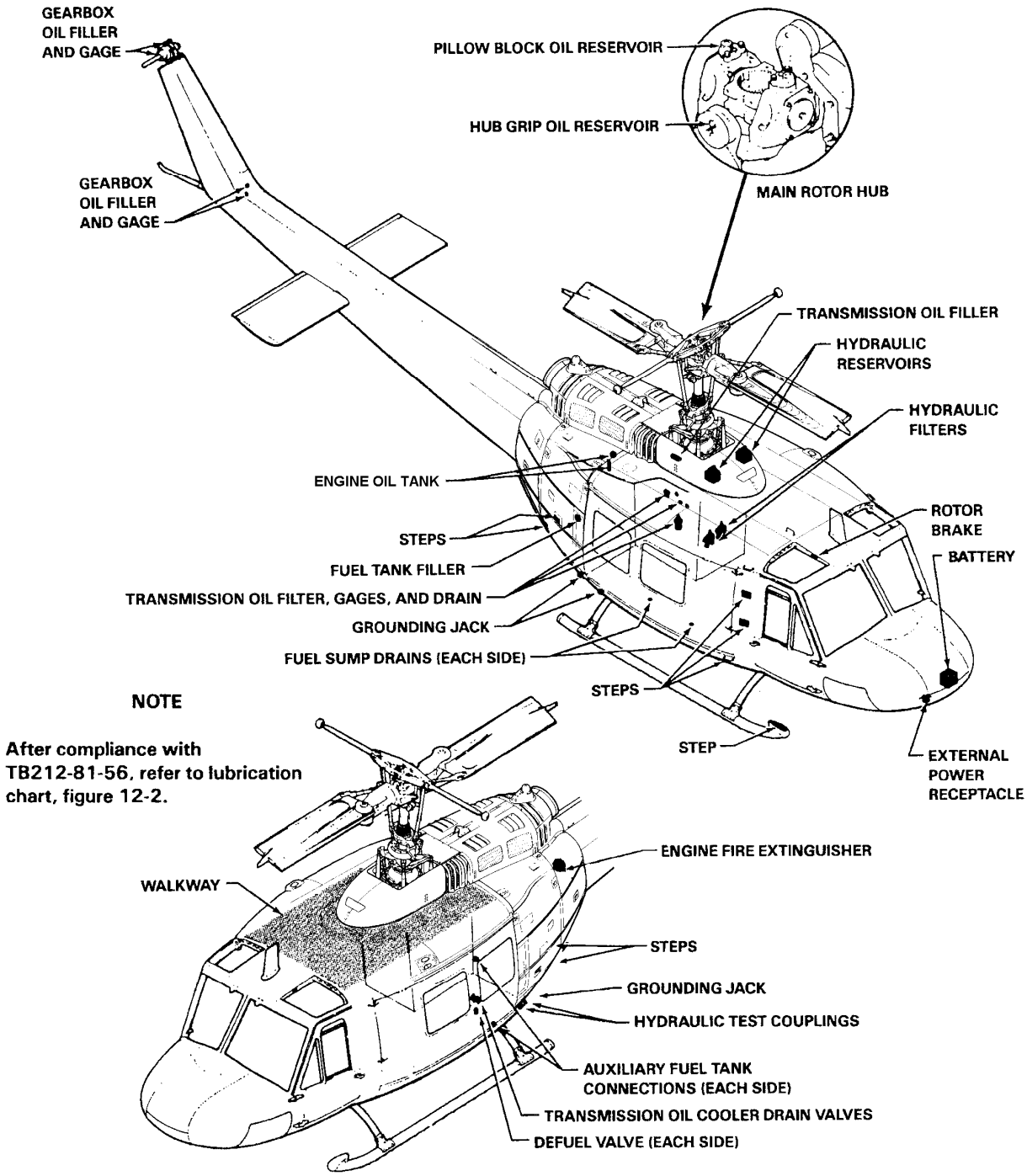

Figure 12-1. Servicing Points

• COPYRIGHT © 2007 BY DART AEROSPACE LTD. •
THIS DOCUMENT IS PRIVATE AND CONFIDENTIAL AND IS SUPPLIED ON THE EXPRESS CONDITION THAT IT IS NOT TO BE USED FOR ANY PURPOSE OR COPIED OR COMMUNICATED TO ANY OTHER PERSON WITHOUT WRITTEN PERMISSION FROM DART AEROSPACE LTD.

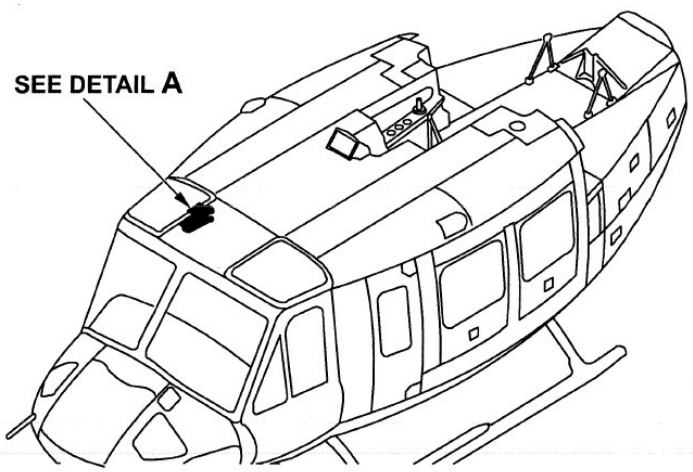

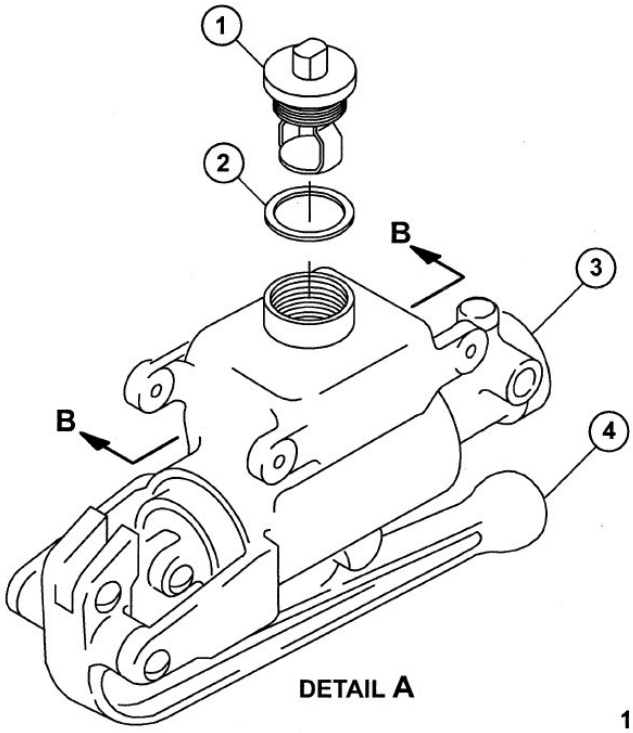

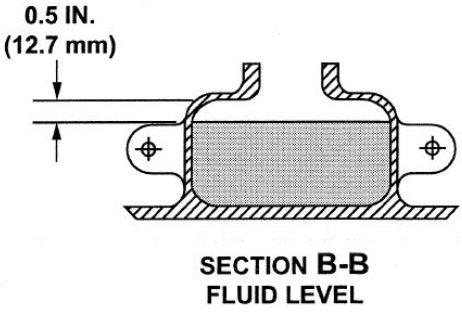

1. Reservoir filler cap
2. Packing
3. Rotor brake master cylinder
4. Rotor brake handle

Figure 12-2. Rotor Brake Servicing

• COPYRIGHT © 2007 BY DART AEROSPACE LTD. •
THIS DOCUMENT IS PRIVATE AND CONFIDENTIAL AND IS SUPPLIED ON THE EXPRESS CONDITION THAT IT IS NOT TO BE USED FOR ANY PURPOSE OR COPIED OR COMMUNICATED TO ANY OTHER PERSON WITHOUT WRITTEN PERMISSION FROM DART AEROSPACE LTD.

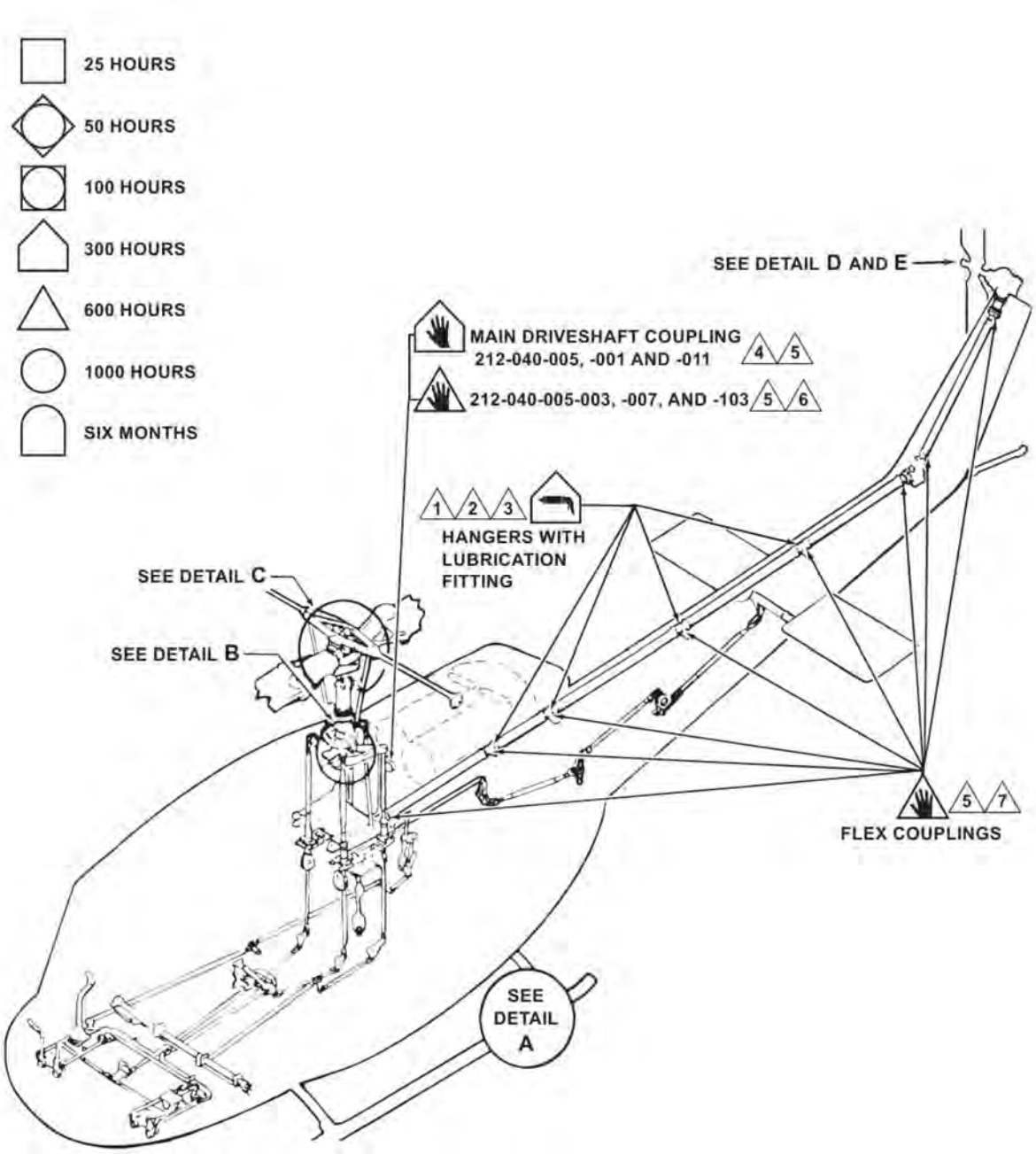

Figure 12-3. Lubrication Chart (Sheet 1 of 4)

• COPYRIGHT © 2007 BY DART AEROSPACE LTD. •
THIS DOCUMENT IS PRIVATE AND CONFIDENTIAL AND IS SUPPLIED ON THE EXPRESS CONDITION THAT IT IS NOT TO BE USED FOR ANY PURPOSE OR COPIED OR COMMUNICATED TO ANY OTHER PERSON WITHOUT WRITTEN PERMISSION FROM DART AEROSPACE LTD.

1. Axle pivot point
2. Actuating cylinder trunnion
3. Wheel bearing
4. Pin assembly
5. Securing pin
6. Collective sleeve bearing
7. Scissor bearing
8. Swashplate bearing
9. Collective lever trunnion
10. Outer control plate trunnion
11. Control plate trunnion
12. Scissors pivot cover plate
13. Collective sleeve spline
14. Scissors pivot needle bearing (P/N 212-010-407 scissors)
15. Crosshead bearing
16. Antitorque control lever
17. Pitch change link universal
18. Stabilizer centerframe bearing
19. Mixing lever bearing
20. Trunnion bearing
21. Main rotor grip
22. Main rotor trunnion

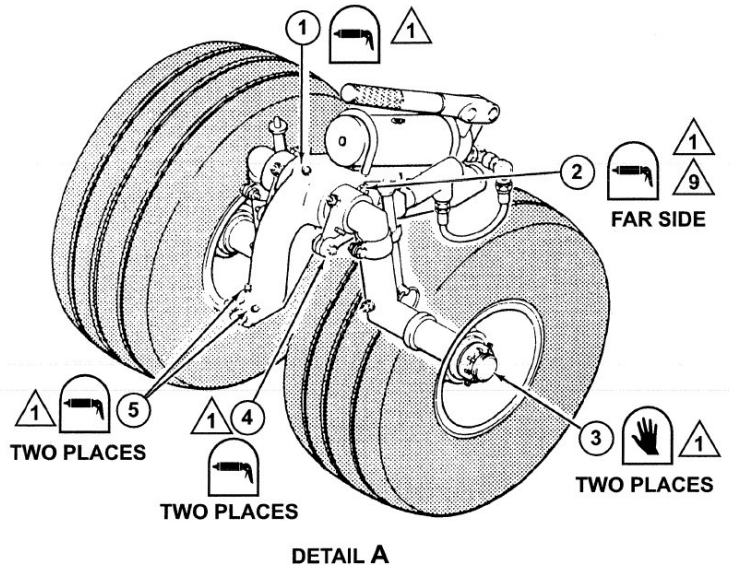

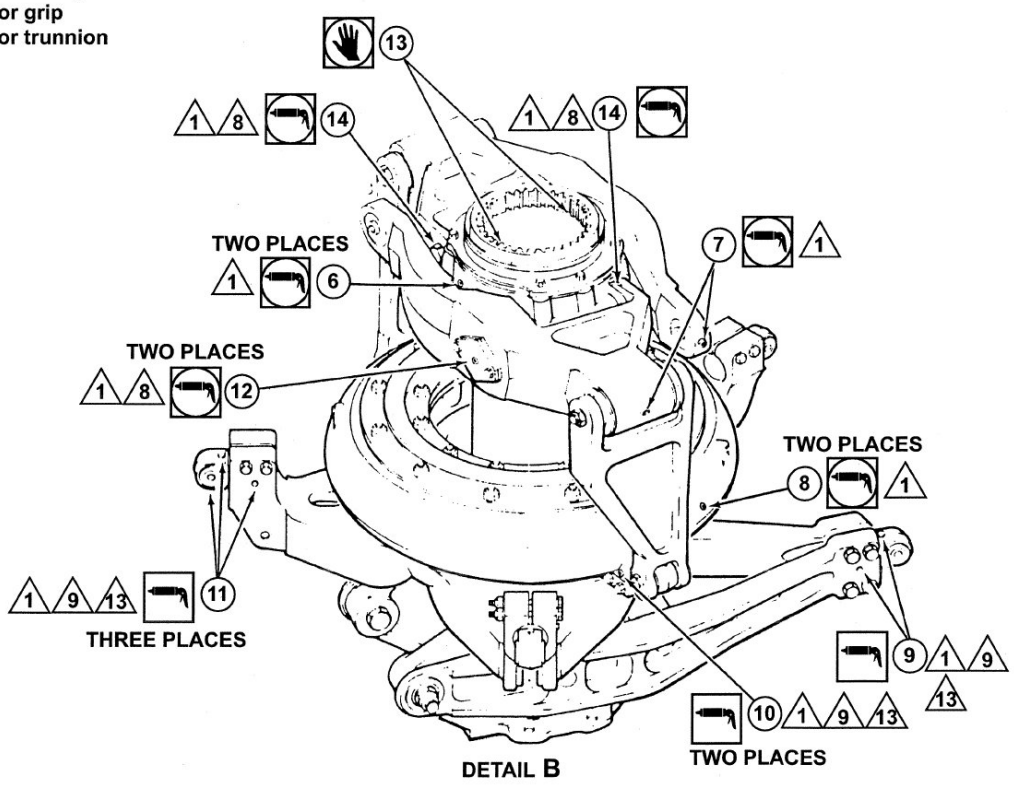

Figure 12-3. Lubrication Chart (Sheet 2 of 4)

• COPYRIGHT © 2007 BY DART AEROSPACE LTD. •
THIS DOCUMENT IS PRIVATE AND CONFIDENTIAL AND IS SUPPLIED ON THE EXPRESS CONDITION THAT IT IS NOT TO BE USED FOR ANY PURPOSE OR COPIED OR COMMUNICATED TO ANY OTHER PERSON WITHOUT WRITTEN PERMISSION FROM DART AEROSPACE LTD.

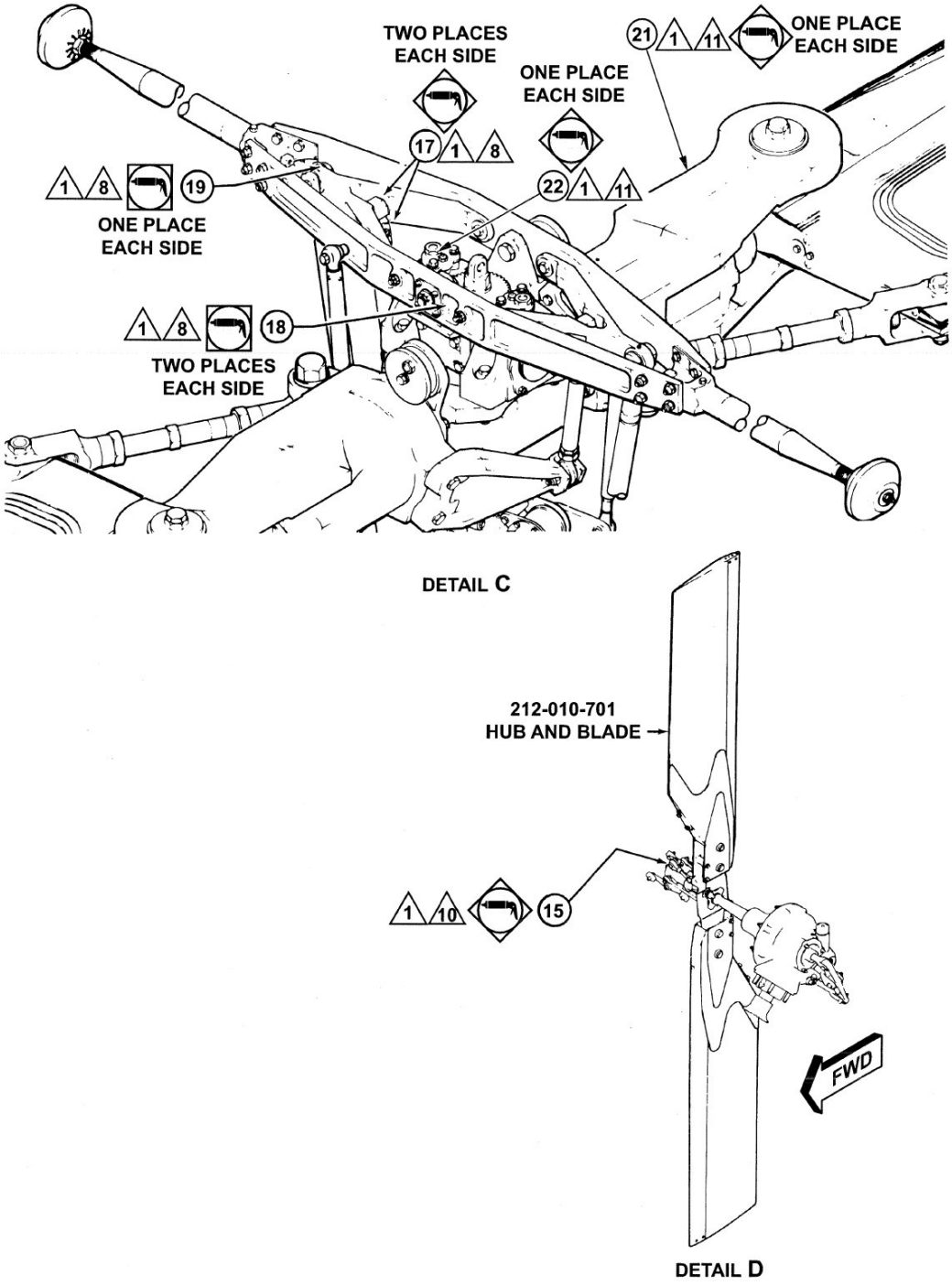

Figure 12-3. Lubrication Chart (Sheet 3 of 4)

• COPYRIGHT © 2007 BY DART AEROSPACE LTD. •
THIS DOCUMENT IS PRIVATE AND CONFIDENTIAL AND IS SUPPLIED ON THE EXPRESS CONDITION THAT IT IS NOT TO BE USED FOR ANY PURPOSE OR COPIED OR COMMUNICATED TO ANY OTHER PERSON WITHOUT WRITTEN PERMISSION FROM DART AEROSPACE LTD.

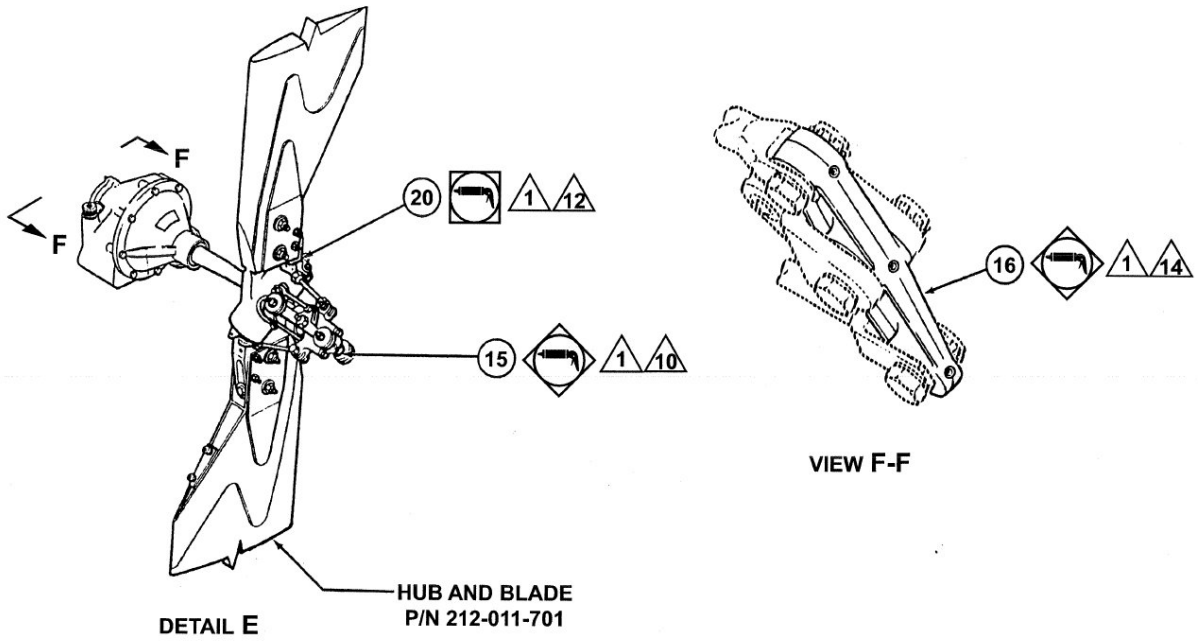

NOTES

1. Use MIL-PRF-81322 grease (C-001),
2. Lubricate hanger bearing by slowly pumping grease into fitting until grease may be seen around bearing seal. Use caution because excessive pump pressure may push seal from bearing.
3. Lubricate tail rotor hanger bearing with Mobil 28 conforming to MIL-PRF-81322 grease (C-001).
4. Lubricate couplings on P/N 212-040-005-011 main driveshaft every 300 hours or 3 months: whichever occurs first.
5. Use grease (C-015), P/N 204-040-755-005. Grease (C-015) has a shelf storage life of 4 years whether stored in original container or in a component. If a component is not put in service prior to expiration of the 4 year shelf life of the grease, component shall be relubricated prior to installation on a helicopter. After initial operation of component on the helicopter, refer to lubrication chart for lubrication intervals.
6. Lubricate couplings on P/N 212-040-005-003, -007, and -103 main driveshaft every 600 hours or 12 months; whichever occurs first.
7. Lubricate tail rotor driveshaft couplings every 600 hours or six months; whichever occurs first.
8. Lubricate more frequently if conditions warrant.
9. Purge lubricate.
10. Do not overlubricate crosshead bearing. Two shots of grease each 50 hours of operation is considered adequate.
11. If T.B. 212-81-56 has been complied with, purge lubricate main rotor grips and trunnions with MIL-PRF-81322 grease (C-001) each 50 hours of operation. Refer to T.B. 212-81-56 for lubrication instructions.
12. Lubricate until grease passes seal.
13. Every 4th 25 (100 hours) rotate bearing 180° and purge lubricate (Chapter 5).
14. Lubricate lever assembly P/N 209-011-712-101 every 50 hours of operation.

Figure 12-3. Lubrication Chart (Sheet 4 of 4)

• COPYRIGHT © 2007 BY DART AEROSPACE LTD. •
THIS DOCUMENT IS PRIVATE AND CONFIDENTIAL AND IS SUPPLIED ON THE EXPRESS CONDITION THAT IT IS NOT TO BE USED FOR ANY PURPOSE OR COPIED OR COMMUNICATED TO ANY OTHER PERSON WITHOUT WRITTEN PERMISSION FROM DART AEROSPACE LTD.

CHAPTER 18
VIBRATION AND NOISE ANALYSIS (18-00-00)

REFER TO BHT-212-MM

• COPYRIGHT © 2007 BY DART AEROSPACE LTD. •
THIS DOCUMENT IS PRIVATE AND CONFIDENTIAL AND IS SUPPLIED ON THE EXPRESS CONDITION THAT IT IS NOT TO BE USED FOR ANY PURPOSE OR COPIED OR COMMUNICATED TO ANY OTHER PERSON WITHOUT WRITTEN PERMISSION FROM DART AEROSPACE LTD.

CHAPTER 21
AIR DISTRIBUTION (VENTILATION) (21-00-00)

• COPYRIGHT © 2007 BY DART AEROSPACE LTD. •
THIS DOCUMENT IS PRIVATE AND CONFIDENTIAL AND IS SUPPLIED ON THE EXPRESS CONDITION THAT IT IS NOT TO BE USED FOR ANY PURPOSE OR COPIED OR COMMUNICATED TO ANY OTHER PERSON WITHOUT WRITTEN PERMISSION FROM DART AEROSPACE LTD.

TABLE OF CONTENTS

Table of Contents 2
Consumable Material List 3
21.1 Air Distribution (Ventalation) 4
21.2 Troubleshooting 5
21.3 Bleed Air Heating System Components 7
21.4 Bleed Air Switch 7
21.7 Variable Control Mixing Valve 7
21.7.1 Removal 7
21.7.2 Installation 10
21.8 Remote Sensor 10
21.8.1 Removal 10
21.8.2 Installation 10
21.9 Selector 10
21.9.1 Removal 10
21.9.2 Installation and rigging 10
21.10 Outlet Control Valve 11
21.10.1 Removal 11
21.10.2 Installation 11
21.11 Heat/Vent Air Ducts 11
21.11.1 Removal 11
21.11.2 Repair 11
21.11.3 Installation 12
21.12 Ventilation/Defog System 14
21.13 Ventilation Blower 14
21.13.1 Removal 14
21.13.2 Installation 14

FIGURES

Figure 21-1. Air distribution system schematic (typical) 6
Figure 21-2. Bleed air heating system (S/N 30504 through 30553) 8
Figure 21-3. Bleed air heating system (S/N 30554 and sub.) 9
Figure 21-4. Outlet control valve 13

TABLES

Table 21-1. Troubleshooting 5

• COPYRIGHT © 2007 BY DART AEROSPACE LTD. •
THIS DOCUMENT IS PRIVATE AND CONFIDENTIAL AND IS SUPPLIED ON THE EXPRESS CONDITION THAT IT IS NOT TO BE USED FOR ANY PURPOSE OR COPIED OR COMMUNICATED TO ANY OTHER PERSON WITHOUT WRITTEN PERMISSION FROM DART AEROSPACE LTD.

CONSUMABLE MATERIAL LIST

The following consumable materials are required to perform the maintenance procedures within this chapter.

ITEM No.	NOMENCLATURE	GAGE/FSCM/ SOURCE
C-300	Adhesive, 299-947-152, Type I, Class I (Dapcotac 3300)	97499
C-306	Toluene, TT-T-548	Commercial
C-314	Ahesive, 299-947-152, Type III or RTV 20-046 or 94-002	97499 01139
C-347	Xylene TT-X-916, Grade A	Commercial
C-403	Glass Cloth, Scotchbrand 361, Flame Resistant	76381
C-404	Glass Cloth, 0.010 inch thick, MIL-C-9064	Commercial
C-405	Lockwire, MS20995C32 (0.032 inch Dia.)	Commercial
C-439	Aluminum Foil Tape, No. 425	26066

• COPYRIGHT © 2007 BY DART AEROSPACE LTD. •
THIS DOCUMENT IS PRIVATE AND CONFIDENTIAL AND IS SUPPLIED ON THE EXPRESS CONDITION THAT IT IS NOT TO BE USED FOR ANY PURPOSE OR COPIED OR COMMUNICATED TO ANY OTHER PERSON WITHOUT WRITTEN PERMISSION FROM DART AEROSPACE LTD.

CHAPTER 21 – AIR DISTRIBUTION (VENTILATION) (21-00-00)

21.1 AIR DISTRIBUTION (VENTALATION)

The cabin air distribution system includes two subsystems which provide optional use of heated or ventilation air from separate sources directed through the same ducting. Functional separation of the systems is obtained by flow actuated Y-valves located under the windshield defrost-defog nozzles. Refer to Figure 21-1 for air distribution system schematic.

Heated air for cabin heating and defrosting windshields is provided by bleed air from power section compressor. The system pumps air through ducting to outlets at both door posts, either side of center pedestal, each side of instrument panel, lower forward window nozzles, and left and right windshield defrosting nozzles. Heating is controlled by switches on overhead console, a temperature selecting dial on right side door post, and heater defrost control lever on right side of center pedestal.

Ventilating-defogging system uses ram air as source from intake grilles on cabin nose, with optional use of blowers for windshield nozzle and outlets ahead of crew stations. Air intake is controlled by actuating a cable knob. Blowers are controlled by an overhead panel switch.

The temperature selecting dial, through an electrical positioning motor, controls a remote sensor which is mounted on plenum chamber in the compartment on right side below engine deck. This sensor, using a bi-metallic element, senses temperature in heater duct and controls the mixing valve through a small tube which operates a bleed port valve.

When heater-defrost lever, on front right pedestal, is moved forward to ON, a valve in base of pedestal is closed by linkage to shut off heated air flow to the four valves in pedestal base. Simultaneously, lever linkage activates a micro-switch in base and closes two valves on single shaft in air distribution outlet control valve and shuts off heated air flow to passenger compartment valves. When lever is moved aft to OFF, the reverse actions occur to open the valves

Engine compressor air flow noise is muffled by a noise suppressor in rear of fuselage forward of the mixing valve. Heated air exits from the noise suppressor into a plenum chamber aft of the cabin area. A temperature limit switch in aft cabin prevents overheating. If temperature in plenum exceeds 220°F (104.4°C), the limit switch activates MASTER CAUTION light and HEATER AIR LINE segment in caution panel. Cycling continues until heater is turned off or problem is corrected.

• COPYRIGHT © 2007 BY DART AEROSPACE LTD. •
THIS DOCUMENT IS PRIVATE AND CONFIDENTIAL AND IS SUPPLIED ON THE EXPRESS CONDITION THAT IT IS NOT TO BE USED FOR ANY PURPOSE OR COPIED OR COMMUNICATED TO ANY OTHER PERSON WITHOUT WRITTEN PERMISSION FROM DART AEROSPACE LTD.

CHAPTER 21 – AIR DISTRIBUTION (VENTILATION) (21-00-00)

21.2 TROUBLESHOOTING

Troubleshoot bleed air heating system in accordance with table 21-1.

Table 21-1. Troubleshooting

Indication of trouble	Probable cause	Corrective action
No bleed air flow to variable mixture valve	Restricted or no flow	Clear lines — check for ice in lines.
No bleed air flow through mixing valve.	No voltage to mixing valve. Inadequate air pressure. Inoperative mixing valve.	Refer to Chapter 96. Repair leakage in line from mixing valve to sensor. If bleed air and voltage exists, replace mixing valve.
Temperature of heated ventilation air will not modulate.	Faulty selector dial cable assembly. Faulty temperature sensor.	Replace cable assembly. Replace sensor unit.
Ventilation air all hot.	Plugged sensor line from mixing valve to sensor. Faulty temperature sensor.	Clear line. Replace sensor unit.
Ventilation air all cool.	Faulty temperature selector dial cable. Faulty temperature sensor.	Replace cable assembly. Replace sensor unit. Check for leaking sensor line and repair.
No air out of door post outlets.	No voltage to door post outlet valve. Inoperative limit switch on console.	Repair wiring (Chapter 96). Refer to Chapter 96.
Unable to shut off air to door post outlets	No voltage to door post outlet valve.	Refer to Chapter 96.
HEATER AIR LINES caution segment illuminates HEATER switch ON or OFF.	Defective overheat switch or wiring.	Replace switch or repair wiring (Chapter 96).
HEATER AIR LINES caution segment illuminates when HEATER switch is ON. Heater system operating normally.	Defective overheat switch or wiring.	Replace switch or repair wiring (Chapter 96).

• COPYRIGHT © 2007 BY DART AEROSPACE LTD. •
THIS DOCUMENT IS PRIVATE AND CONFIDENTIAL AND IS SUPPLIED ON THE EXPRESS CONDITION THAT IT IS NOT TO BE USED FOR ANY PURPOSE OR COPIED OR COMMUNICATED TO ANY OTHER PERSON WITHOUT WRITTEN PERMISSION FROM DART AEROSPACE LTD.

CHAPTER 21 – AIR DISTRIBUTION (VENTILATION) (21-00-00)

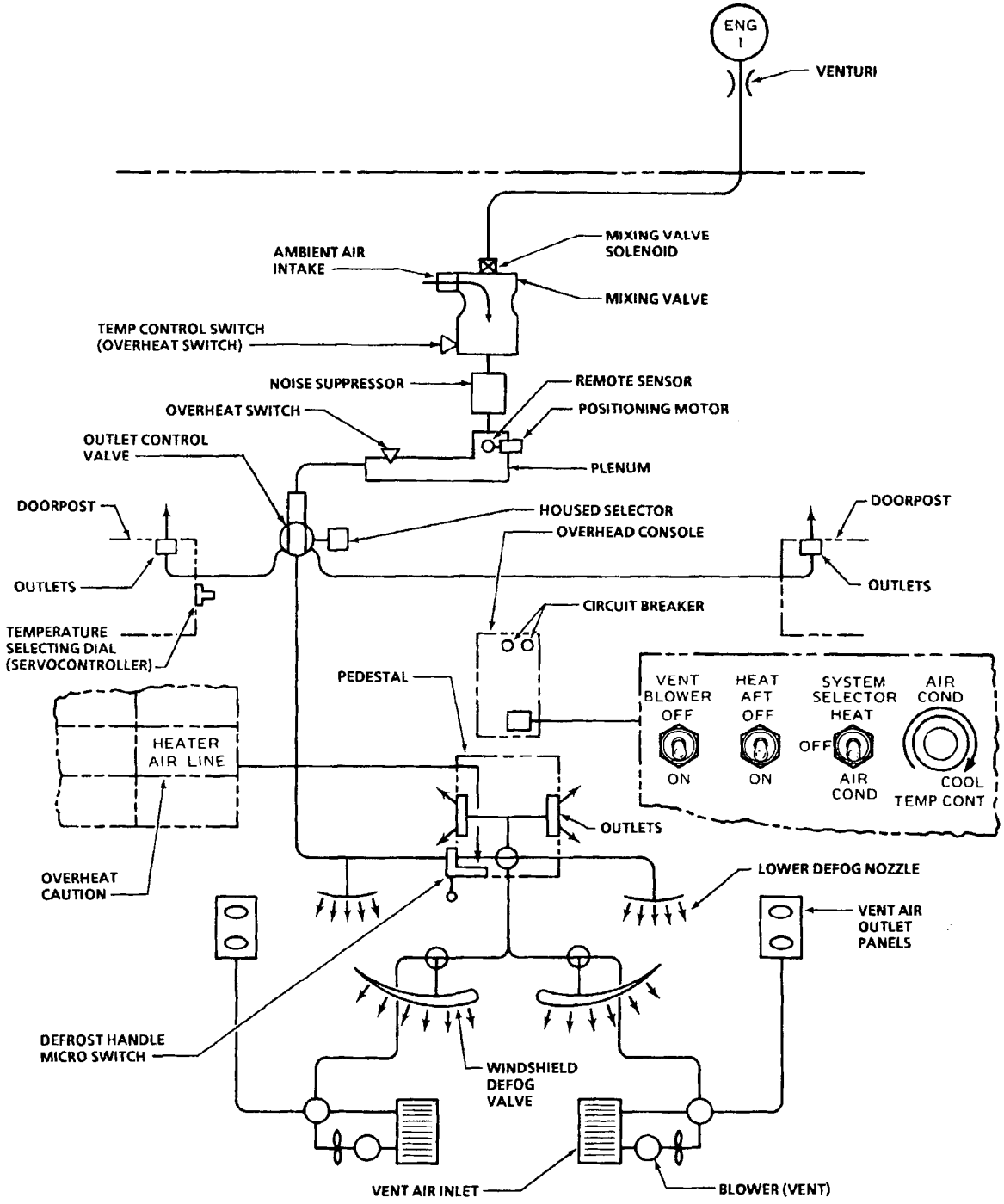

Figure 21-1. Air distribution system schematic (typical)

• COPYRIGHT © 2007 BY DART AEROSPACE LTD. •
THIS DOCUMENT IS PRIVATE AND CONFIDENTIAL AND IS SUPPLIED ON THE EXPRESS CONDITION THAT IT IS NOT TO BE USED FOR ANY PURPOSE OR COPIED OR COMMUNICATED TO ANY OTHER PERSON WITHOUT WRITTEN PERMISSION FROM DART AEROSPACE LTD.

21.3 BLEED AIR HEATING SYSTEM COMPONENTS

The following paragraphs provide maintenance information for various miscellaneous components. These procedures are typical for all serial number helicopters. Minor differences may exist due to helicopter configuration and various kits which may be installed.

21.4 BLEED AIR SWITCH

The bleed air switch is located adjacent to the copilot's collective lever jackshaft. It serves to stop bleed air flow from the engine to the heater system when maximum engine power may be required for flight. The switch is activated when the collective is raised approximately 12.5 to 13.5 degrees from the full down position. When the switch is activated, an overheat condition is simulated electrically and bleed air is shut off at the variable control mixing valve. When the collective pitch lever is lowered, normal bleed air heating is resumed. (Refer to Chapter 96.12.10, Rigging - Bleed Air Priority Switch, for bleed air switch rigging procedures.)

Note: refer to Chapter 95, for information regarding BLEED AIR OFF lights.

21.5 VARIABLE CONTROL MIXING VALVE

The mixing valve (5, Figure 21-2 and 21-3) is installed on the right side below the engine deck. This valve controls bleed air and ambient air flow as directed by the remote sensor (18). A bleed air nozzle inside the mixing valve acts as a jet pump through a venturi to draw in ambient air and control the mixed air flow. When heated air is not at the selected temperature, the remote sensor causes the variable control mixing valve to increase or decrease engine bleed air flow and to regulate ambient air flow as required to correct the temperature variation. A temperature limit switch (6) is located on the mixing valve to protect the structure from damage if a distribution system duct ruptures. This switch is set at 220°F (104°C). II this temperature is exceeded, the CABIN HTR circuit breaker will open.

21.5.1 Removal

21.5.1.1 Open access door at rear of fuselage under engine compartment to gain access to heater compartment.

21.5.1.2 Remove two sensing lines, on-off valve wiring and overheat temperature switch (6, Figure 21-2 or Figure 21-3) wiring.

21.5.1.3 Disconnect tube, remove clamp, large B nut and attaching hardware and remove valve (5).

• COPYRIGHT © 2007 BY DART AEROSPACE LTD. •
THIS DOCUMENT IS PRIVATE AND CONFIDENTIAL AND IS SUPPLIED ON THE EXPRESS CONDITION THAT IT IS NOT TO BE USED FOR ANY PURPOSE OR COPIED OR COMMUNICATED TO ANY OTHER PERSON WITHOUT WRITTEN PERMISSION FROM DART AEROSPACE LTD.

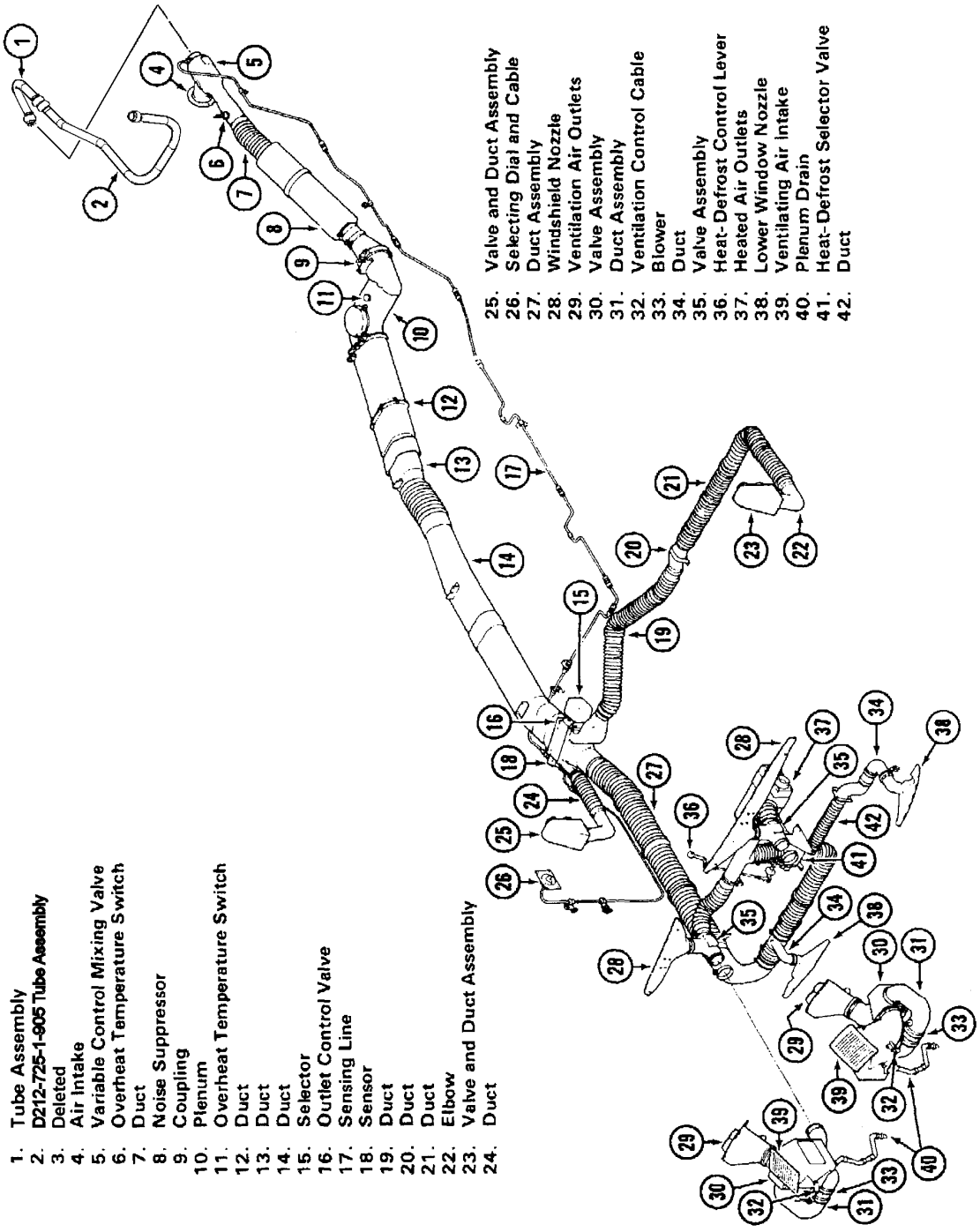

Figure 21-2. Bleed air heating system (S/N 30504 through 30553)

• COPYRIGHT © 2007 BY DART AEROSPACE LTD. •
THIS DOCUMENT IS PRIVATE AND CONFIDENTIAL AND IS SUPPLIED ON THE EXPRESS CONDITION THAT IT IS NOT TO BE USED FOR ANY PURPOSE OR COPIED OR COMMUNICATED TO ANY OTHER PERSON WITHOUT WRITTEN PERMISSION FROM DART AEROSPACE LTD.

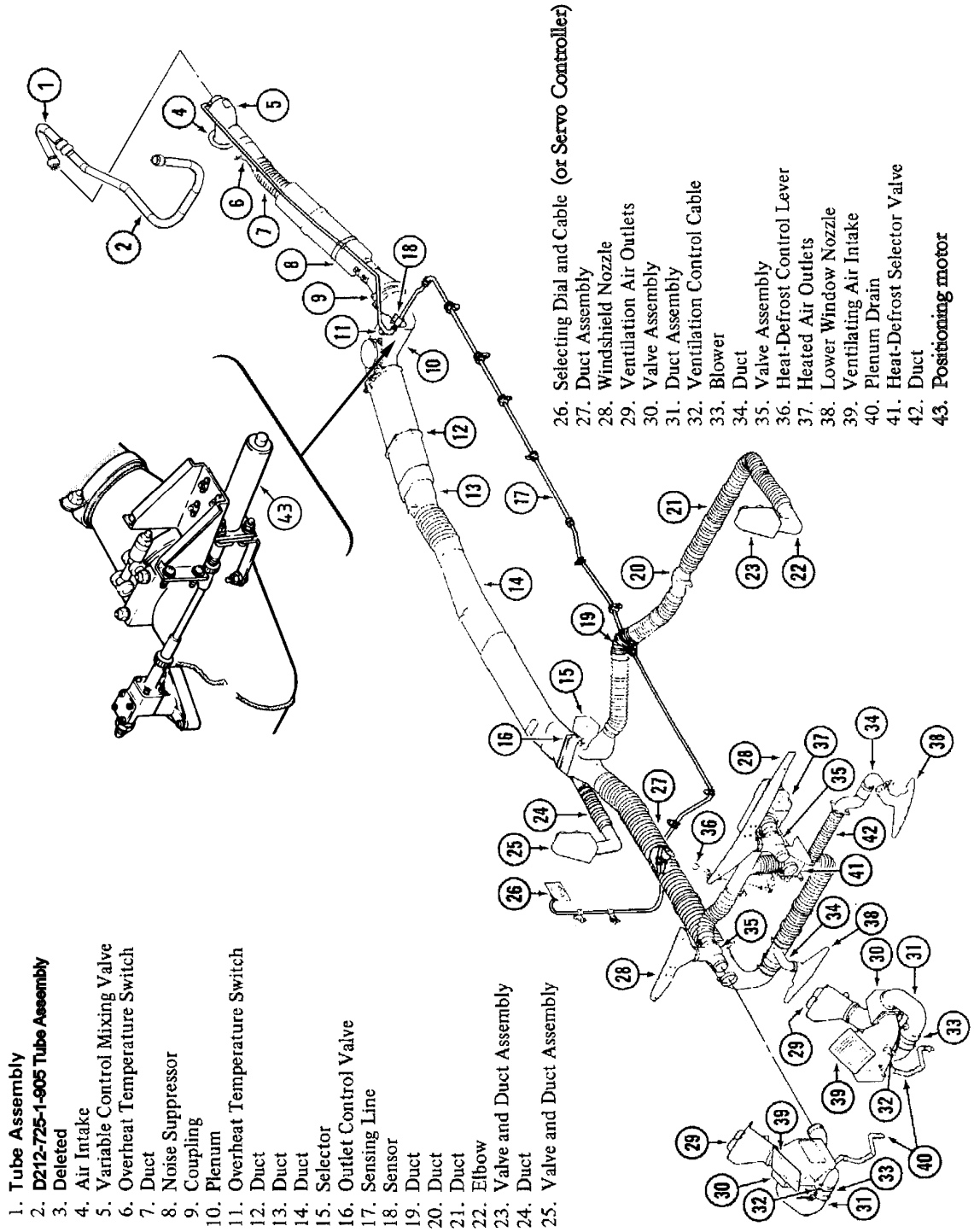

Figure 21-3. Bleed air heating system (S/N 30554 and sub.)

• COPYRIGHT © 2007 BY DART AEROSPACE LTD. •
THIS DOCUMENT IS PRIVATE AND CONFIDENTIAL AND IS SUPPLIED ON THE EXPRESS CONDITION THAT IT IS NOT TO BE USED FOR ANY PURPOSE OR COPIED OR COMMUNICATED TO ANY OTHER PERSON WITHOUT WRITTEN PERMISSION FROM DART AEROSPACE LTD.

21.5.2 Installation

21.5.2.1 Position valve (5, Figure 21-2 or Figure 21-3) in heater system and secure in place with clamp and large B nut. Torque nut 40 to 58 lbs. (54.23 to 78.63 Nm).

21.5.2.2 Connect two sensing lines, tube, overheat temperature switch wiring and on-off wiring.

21.6 REMOTE SENSOR

The remote sensor (18, Figure 21-2 or 21-3) is installed on top of plenum chamber. The sensor controls the mixing valve through a bleed aft port.

21.6.1 Removal

21.6.1.1 Remove access plate on side of fuselage below cabin door edge.

21.6.1.2 Disconnect sensing line (17, Figure 21-2 or Figure 21-3) and selecting dial cable (26) from sensor (18).

21.6.1.3 Remove screws attaching sensor to outlet control valve (16). Remove sensor.

21.6.2 Installation

MATERIALS REQUIRED

NUMBER	NOMENCLATURE
C-405	Lockwire

21.6.2.1 Position sensor in place on side of control valve and secure with attaching screw. Secure screws with lockwire (C-4O5).

21.6.2.2 Connect pressure sensing line and selecting dial cable.

21.6.2.3 Phase controller sensor and motor (Chapter 96).

21.7 SELECTOR

21.7.1 Removal

21.7.1.1 Remove access plate on underside of fuselage to right of center line and under the outlet control valve (16, Figure 21-2 or Figure 21-3).

21.7.1.2 Disconnect electrical cable and remove four mount screws on selector (15).

21.7.1.3 Remove selector and small shaft adapter.

21.7.2 Installation and rigging

NOTE

This rigging procedure is to be used when replacing selector (15, Figure 21-2) or outlet control valve.

21.7.2.1 Set AFT outlet switch located on the overhead panel to ON.

21.7.2.2 Connect selector (4, Figure 21-4) to wire harness and allow selector to rotate to open position.

21.7.2.3 Remove sensor (16, Figure 21-2), or cover (3, Figure 21-4), as applicable.

NOTE

The position of flapper (1, Figure 21-4) may be checked by looking through opening under cover (3) with a inspection mirror.

21.7.2.4 Rotate flapper (1) to horizontal (open) position.

21.7.2.5 Install adapter (5) on shaft (2), position as shown on view B-B, and install selector (4) on outlet control valve.

21.7.2.6 Turn AFT outlet switch to OFF and observe shaft (2) rotates to closed position.

21.7.2.7 Turn AFT outlet switch to ON and check flapper (1) returns to horizontal (open) position.

• COPYRIGHT © 2007 BY DART AEROSPACE LTD. •
THIS DOCUMENT IS PRIVATE AND CONFIDENTIAL AND IS SUPPLIED ON THE EXPRESS CONDITION THAT IT IS NOT TO BE USED FOR ANY PURPOSE OR COPIED OR COMMUNICATED TO ANY OTHER PERSON WITHOUT WRITTEN PERMISSION FROM DART AEROSPACE LTD.

21.7.2.8 Install four mount screws securing selector to control valve.

21.7.2.9 Perform operational check to ensure proper operation of cabin heater valve.

21.8 OUTLET CONTROL VALVE

21.8.1 Removal

21.8.1.1 Remove cabin deck plate adjacent to right doorpost.

21.8.1.2 Remove selector (15, Figure 21-2 or Figure 21-3), sensor (18), and connecting ducts from valve.

21.8.1.3 Remove valve mounting hardware and remove valve.

21.8.2 Installation

21.8.2.1 Position valve on mounting brackets in airframe and secure in place with attaching hardware.

21.8.2.2 Install selector and sensor. Connect ducts to valve.

21.8.2.3 Check for proper operation and install deck plate.

21.9 HEAT/VENT AIR DUCTS

The air ducts carry and selected temperature air to areas within cabin as directed by crew. The flexible air ducts are made from silicone impregnated fiberglass cloth. The rigid ducts are made from polycarbonate material. These are secured in airframe by clamps, brackets, and couplings.

21.9.1 Removal

21.9.1.1 Remove applicable deck plates and access doors to provide access to component to be removed.

21.9.1.2 Remove necessary clamps, couplings, and/or tape wrapping securing component to airframe and connecting parts.

21.9.1.3 Remove component through access opening.

21.9.1.4 Cover opening to prevent entry of foreign material.

21.9.2 Repair

MATERIALS REQUIRED

NUMBER	NOMENCLATURE
C-300	Adhesive
C-403	Glass cloth
C-439	Tape

21.9.2.1 Repair damage which does not penetrate flexible air ducts as follows:

21.9.2.1.1 Repair scuffs arid abrasions which do not penetrate through cloth and are not more than 3.0 in. (76.2 mm) long by 1.5 in. (38.1 mm) wide. A maximum of two repairs per 12.0 in. (20.5 cm), covering up to 10% of surface area are acceptable.

21.9.2.1.2 Clean damaged area using toluene (C-306) or xylene (C-347). Allow area to air dry for at least 30 minutes.

21.9.2.1.3 Apply brush coat of adhesive (C-314) over damaged area with a minimum of 0.50 in. (12.7 mm) overlap beyond damage.

21.9.2.1.4 Smooth adhesive and cure by air drying for a minimum of two hours at room temperature or until dry to the touch.

21.9.2.2 Repair damage which penetrates duct as follows:

NOTE

Repairs covering up to 10% of the surface area of the duct are acceptable.

• COPYRIGHT © 2007 BY DART AEROSPACE LTD. •
THIS DOCUMENT IS PRIVATE AND CONFIDENTIAL AND IS SUPPLIED ON THE EXPRESS CONDITION THAT IT IS NOT TO BE USED FOR ANY PURPOSE OR COPIED OR COMMUNICATED TO ANY OTHER PERSON WITHOUT WRITTEN PERMISSION FROM DART AEROSPACE LTD.

21.9.2.2.1 Clean circumference of duct damaged area with toluene (C-306) or xylene (C-347). Allow area to air dry for at least 30 minutes.

21.9.2.2.2 Cut one piece of glass cloth (C-404) to cover duct circumference with at least 1.0 in. (25.4 mm) overlap of damaged area.

21.9.2.2.3 Apply one thin smooth brush coat of adhesive (C-314) around duct circumference in area to be covered by cloth.

21.9.2.2.4 Wrap cloth around duct and smooth out. Allow area to air dry at least two hours or until dry to the touch before using or handling the duct.

21.9.3 Installation

MATERIALS REQUIRED

NUMBER	NOMENCLATURE
C-306	Toluene
C-314	Adhesive
C-347	Xylerte
C-404	Glass Cloth

21.9.3.1 Position component in place within the system.

21.9.3.2 Install applicable clamps and couplings.

21.9.3.3 At connecting ends of ducts (13 and 14, Figure 21-2) apply adhesive (C-300) to soft ends and apply three complete wraps of glass cloth (C-403), two inches wide. Do not stretch last wrap.

21.9.3.4 Wrap insulation on duct (12) with two turns of tape (C-439). Tape edges of tape applied at preceding step together arid tape end of the tape to duct.

• COPYRIGHT © 2007 BY DART AEROSPACE LTD. •
THIS DOCUMENT IS PRIVATE AND CONFIDENTIAL AND IS SUPPLIED ON THE EXPRESS CONDITION THAT IT IS NOT TO BE USED FOR ANY PURPOSE OR COPIED OR COMMUNICATED TO ANY OTHER PERSON WITHOUT WRITTEN PERMISSION FROM DART AEROSPACE LTD.

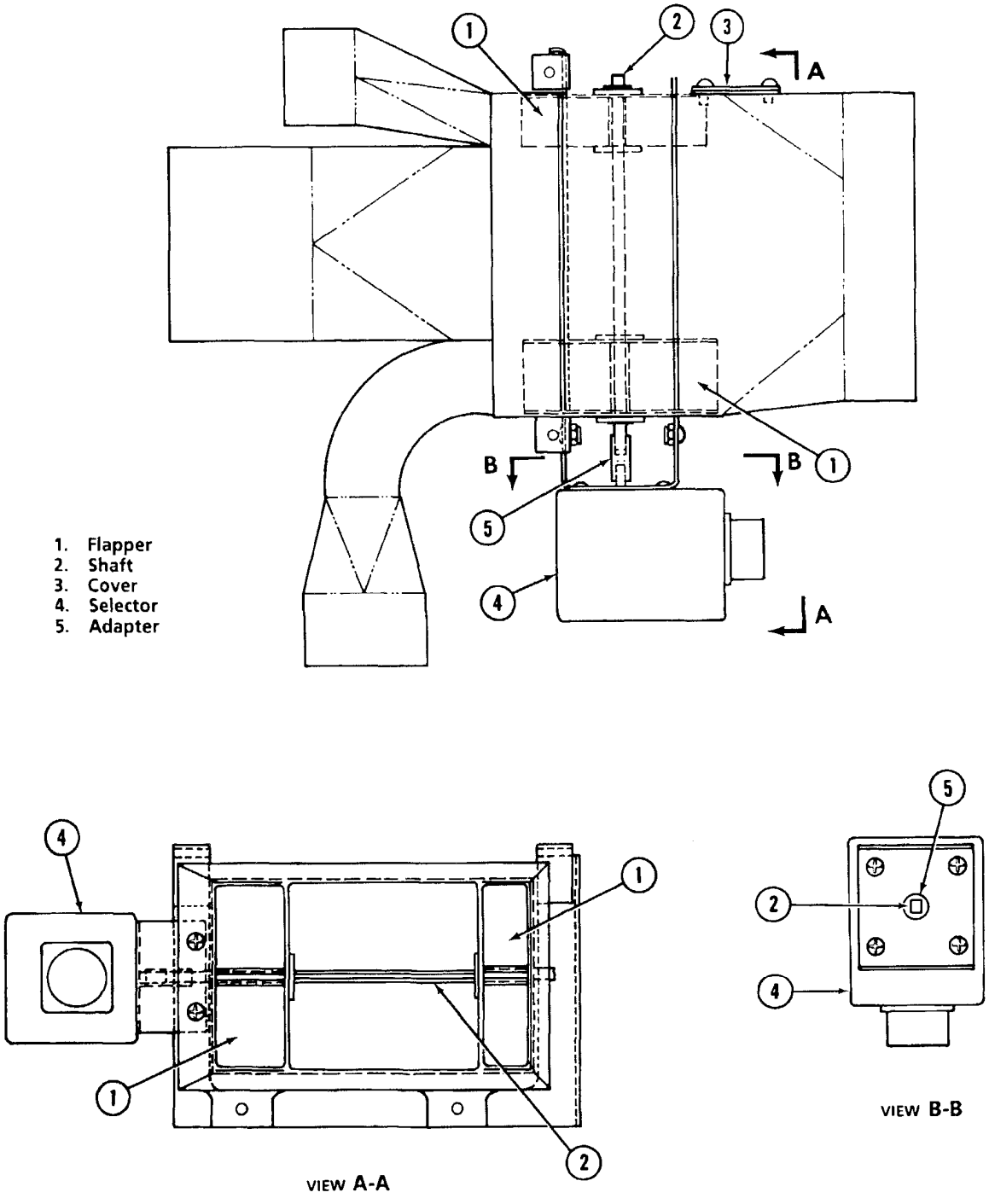

Figure 21-4. Outlet control valve

• COPYRIGHT © 2007 BY DART AEROSPACE LTD. •
THIS DOCUMENT IS PRIVATE AND CONFIDENTIAL AND IS SUPPLIED ON THE EXPRESS CONDITION THAT IT IS NOT TO BE USED FOR ANY PURPOSE OR COPIED OR COMMUNICATED TO ANY OTHER PERSON WITHOUT WRITTEN PERMISSION FROM DART AEROSPACE LTD.

21.10 VENTILATION/DEFOG SYSTEM

Ventilation/defog system delivers outside air to windshield nozzles and nozzles on sides of instrument panel. Ram air intake grills are located on cabin rose below each windshield. Each grill is connected to a plenum chamber and ducts connect chambers to output nozzles. Air intake volume is controlled by knobs near instrument panel nozzles. When ram air is low, outside air may be pulled in by turning on the blower which is part of the system.

21.11 VENTILATION BLOWER

21.11.1 Removal

21.11.1.1 Remove clamps on flexible ducts at each end of blower (33, Figure 21-2) and slide ducts back clear of blower.

21.11.1.2 Disconnect electrical wire to blower and remove unit.

21.11.2 Installation

21.11.2.1 Position blower in system and slide flexible duct over ends of blower.

21.11.2.2 Install clamps and connect electrical wire knobs near instrument panel nozzles.

21.11.2.3 Perform operational check (Chapter 96) system.

• COPYRIGHT © 2007 BY DART AEROSPACE LTD. •
THIS DOCUMENT IS PRIVATE AND CONFIDENTIAL AND IS SUPPLIED ON THE EXPRESS CONDITION THAT IT IS NOT TO BE USED FOR ANY PURPOSE OR COPIED OR COMMUNICATED TO ANY OTHER PERSON WITHOUT WRITTEN PERMISSION FROM DART AEROSPACE LTD.

CHAPTER 25
EQUIPMENT AND FURNISHINGS (25-00-00)

REFER TO BHT-212-MM

• COPYRIGHT © 2007 BY DART AEROSPACE LTD. •
THIS DOCUMENT IS PRIVATE AND CONFIDENTIAL AND IS SUPPLIED ON THE EXPRESS CONDITION THAT IT IS NOT TO BE USED FOR ANY PURPOSE OR COPIED OR COMMUNICATED TO ANY OTHER PERSON WITHOUT WRITTEN PERMISSION FROM DART AEROSPACE LTD.

CHAPTER 26
FIRE PROTECTION
(26-00-00)

• COPYRIGHT © 2007 BY DART AEROSPACE LTD. •
THIS DOCUMENT IS PRIVATE AND CONFIDENTIAL AND IS SUPPLIED ON THE EXPRESS CONDITION THAT IT IS NOT TO BE USED FOR ANY PURPOSE OR COPIED OR COMMUNICATED TO ANY OTHER PERSON WITHOUT WRITTEN PERMISSION FROM DART AEROSPACE LTD.

CHAPTER 26 – FIRE PROTECTION (26-00-00)

TABLE OF CONTENTS

Table of Contents 2
26.1 Fire Protection 3
26.2 Engine Fire Detection System 3
26.3 Test Switch 3
26.4 Testing – Fire Detection System 3
26.5 Periodical Testing – Fire Detector System 3
26.6 Fire Detector Control Amplifier 4
26.7 Cargo Compartment Smoke Detection System 6
26.8 Cargo Compartment Smoke Detector 6
26.8.1 Removal 6
26.8.2 Inspection 6
26.8.3 Installation 6
26.8.4 Operational check 6
26.9 Fire Extinguisher 8
26.10 Engine Fire Extinguisher 8
26.10.1 Testing – Discharge Circuit 8
26.10.2 Removal 8
26.10.3 Installation 8
26.10.4 Recharging 10
26.11 Portable Fire Extinguishers and Brackets 10
26.11.1 Removal 10
26.11.2 Inspection 10
26.11.3 Repair 10
26.11.4 Installation 10

LIST OF FIGURES

Figure 26-1. Fire Detection System Tester 5
Figure 26-2. Cargo Compartment Smoke Detector 7
Figure 26-3. Engine Fire Extinguisher 9
Figure 26-4. Portable Fire Extinguishers and Brackets 11

• COPYRIGHT © 2007 BY DART AEROSPACE LTD. •
THIS DOCUMENT IS PRIVATE AND CONFIDENTIAL AND IS SUPPLIED ON THE EXPRESS CONDITION THAT IT IS NOT TO BE USED FOR ANY PURPOSE OR COPIED OR COMMUNICATED TO ANY OTHER PERSON WITHOUT WRITTEN PERMISSION FROM DART AEROSPACE LTD.

26.1 FIRE PROTECTION

Fire protection consists of fire detection systems which give warning of fire in the engine compartment, hand fire extinguishers in the cabin, and an engine fire extinguishing system.

26.2 ENGINE FIRE DETECTION SYSTEM

The fire detection system consists of a control amplifier mounted in the aft electrical compartment, three infrared fire detectors strategically mounted in the engine section, a smoke detector mounted in the baggage compartment, and a warning light on the instrument panel. The system utilizes infrared radiation as a principle of operation. Heat level or rate of heat rise has no effect in the sensing method. The cockpit warning light will illuminate (steady) when any one of the detectors senses the infrared radiation of a fire. In the event of a fire in the cargo compartment, the control amplifier will be triggered by the smoke detector unit sensing the accumulation of smoke. The fire warning light will illuminate (flashing on and off) intermittently. Upon elimination of the fire the entire system automatically recycles to normal and is again ready to detect. The control amplifier is designed with a fail-safe feature so that a shorted or open detector circuit will have no effect on the normal operation and will not cause the warning light to illuminate.

26.3 TEST SWITCH

A functional test switch is provided on the instrument panel for testing the detectors and smoke detector unit. Switches 1, 2, and 3 will produce a steady light. Cargo fire test switch will produce a flashing light for the check of the cargo compartment smoke detector.

26.4 TESTING – FIRE DETECTION SYSTEM

26.4.1 Close FIRE DET circuit breaker. Check that FIRE CAUTION lights are not illuminated.

26.4.2 Push FIRE DET TEST #1 switch. Check that lamps of FIRE CAUTION ('T' Handle) light illuminate steadily.

26.4.3 Push FIRE DET TEST switches successively #2 and #3. Check that lamps of FIRE CAUTION lights are illuminated in each of the positions.

26.4.4 Push CARGO FIRE TEST switch. Check that two lamps of CARGO FIRE CAUTION light flash on and off.

26.4.5 Check that FIRE CAUTION lights are extinguished when switches are released.

26.5 PERIODICAL TESTING – FIRE DETECTOR SYSTEM

Connect the 30-502 Pyrotector tester (Figure 26-1) into the wiring and complete the following routine tests:

26.5.1 Connect the four cables to the installed system by connecting two cables to the control amplifier and the other two cables to the cables removed from the control amplifier. The cables can only be installed one way.

26.5.2 Apply power to the system.

26.5.3 Check for nominal 28 volt supply by pressing the line-meter switch (5) to the LINE X2 position. Line voltage should be equal to meter reading multiplied by two.

26.5.4 Check the control amplifier input circuits for each detector in the system by holding the DETECTOR TEST switches (4), one at a time in the downward position. If the amplifier is functioning properly the FIRE ALARM light (6) will glow and the voltmeter will indicate a voltage increase from its normal residual reading.

• COPYRIGHT © 2007 BY DART AEROSPACE LTD. •
THIS DOCUMENT IS PRIVATE AND CONFIDENTIAL AND IS SUPPLIED ON THE EXPRESS CONDITION THAT IT IS NOT TO BE USED FOR ANY PURPOSE OR COPIED OR COMMUNICATED TO ANY OTHER PERSON WITHOUT WRITTEN PERMISSION FROM DART AEROSPACE LTD.

26.5.5 Check all detector circuits by pushing the DETECTOR TEST switches (4), one at a time. No increased voltage should be noted from detectors located in dark areas of helicopter and a maximum of six volts is acceptable from detectors located in areas of moderate or high intensity daylight.

26.5.6 Connect the plug from the test light extension (2) to the plug marked 28 VDC OUT (7).

26.5.7 Place the TEST LIGHT switch (3) in the ON position.

26.5.8 Place each of the DETECTOR TEST switches (4) in up position for the detector to be tested.

26.5.9 Place the test light (red knurled side against the viewing cap) against the detector. The alarm light should glow indicating relay operation and a voltage increase should be evident on the meter.

26.5.10 Rotate the test light so the white (smooth) end is against the viewing cap of the detector. There should be an increase in voltage indication but no alarm light indication.

26.5.11 Place No. 1 DETECTOR TEST switch (4) in up position.

26.5.12 Place the remote system test switch in the first position.

26.5.13 The FIRE ALARM light (6) and the REMOTE SYSTEM ALARM light should glow. The tester meter will indicate a voltage increase.

26.5.14 Repeat the above for corresponding tester detector test positions and vehicle test switch positions.

26.5.15 Return of vehicle test switch to NORMAL position should result in clearing of alarm condition.

26.6 FIRE DETECTOR CONTROL AMPLIFIER

The control amplifier is a closed assembly, housing solid-state electronic components and a relay. The control amplifier is located on the wall of the aft electrical compartment. The fire detection amplifier and the smoke detector amplifier circuits are both contained in the one control amplifier. Power and alarm circuit connections are made to the 14-pin connector at one end of the unit; detector connections are made to the 16-pin connector at the other end of the unit.

• COPYRIGHT © 2007 BY DART AEROSPACE LTD. •
THIS DOCUMENT IS PRIVATE AND CONFIDENTIAL AND IS SUPPLIED ON THE EXPRESS CONDITION THAT IT IS NOT TO BE USED FOR ANY PURPOSE OR COPIED OR COMMUNICATED TO ANY OTHER PERSON WITHOUT WRITTEN PERMISSION FROM DART AEROSPACE LTD.

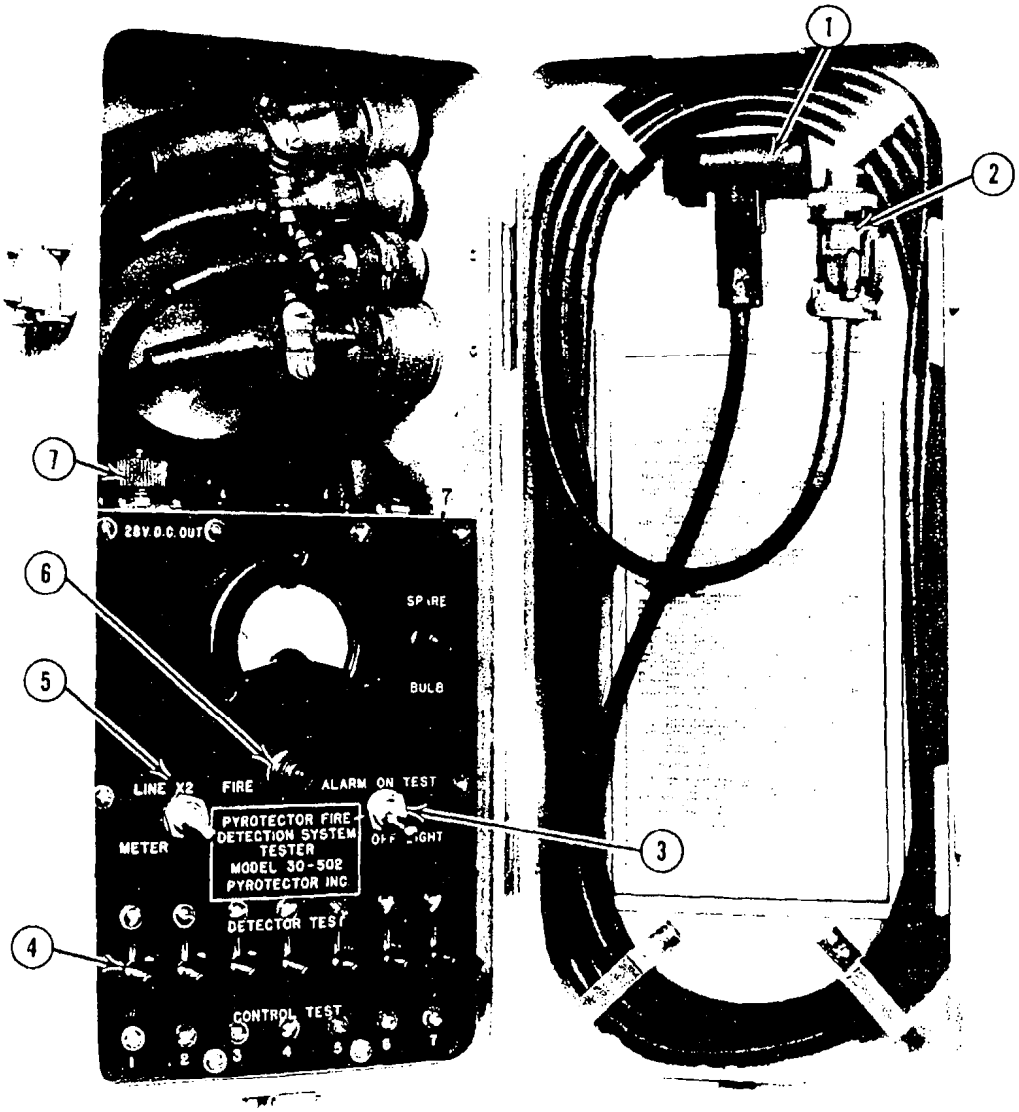

1. Test Light Extension
2. Test Light Extension
3. Test Light Switch
4. Detector Test Switches
5. Line Meter Switch
6. Fire Alarm Light
7. 28 V.D.C. OUT

(Procure from: Pyrotector Inc.
349 Lincoln Street
Hingham, Massachusetts 02043)

Pyrotector Tester 30-502 - Used to test fire detection system in helicopter.

Figure 26-1. Fire Detection System Tester

• COPYRIGHT © 2007 BY DART AEROSPACE LTD. •
THIS DOCUMENT IS PRIVATE AND CONFIDENTIAL AND IS SUPPLIED ON THE EXPRESS CONDITION THAT IT IS NOT TO BE USED FOR ANY PURPOSE OR COPIED OR COMMUNICATED TO ANY OTHER PERSON WITHOUT WRITTEN PERMISSION FROM DART AEROSPACE LTD.

26.7 CARGO COMPARTMENT SMOKE DETECTION SYSTEM

The cargo compartment smoke detector is a closed assembly housing solid-state electronic components and a light sensitive detector. The detector (4, Figure 26-2) is located in the forward end of the baggage compartment roof. A protective screen is installed over the detector to provide protection from items stowed in the compartment. The instant smoke reduces light transmission in the baggage compartment 30 to 35% below that of clear air, the detector causes the CARGO FIRE warning light on the instrument panel to flash intermittently. For more detailed description and wiring diagrams, refer to Chapters 96 and 98.

The CARGO FIRE TEST switch provides a means to test the cargo compartment smoke detection system.

26.8 CARGO COMPARTMENT SMOKE DETECTOR

The smoke detector is a sealed, solid-state unit. Refer to Chapter 96 for additional information.

26.8.1 Removal

26.8.1.1 Remove all electrical power from helicopter.

26.8.1.2 Open cargo compartment door (9, Figure 26-2).

26.8.1.3 Remove screws (7) and screen (6).

26.8.1.4 Disconnect electrical connector (5),

26.8.1.5 Remove screws (3) and washers (2). Remove smoke detector (4).

26.8.2 Inspection

26.8.2.1 Inspect smoke detector for physical damage.

26.8.2.2 Inspect electrical connector for pin alignment and contact retention.

26.8.3 Installation

26.8.3.1 Align mounting holes in detector (4, Figure 26-2) with airframe mounting holes.

26.8.3.2 Install screws (3) and washers (2).

26.8.3.3 Connect electrical connector (5).

26.8.3.4 Install screen (6) with screws (7) and washers (8).

26.8.3.5 Close cargo compartment door.

26.8.3.6 Perform operational check (paragraph 26-17).

26.8.4 Operational check

Perform operational check after any maintenance on cargo compartment smoke detection system (Chapter 96).

• COPYRIGHT © 2007 BY DART AEROSPACE LTD. •
THIS DOCUMENT IS PRIVATE AND CONFIDENTIAL AND IS SUPPLIED ON THE EXPRESS CONDITION THAT IT IS NOT TO BE USED FOR ANY PURPOSE OR COPIED OR COMMUNICATED TO ANY OTHER PERSON WITHOUT WRITTEN PERMISSION FROM DART AEROSPACE LTD.

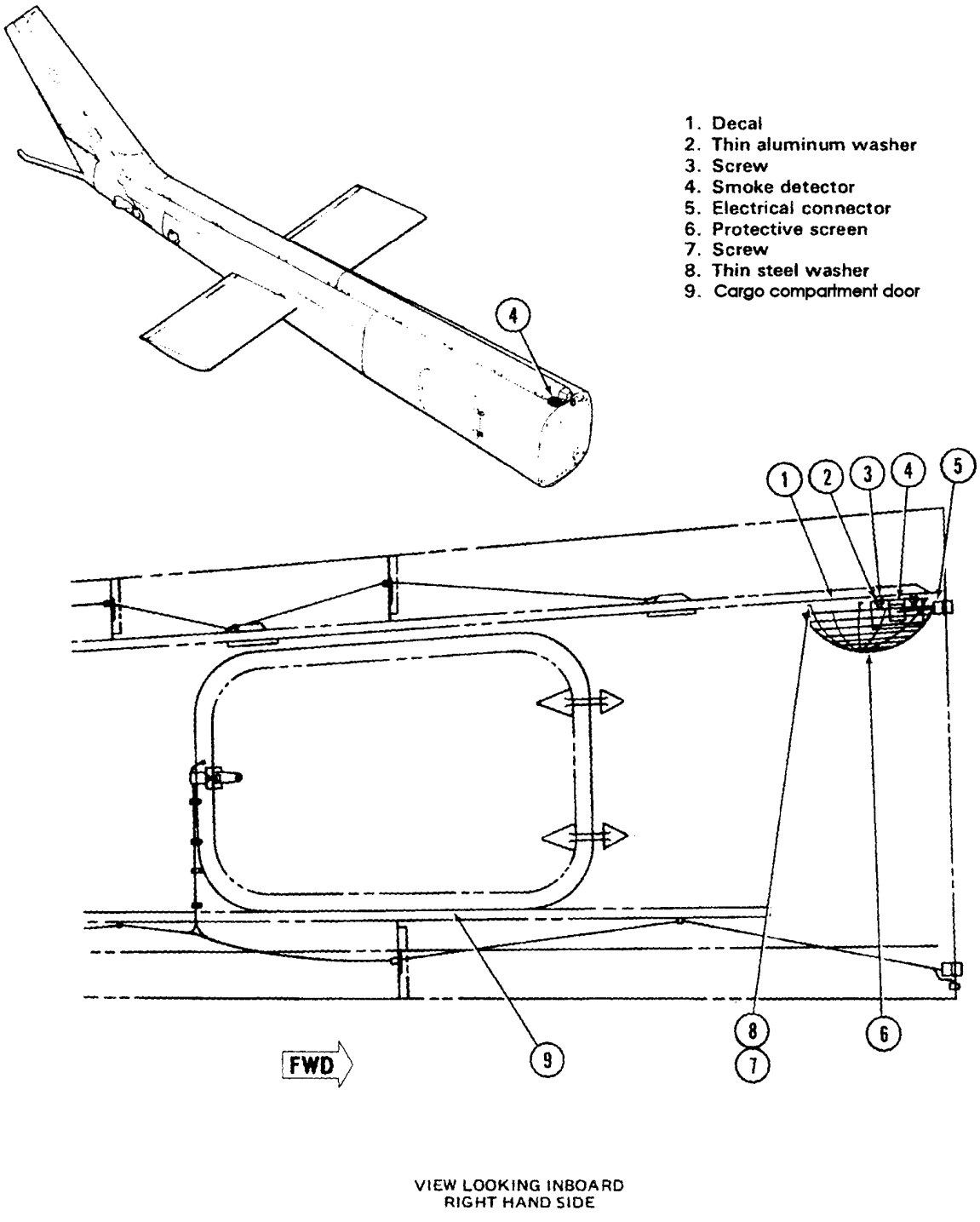

Figure 26-2. Cargo Compartment Smoke Detector

• COPYRIGHT © 2007 BY DART AEROSPACE LTD. •
THIS DOCUMENT IS PRIVATE AND CONFIDENTIAL AND IS SUPPLIED ON THE EXPRESS CONDITION THAT IT IS NOT TO BE USED FOR ANY PURPOSE OR COPIED OR COMMUNICATED TO ANY OTHER PERSON WITHOUT WRITTEN PERMISSION FROM DART AEROSPACE LTD.

26.9 FIRE EXTINGUISHER

Two hand type, manually operated, fire extinguishers are furnished with the helicopter. One is located to the right of the pilot's seat on the floor. The other is mounted on the left side of the cabin. Mounting brackets are of the quick opening type for rapid removal of the extinguishers.

26.10 ENGINE FIRE EXTINGUISHER

The engine fire extinguisher system consists of a release switch, located on the upper center panel of the instrument panel, and a fire extinguisher cartridge located on the left side of service deck aft of engine.

The engine fire extinguisher, located on the service deck, is used to extinguish fires in the engine compartment. A 1500 PSI pressure gage on the side of the sphere indicates internal pressure. A fitting and integral thermal relief and fill valve on the opposite side of the sphere provides the means for charging the unit. This valve contains a fusible alloy which acts as a thermal relief valve when the internal temperature of the charged unit exceeds the maximum limits. An electrically actuated squib screwed into the housing assembly provides the means for controlling the release of the extinguishing agent. When the squib is actuated, an explosive charge breaks the valve plug, thus releasing the agent into the system. The FIRE EXT circuit breaker and the ENGINE FIRE EXTINGUISHER switch, both located on the overhead console, control the 28 VDC power to actuate the squib.

In the event a container is subjected to excessive heat, the fill and thermal relief fitting will open and allow the extinguishing agent to escape. During this process, the discharge indicator disc will be blown out to provide a visual indication of the event.

26.10.1 Testing – Discharge Circuit

26.10.1.1 Refer to 96.13.5.

26.10.2 Removal

26.10.2.1 Disconnect the two electrical wires.

26.10.2.2 Disconnect the tube assembly (2, Figure 26-3) from the extinguisher output connector.

26.10.2.3 Disconnect tube assembly (4) from the extinguisher fill-relief connector.

26.10.2.4 Remove the four mounting bolts and remove fire extinguisher.

26.10.3 Installation

26.10.3.1 Place the fire extinguisher on mounting bracket. Use AN960-416L washers between lugs of fire extinguisher and bracket for alignment, maximum of three washers at each lug. Install bolt with AN970-4 washer under head. Install washer and nut.

26.10.3.2 Connect tube assembly (4) to the extinguisher fill-relief valve.

INDICATION OF TROUBLE	PROBABLE CAUSE	CORRECTIVE ACTION
No voltage at fire extinguisher cartridge connector	Defective FIRE EXTINGUISHER circuit breaker	Replace circuit breaker
	Defective ENGINE FIRE EXTINGUISHER switch	Replace switch
	Defective wiring	Repair or replace wiring

• COPYRIGHT © 2007 BY DART AEROSPACE LTD. •
THIS DOCUMENT IS PRIVATE AND CONFIDENTIAL AND IS SUPPLIED ON THE EXPRESS CONDITION THAT IT IS NOT TO BE USED FOR ANY PURPOSE OR COPIED OR COMMUNICATED TO ANY OTHER PERSON WITHOUT WRITTEN PERMISSION FROM DART AEROSPACE LTD.

NOTE: *The manifold (1, Figure 26-3) must be free of dents and other mechanical damage, except as noted below. It must be kept clear of dirt and debris internally and the discharge holes must be open.*

NOTE: *A smooth dent is acceptable in item (1) for clearance of jam nut on inner leg of tripod. Maximum dent size is 1.5" (38.1 mm) parallel to tube and 0.25" (6.4 mm) in depth.*

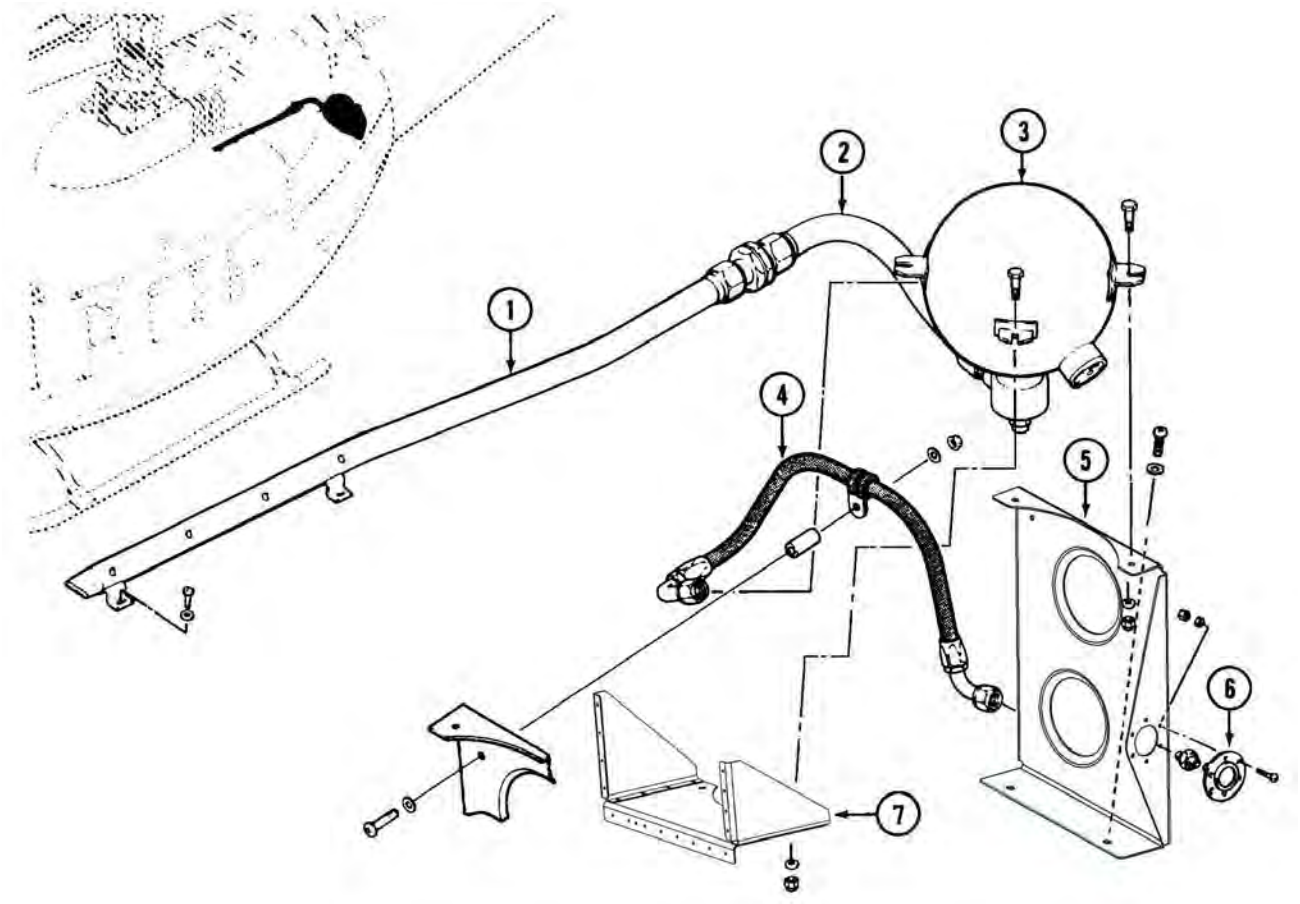

1. Manifold Assembly (D212-725-1-931)
2. Tube Assembly (D212-725-1-925)
3. Container Weld Assembly
4. Flexible Hose
5. Bracket (D212-725-1-123)
6. Indicator
7. Bracket (D212-725-1-923)

Figure 26-3. Engine Fire Extinguisher

• COPYRIGHT © 2007 BY DART AEROSPACE LTD. •
THIS DOCUMENT IS PRIVATE AND CONFIDENTIAL AND IS SUPPLIED ON THE EXPRESS CONDITION THAT IT IS NOT TO BE USED FOR ANY PURPOSE OR COPIED OR COMMUNICATED TO ANY OTHER PERSON WITHOUT WRITTEN PERMISSION FROM DART AEROSPACE LTD.

26.10.3.3 Connect tube assembly (2) to the extinguisher output connector.

26.10.3.4 Remove the bare electrical wire between the two electrical terminals and connect the electrical wiring. (Refer to Chapter 98.)

26.10.4 Recharging

The 2241-009 Fire Bottle must be charged with 6 lbs of Halon 1301 by an approved facility.

26.11 PORTABLE FIRE EXTINGUISHERS AND BRACKETS

Two hand-held, portable fire extinguishers are installed in quick release brackets at the locations illustrated in Figure 26-4. These extinguishers are filled with monobromotrifluoromethane extinguishing agent.

NOTE

Maintenance procedures for both fire extinguishers and brackets are identical.

26.11.1 Removal

26.11.1.1 Release clamp (7, Figure 26-4) and remove fire extinguisher.

26.11.1.2 Remove bolts (8) and washer (9). Remove bracket (11) and washers (10).

26.11.2 Inspection

26.11.2.1 Inspect fire extinguisher (6, Figure 26-4) for state of charge by weight (or by visual indicator, if installed).

26.11.2.2 Record inspection on tag attached to extinguisher (detail A).

26.11.2.3 Inspect bracket and attaching hardware for obvious damage arid security of installation and serviceability.

26.11.3 Repair

26.11.3.1 Recharge fire extinguisher as required at a facility equipped and authorized to service monobromotrifluoromethane type extinguishers.

26.11.3.2 Replace unserviceable bracket parts and retaining hardware.

26.11.4 Installation

26.11.4.1 Position bracket (11, Figure 26-4) in position with washers (10) between bracket and mounting surface.

26.11.4.2 Install bolt (8) and washers (9). Tighten bolts.

26.11.4.3 Open retaining clamp (7) and position fire extinguisher in bracket. Close retaining clamp.

26.11.4.4 Verify bracket is securely installed in helicopter and fire extinguisher is securely installed in retaining bracket.

• COPYRIGHT © 2007 BY DART AEROSPACE LTD. •
THIS DOCUMENT IS PRIVATE AND CONFIDENTIAL AND IS SUPPLIED ON THE EXPRESS CONDITION THAT IT IS NOT TO BE USED FOR ANY PURPOSE OR COPIED OR COMMUNICATED TO ANY OTHER PERSON WITHOUT WRITTEN PERMISSION FROM DART AEROSPACE LTD.

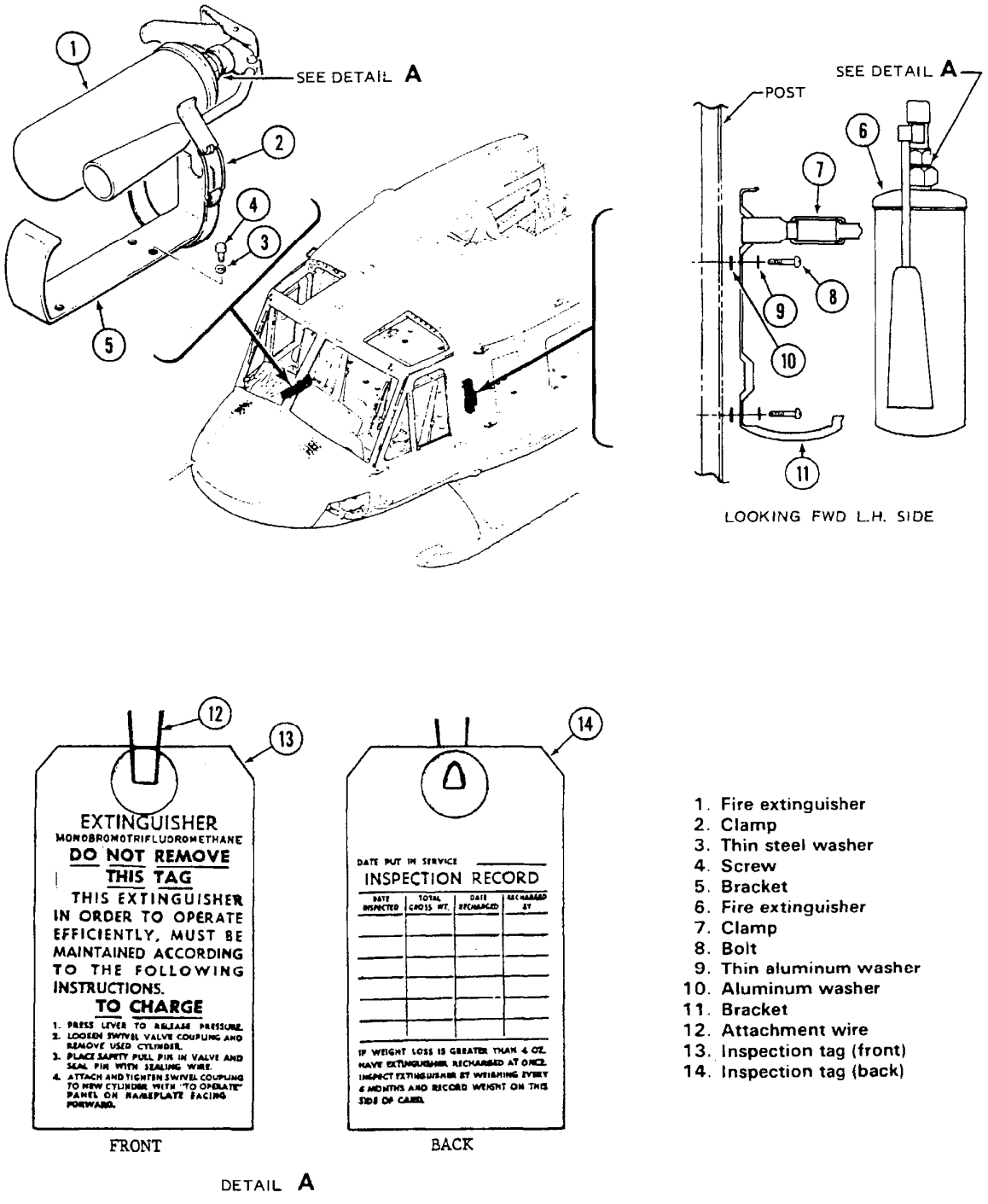

Figure 26-4. Portable Fire Extinguishers and Brackets

• COPYRIGHT © 2007 BY DART AEROSPACE LTD. •
THIS DOCUMENT IS PRIVATE AND CONFIDENTIAL AND IS SUPPLIED ON THE EXPRESS CONDITION THAT IT IS NOT TO BE USED FOR ANY PURPOSE OR COPIED OR COMMUNICATED TO ANY OTHER PERSON WITHOUT WRITTEN PERMISSION FROM DART AEROSPACE LTD.

CHAPTER 28
FUEL SYSTEM
(28-00-00)

• COPYRIGHT © 2007 BY DART AEROSPACE LTD. •
THIS DOCUMENT IS PRIVATE AND CONFIDENTIAL AND IS SUPPLIED ON THE EXPRESS CONDITION THAT IT IS NOT TO BE USED FOR ANY PURPOSE OR COPIED OR COMMUNICATED TO ANY OTHER PERSON WITHOUT WRITTEN PERMISSION FROM DART AEROSPACE LTD.

TABLE OF CONTENTS

Table of Contents 2
List of Figures 4
List Of Tables 4
Consumable Material List 5
28.1 General 6
28.2 Safety Precautions 6
28.3 Fuel Storage and Distribution System 7
28.4 Description and Operation 7
28.5 Troubleshooting Fuel System 11
28.6 Operational Check 12
28.7 Pressure Testing 12
28.8 Forward Fuel Cells 12
28.8.1 Removal 12
28.8.2 Cleaning 15
28.8.3 Inspection 15
28.8.4 Installation 15
28.9 Aft Fuel Cells 17
28.10 Aft Outboard Fuel Cells 17
28.10.1 Removal 17
28.10.2 Cleaning 20
28.10.3 Inspection 20
28.10.4 Installation 20
28.11 Aft Center Cell 22
28.11.1 Removal 22
28.11.2 Cleaning 23
28.11.3 Inspection 23
28.11.4 Installation 23
28.12 Fuel Sump Assembly 25
28.12.1 Removal 25
28.12.2 Inspection 25
28.12.3 Installation 25
28.13 Flow Switches 26
28.13.1 Removal 26
28.13.2 Installation 26
28.14 Fuel Boost Pumps 26
28.14.1 Removal 26
28.14.2 Installation 27
28.15 Canister Type Boost Pump Cartridge 27
28.15.1 Removal 27
28.15.2 Cleaning 27
28.15.3 Repair 28
28.15.4 Installation 28
28.16 Ejector Pump 31
28.16.1 Removal 31
28.16.2 Cleaning 31
28.16.3 Installation 31

• COPYRIGHT © 2007 BY DART AEROSPACE LTD. •
THIS DOCUMENT IS PRIVATE AND CONFIDENTIAL AND IS SUPPLIED ON THE EXPRESS CONDITION THAT IT IS NOT TO BE USED FOR ANY PURPOSE OR COPIED OR COMMUNICATED TO ANY OTHER PERSON WITHOUT WRITTEN PERMISSION FROM DART AEROSPACE LTD.

28.17 Flapper Valve 31
28.17.1 Removal 31
28.17.2 Inspection 32
28.17.3 Installation 32
28.18 Low Fuel Level Warning Switches 33
28.18.1 Removal 33
28.18.2 Installation 33
28.19 Forward Cell Fuel Quantity Probes 36
28.19.1 Removal 36
28.19.2 Installation 36
28.20 Aft Fuel Quantity Probe 36
28.20.1 Removal 36
28.20.2 Installation 38
28.21 Sump Drain Valve 38
28.21.1 Removal 38
28.21.2 Installation 38
28.23 Forward Interconnect Valve 40
28.23.1 Removal 40
28.23.2 Installation 40
28.24 Aft Interconnect Valve 40
28.24.1 Removal 40
28.24.2 Installation 41
28.25 Defuel Valves 41
28.25.1 Removal 41
28.25.2 Installation 41
28.26 Siphon Breaker Valves 41
28.26.1 Removal 41
28.26.2 Installation 41
28.27 Fuel Shutoff Valve and Fuel Valve Manifold 41
28.27.1 Removal 42
28.27.2 Installation 42
28.28 Main Fuel Filter 45
28.28.1 Removal 46
28.28.2 Installation 46
28.29 Pressure Transmitter 46
28.29.1 Removal 46
28.29.2 Installation 47
28.30 Governor Bleed Line Check Valve 47
28.30.1 Removal 47
28.30.2 Installation 47

• COPYRIGHT © 2007 BY DART AEROSPACE LTD. •
THIS DOCUMENT IS PRIVATE AND CONFIDENTIAL AND IS SUPPLIED ON THE EXPRESS CONDITION THAT IT IS NOT TO BE USED FOR ANY PURPOSE OR COPIED OR COMMUNICATED TO ANY OTHER PERSON WITHOUT WRITTEN PERMISSION FROM DART AEROSPACE LTD.

LIST OF FIGURES

Figure 28-1. Eagle 'S' Fuel system 8
Figure 28-1. Detail A.- Siphon Breaker Valve 9
Figure 28-2. Eagle 'S' Fuel System Schematic 10
Figure 28-3. Forward fuel cell 14
Figure 28-4. Forward fuel cell lacing 17
Figure 28-5. Aft fuel cell 19
Figure 28-6. Tying Sequence — aft fuel cell 21
Figure 28-7. Fuel cell sump (left side typical) 29
Figure 28-8. Fuel boost sump cartridge replacement 30
Figure 28-9. Ejector sump 34
Figure 28-10. Flapper valve 35
Figure 28-11. Fuel quantity probes — forward fuel cell 37
Figure 28-12. Aft center fuel cell access door 39
Figure 28-13. Fuel shutoff valve and fuel valve manifold 44
Figure 28-14. Main fuel filter 45
Figure 28-15. Fuel Pressure Transmitter 48

LIST OF TABLES

Table 28-1. Siphon Breaker Valve Item Detail A and B 9
Table 28-2. Troubleshooting fuel system. 11

• COPYRIGHT © 2007 BY DART AEROSPACE LTD. •
THIS DOCUMENT IS PRIVATE AND CONFIDENTIAL AND IS SUPPLIED ON THE EXPRESS CONDITION THAT IT IS NOT TO BE USED FOR ANY PURPOSE OR COPIED OR COMMUNICATED TO ANY OTHER PERSON WITHOUT WRITTEN PERMISSION FROM DART AEROSPACE LTD.

CONSUMABLE MATERIAL LIST

The following consumable materials are required to perform the maintenance procedures within this chapter.

ITEM No.	NOMENCLATURE	CAGE/FSCM/ SOURCE
C-008	Petrolatum, VV-P-236	Commercial
C-016	Lubricating Oil, Jet Engine, MIL-O-6081, Grade 1005	Commercial
C-302	Methyl Alcohol, O-M-232	Commercial
C-311	Adhesive, 299-947-107, Type II, Class 4 or EC2126	97499 76381
C-383	Rubber Cement, Natural Rubber Base, Low Adhesion, No. 4 (Not Fuel and Oil Resistant)	97499
C-405	Lockwire, MS20995C32 (0.032 Inch Dia.)	Commercial
C-408	Talcum Powder, Technical T1, MIL-T-50036 (1)	Commercial
C-480	Nylon Cord, MIL-C-5040, Type III	84063

• COPYRIGHT © 2007 BY DART AEROSPACE LTD. •
THIS DOCUMENT IS PRIVATE AND CONFIDENTIAL AND IS SUPPLIED ON THE EXPRESS CONDITION THAT IT IS NOT TO BE USED FOR ANY PURPOSE OR COPIED OR COMMUNICATED TO ANY OTHER PERSON WITHOUT WRITTEN PERMISSION FROM DART AEROSPACE LTD.

28.1 GENERAL

This chapter provides instructions for maintenance of the airframe-mounted fuel supply system. Refer to Chapter 76 for engine fuel system and control linkage.

Fuel flows from the boost pumps (12, Figure 28-1) to a manifold valve (2). The manifold valve has internal check valves which prevent back flow in the event that one boost pump should fail. The manifold has thermal relief provisions, which consist of very small orifices, to allow a small amount of fuel to return to the fuel cells to prevent thermal pressure buildup when the helicopter is not operating.

Fuel flows from the manifold valve (2) to the fuel shutoff valve (4). The shutoff valve is electrically operated and is controlled by the pilot. It incorporates a red-painted, manual override handle to serve as a visual indication of the shutoff valve position. It also permits manual operation during maintenance procedures, when electrical power is not available.

A thermal relief valve is an integral part of the main shutoff valve. The thermal relief valve serves to relieve possible pressure buildup in the upper portion of the fuel system when the main fuel shutoff valve is off. The thermal relief valve will open between 90 and 120 PSI.

Fuel flows from the fuel shutoff valve (4) to the main fuel filter (5) in the engine compartment. The filter incorporates an impending bypass warning switch. In the event the pressure drop across the filter indicates that the filter is becoming clogged, the worded segment FUEL FILTER on the caution panel will light up to indicate the impending bypass condition. If the filter is clogged to the extent that insufficient fuel will pass, a bypass valve will open and permit fuel to bypass the filter. A pressure transmitter (1) is mounted adjacent to the filter. The pressure transmitter causes the fuel pressure gage on the instrument panel to indicate the boost pump pressure.

Fuel flows from the main fuel filter (5) to the helicopter engine. A warning system to indicate failure of either fuel pump, on engine fuel control, is provided. If either fuel pump should fail, the pressure switch associated with that pump will cause the worded segment ENG FUEL PUMP on the caution panel to light.

28.2 SAFETY PRECAUTIONS

WARNING

ONLY APPROVED, EXPLOSION PROOF TYPE LIGHTS ARE TO BE USED NEAR OPEN FUEL CELLS AND FUEL LINES.

CAUTION

HANDLE CELL WITH EXTREME CARE DURING REMOVAL AND INSTALLATION TO PREVENT DAMAGE TO CELLS. DO NOT ATTEMPT TO REMOVE, FOLD, OR INSTALL A CELL WHEN CELL TEMPERATURE IS BELOW 65°F (18°C).

ALL FUELING AND DEFUELING OPERATIONS SHALL BE CONDUCTED IN AREAS WHERE FIRE HAZARDS ARE REDUCED TO A MINIMUM. FOR COMPLETE DEFUELING / REFUELING PROCEDURES READ AND FOLLOW INSTRUCTIONS CONTAINED IN CHAPTER 12 OF THIS MANUAL.

• COPYRIGHT © 2007 BY DART AEROSPACE LTD. •
THIS DOCUMENT IS PRIVATE AND CONFIDENTIAL AND IS SUPPLIED ON THE EXPRESS CONDITION THAT IT IS NOT TO BE USED FOR ANY PURPOSE OR COPIED OR COMMUNICATED TO ANY OTHER PERSON WITHOUT WRITTEN PERMISSION FROM DART AEROSPACE LTD.

28.3 FUEL STORAGE AND DISTRIBUTION SYSTEM

28.4 DESCRIPTION AND OPERATION

The following paragraphs provide a functional description of the components which store and deliver fuel to the engine power sections.

28.4.1 The fuel supply is contained in five separate cells (Figures 28-1 and 28-2). The three aft cells supply fuel to two lower, independent, self-sealing cells which individually serve as supply sources for each power section. Each under-floor cell is equipped with a sump, a submerged electric motor-driven boost pump, a flow-actuated switch connected to a FUEL BOOST (left or right) caution panel segment to signal if pump is inoperative, a float switch connected to a FUEL LOW caution panel segment, a sump drain valve, a lateral baffle with a flapper valve allowing front-to-rear flow, and an ejector-type pump mounted on the front wall. A manual drain valve is also provided in the forward compartment.

28.4.2 The system filler cap is on the right aft cell. All cells are interconnected. De-fueling valves are provided on aft interconnect line below each under-floor tank sump. Vent lines from all cells are connected to a dual vent system equipped with siphon-breaker valves. Fuel quantity gage probes are located in center aft tank cell and in forward and rear compartments of both under-floor tanks. Capped connections, for use with either of two auxiliary fuel tank kits, are provided on system vent lines and on crossover fittings between forward and aft cells.

28.4.3 A governor bleed line equipped with a check valve returns excess fuel from the power section fuel control to the aft center fuel cell.

28.4.4 All fuel supply system controls, valves, pumps, and caution panels are powered by 28 VDC. The fuel pressure indicator requires 26 VAC, and fuel quantity indicator requires 115 VAC power (Chapter 96). In normal operation, both BOOST PUMP switches are ON, FUEL switch is ON to open shutoff valves. In this condition, fuel is being pumped from both (lower) tanks to the engine. Gravity feed from aft tank cells is keeping both lower tanks full and there is cross-flow between right and left systems.

If the FIRE PULL handle is used, the engine shutoff valve will not be closed. Either boost pump can be switched OFF or ON independently. While a pump is operating, regardless of shutoff valve position, there will be output through its flow switch to prevent a false caution panel indication of pump failure.

28.4.5 While there is fuel in the aft cells, both lower tanks will be kept full by gravity feed. When aft cells are empty, fuel quantity gage readings will be from the lower tank probes, either as TOTAL or LEFT or RIGHT according to selected position of the switch at the gage. When the level in one lower cell drops below the float switch, the corresponding FUEL LOW caution panel segment will illuminate.

28.4.6 Refer to Chapter 52 for locations of doors, panels, cowlings, and covers to be removed for access to fuel system components. Refer to Chapters 95, 96, and 98 for maintenance and testing of associated electrical systems.

• COPYRIGHT © 2007 BY DART AEROSPACE LTD. •
THIS DOCUMENT IS PRIVATE AND CONFIDENTIAL AND IS SUPPLIED ON THE EXPRESS CONDITION THAT IT IS NOT TO BE USED FOR ANY PURPOSE OR COPIED OR COMMUNICATED TO ANY OTHER PERSON WITHOUT WRITTEN PERMISSION FROM DART AEROSPACE LTD.

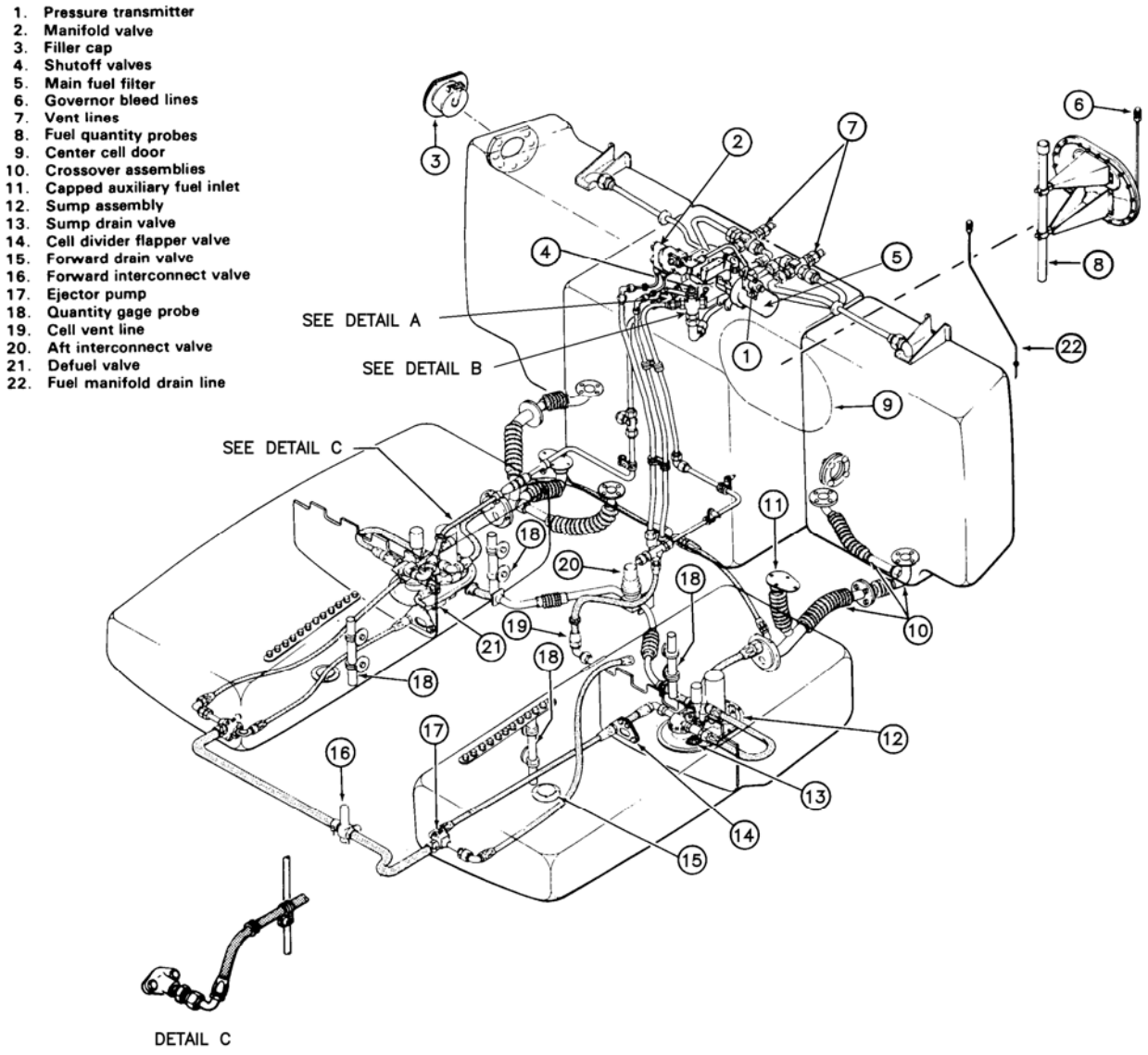

Note: *Fwd (Item 16) and Aft (Item 20) Interconnect valves must be lockwired open electrically disconnected unless DSB-D212-725-4 has been incorporated.*

Figure 28-1. Eagle 'S' Fuel system

• COPYRIGHT © 2007 BY DART AEROSPACE LTD. •
THIS DOCUMENT IS PRIVATE AND CONFIDENTIAL AND IS SUPPLIED ON THE EXPRESS CONDITION THAT IT IS NOT TO BE USED FOR ANY PURPOSE OR COPIED OR COMMUNICATED TO ANY OTHER PERSON WITHOUT WRITTEN PERMISSION FROM DART AEROSPACE LTD.

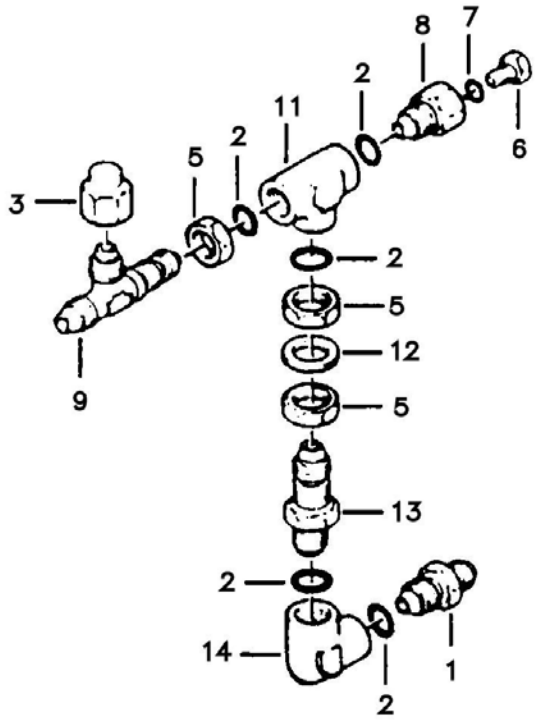

Figure 28-1. Detail A.- Siphon Breaker Valve

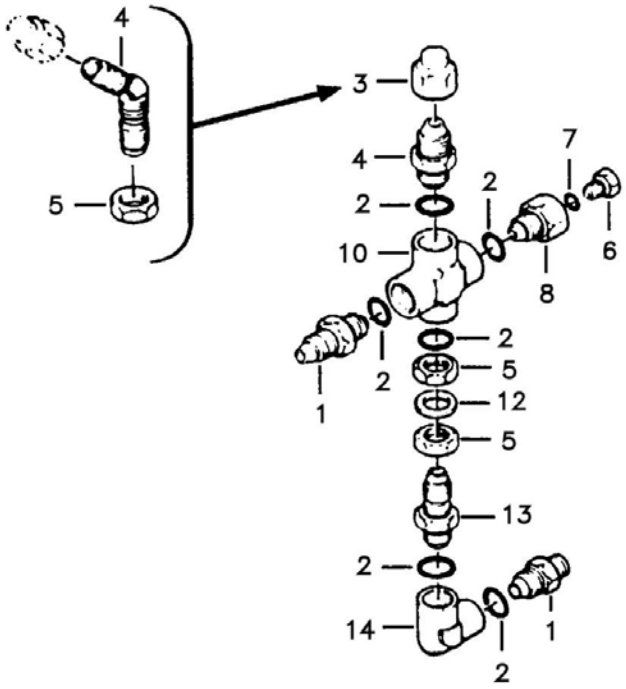

Figure 28-1. Detail B. - Siphon Breaker Valve

Table 28-1. Siphon Breaker Valve Item Detail A and B

Item Number	Part Number	Description
1	AN815-8D	Union
2	MS29512-08	Packing
3	AN929-8	Cap
4	AN929-8D or AN837-8D	Union or Elbow
5	AN924-8D	Nut
6	42C42604 or 204-061-689-001	Valve
7	MS29512-06	Packing
8	AN893-12D	Bushing
9	AN804D8	Tee
10	AN937D8	Cross
11	AN938D8	Tee
12	AN960PD1216L or AN960JD1216L	Washer
13	D212-725-1-093	Union
14	AN939D8	Elbow

• COPYRIGHT © 2007 BY DART AEROSPACE LTD. •
THIS DOCUMENT IS PRIVATE AND CONFIDENTIAL AND IS SUPPLIED ON THE EXPRESS CONDITION THAT IT IS NOT TO BE USED FOR ANY PURPOSE OR COPIED OR COMMUNICATED TO ANY OTHER PERSON WITHOUT WRITTEN PERMISSION FROM DART AEROSPACE LTD.

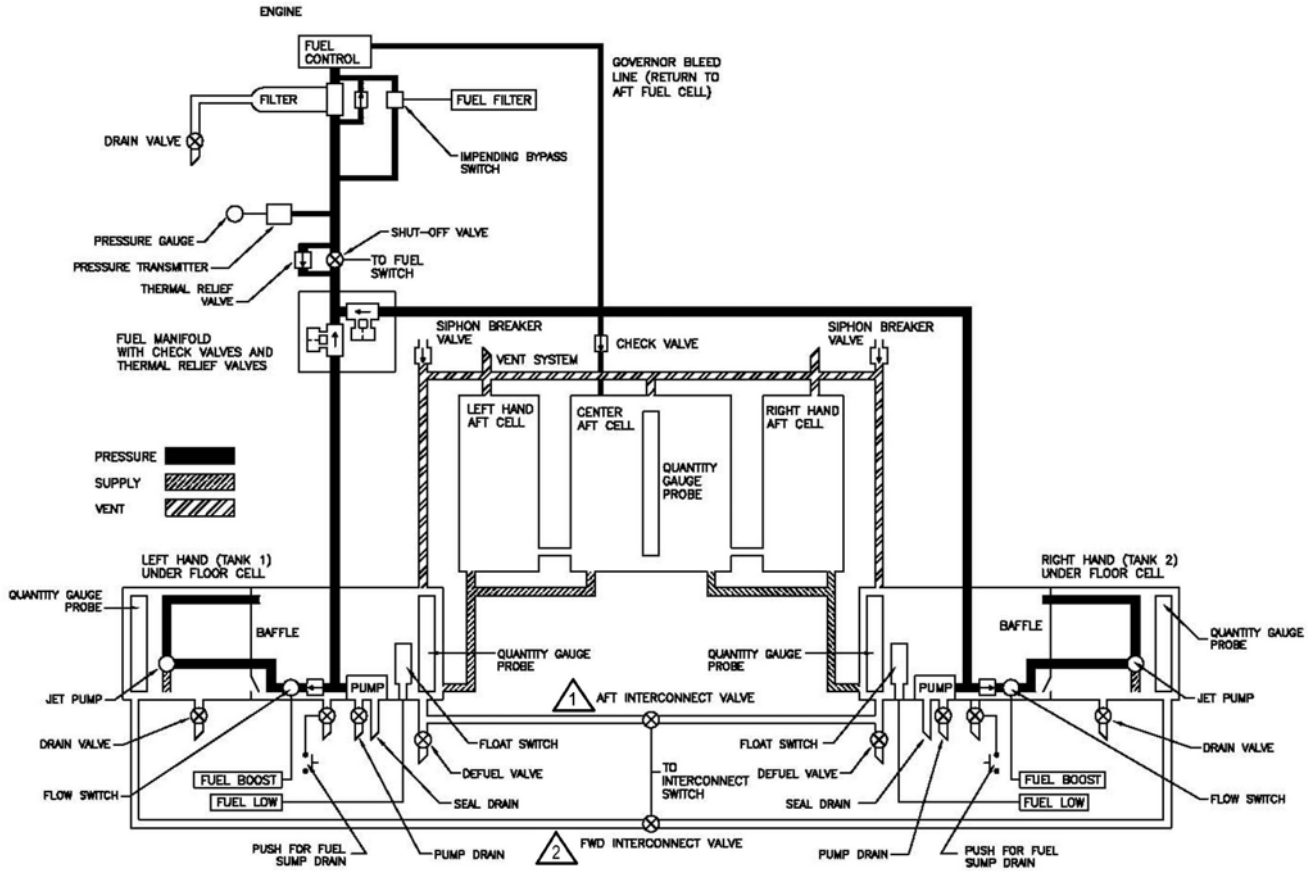

1 May have been replaced by D212-725-1-271 Fitting per DSB-D212-725-4

2 May have been replaced by D212-725-1-273 Hose Assembly per DSB-D212-725-4

Figure 28-2. Eagle 'S' Fuel System Schematic

• COPYRIGHT © 2007 BY DART AEROSPACE LTD. •
THIS DOCUMENT IS PRIVATE AND CONFIDENTIAL AND IS SUPPLIED ON THE EXPRESS CONDITION THAT IT IS NOT TO BE USED FOR ANY PURPOSE OR COPIED OR COMMUNICATED TO ANY OTHER PERSON WITHOUT WRITTEN PERMISSION FROM DART AEROSPACE LTD.

28.5 TROUBLESHOOTING FUEL SYSTEM

Table 28-2. Troubleshooting fuel system.

INDICATION OF TROUBLE	PROBABLE CAUSE	CORRECTIVE ACTION
FUEL FILTER caution panel segment illuminated.	Fuel filter is dirty.	Replace filter. If frequent filter changes are required, investigate fuel source.
FUEL BOOST caution panel segment illuminated.	Obstructed pump line through flow switch and ejector pump.	Clean screen in pump outlet fitting or replace flow switch or ejector pump or obstructed hoses.
	No electrical power to pump.	Repair wiring or replace faulty units in circuit.
	Defective boost pump.	Replace pump.
Shutoff valve inoperative.	Valve faulty or lacking electrical power.	Repair circuit or replace valve.
Engine fuel pump warning light illuminated.	One of the two pressure switches mounted on the engine adjacent to the fuel pump is faulty.	Check switches and replace faulty switch.
	One of the two engine driven fuel pumps is faulty.	Replace engine-driven fuel pump.
FUEL LOW caution panel segment when fuel is not low or fails to illuminate when fuel is low.	Defective float switch or wiring.	Replace float switch. Repair wiring.
FUEL LOW caution panel segment when fuel is above 10% fuel remaining (of basic fuel system) Approximately 150 pounds total, 75 pounds each side.	Lower fuel cell flapper valves.	Check flapper valves for correct installation and operation. Replace flapper valves if defective.

• COPYRIGHT © 2007 BY DART AEROSPACE LTD. •
THIS DOCUMENT IS PRIVATE AND CONFIDENTIAL AND IS SUPPLIED ON THE EXPRESS CONDITION THAT IT IS NOT TO BE USED FOR ANY PURPOSE OR COPIED OR COMMUNICATED TO ANY OTHER PERSON WITHOUT WRITTEN PERMISSION FROM DART AEROSPACE LTD.

28.6 OPERATIONAL CHECK

For operational check of fuel system components and indicators, refer to Chapter 96.

28.7 PRESSURE TESTING

28.7.1 Cap main fuel line and vent connections.

CAUTION

ENSURE FUEL CELL ACCESS PANELS ARE INSTALLED PRIOR TO APPLYING INFLATION PRESSURE.

28.7.2 Use regulated low-pressure, filtered, compressed air source or nitrogen with manometer or accurate pressure gage and a shutoff valve.

CAUTION

DO NOT APPLY MORE THAN 1.0 PSIG (6.9 kPa) PRESSURE TO FUEL SYSTEM. SEVERE DAMAGE TO CELL AND STRUCTURE MAY RESULT.

28.7.3 Apply pressure until gage indicates 0.5 to 1.0 psig (3.5 to 6.9 kPa) in cells and crossover tubes. Shut off air source. Verify pressure does not decrease after 15 minutes.

28.7.4 If leakage is detected, apply a soap and water solution to all repaired areas and to any other areas suspected of leaking. Repair leaks and repeat pressure test until no leaks are indicated.

28.7.5 Upon satisfactory completion of tests, remove all soap residue and remove all caps and plugs used to close off system if test results are satisfactory.

28.8 FORWARD FUEL CELLS

Two fuel cells are located under the cabin floor outboard of B.L.14 main longitudinal beams, between F.S. 102 and 155. Cells are laminated fabric and rubber self-sealing type, with molded-type metal fittings at openings, and passages for internal components and hoses. Each cell has a vent port on upper inboard side, interconnection ports on forward and aft ends, a drain port, and a large opening for sump assembly on lower side. A baffle divides each cell into forward and aft compartments and has a directional flow flapper valve. The sump opening provides access to the aft compartment. A slit in upper surface may be used for access to the forward compartment. Cells are suspended in fuselage cavities by nylon cord laced between hangers on cells and on structure. Each cell has threaded inserts on inboard wall for attachment of two fuel quantity gage probes.

Each sump assembly is equipped with an electrically operated boost pump, an outlet cross-fitting, check valve, flow-actuated switch, drain valve, de-fueling valve, low-level float switch, and connectors for fuel quantity gage probes.

28.8.1 Removal

NOTE

Removal procedure is same for either left or right forward fuel cell.

CAUTION

DO NOT HANDLE CELL WHEN CELL TEMPERATURE IS BELOW 65°F (18°C).

28.8.1.1 Disconnect and remove all electrical power from helicopter.

28.8.1.2 De-fuel and purge system (Chapter 12).

28.8.1.3 Remove cabin floor panels and lower skin doors for access to forward fuel cell cavities and connections.

• COPYRIGHT © 2007 BY DART AEROSPACE LTD. •
THIS DOCUMENT IS PRIVATE AND CONFIDENTIAL AND IS SUPPLIED ON THE EXPRESS CONDITION THAT IT IS NOT TO BE USED FOR ANY PURPOSE OR COPIED OR COMMUNICATED TO ANY OTHER PERSON WITHOUT WRITTEN PERMISSION FROM DART AEROSPACE LTD.

28.8.1.4 Disconnect electrical wiring between cabin structure and fuel cell sump components: Boost pump, flow switch, sump drain valve, and quantity gage circuit connectors.

28.8.1.5 Disconnect de-fueling valve crossover (18, Figure 28-3) at flange.

28.8.1.6 Remove 12 bolts around base plate of sump assembly (19). Lower sump base enough to reach through opening. Disconnect hoses at inboard sides of pump (17) outlet cross fitting and flow switch (20). Disconnect quantity probe wires from connectors on inside of sump assembly (19). Remove sump assembly and packing.

28.8.1.7 Disconnect fuel pressure hose (8) at outlet elbow on crossover assembly at aft end of cell. Disconnect crossover tubes (12) at F.S. 166 bulkhead and at clamped connection to capped auxiliary fuel provision (10). Remove bolts to detach flange of crossover assembly (9) from cell port. Remove crossover assembly with fuel pressure hose attached on inner side.

28.8.1.8 Remove bolts to detach forward drain valve and plate assembly and packing.

28.8.1.9 Disconnect hose from vent fitting (4). Remove nuts, two bolts, vent fitting, and packing.

28.8.1.10 Remove two pairs of bolts from inboard side of B.L. 14 beam at F.S. 119.82 and 144.82.

28.8.1.11 Remove 12 bolts and access bar (2) to open access slit in top of forward compartment of cell.

28.8.1.12 Remove two bolts to detach ejector pump (23) from cross-feed port in forward end of cell.

28.8.1.13 At front of F.S. 102 bulkhead, loosen clamp and detach hose from cross-feed fitting. Disconnect forward interconnect tube from fitting. Remove nut, washer, packing, and fitting.

28.8.1.14 Remove support cord from hangers around top of cell and cavity.

NOTE

Steps 28.8.1.15 and 28.8.1.16 can optionally be postponed until after removal of cell, or omitted if cell is not to be replaced.

28.8.1.15 Disconnect hose (16) at union on front of cell divider. Detach hose support clamps at quantity gage probe and in vent port. Remove ejector pump (23) with attached hoses.

28.8.1.16 Remove two quantity gage probes (7) with attaching clamps and bolts.

28.8.1.17 Lift fuel cell (1) from cavity.

28.8.1.18 Remove flapper valve (paragraph 28-43).

28.8.1.19 Install protective caps plugs in open fuel lines and over cell openings.

• COPYRIGHT © 2007 BY DART AEROSPACE LTD. •
THIS DOCUMENT IS PRIVATE AND CONFIDENTIAL AND IS SUPPLIED ON THE EXPRESS CONDITION THAT IT IS NOT TO BE USED FOR ANY PURPOSE OR COPIED OR COMMUNICATED TO ANY OTHER PERSON WITHOUT WRITTEN PERMISSION FROM DART AEROSPACE LTD.

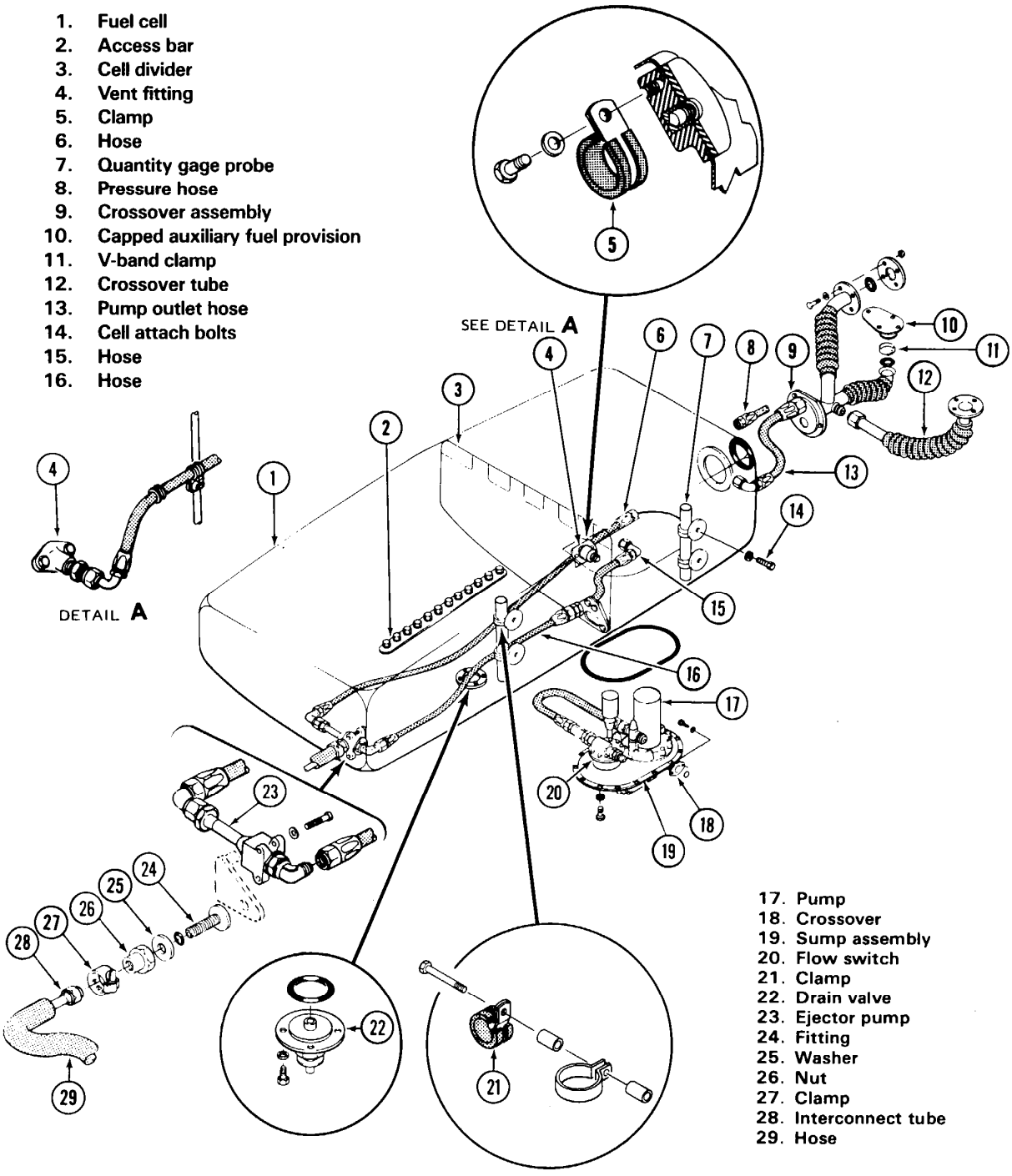

Figure 28-3. Forward fuel cell

• COPYRIGHT © 2007 BY DART AEROSPACE LTD. •
THIS DOCUMENT IS PRIVATE AND CONFIDENTIAL AND IS SUPPLIED ON THE EXPRESS CONDITION THAT IT IS NOT TO BE USED FOR ANY PURPOSE OR COPIED OR COMMUNICATED TO ANY OTHER PERSON WITHOUT WRITTEN PERMISSION FROM DART AEROSPACE LTD.

28.8.2 Cleaning

MATERIALS REQUIRED

NUMBER	NOMENCLATURE
C-302	Methyl Alcohol

CAUTION

WHEN USING HOT WATER TO CLEAN FUEL CELL, WATER TEMPERATURE SHALL BE LIMITED TO 160°F (71°C). DO NOT USE SOAPS OR STRONG DETERGENTS WHEN CLEANING CELL. SOAPS CAN REACT WITH FUEL TO FORM A COMPOUND WHICH TENDS TO PLUG FILTERS. DO NOT USE METHYL-ETHYL-KETONE (MEK) OR SIMILAR SOLVENTS FOR CLEANING CELLS.

28.8.2.1 Remove all fungus growth from cell by hand or with soft scrub brush using warm or hot water.

28.8.2.2 If fungus is observed in cell cavity, wipe cavity with clean cloths moistened with methyl alcohol (C-302).

28.8.2.3 Inspect other cells for presence of fungus growth. Remove any affected cell and clean as required.

28.8.3 Inspection

28.8.3.1 Inspect cells for cracks, scuffing, and general condition.

28.8.3.2 Inspect threaded inserts for serviceability. Inserts with thread damage which can be detected visually shall be replaced.

28.8.3.3 Check drain valves for evidence of leaks.

28.8.3.4 Check electrical connections for conditions.

28.8.3.5 Inspect hoses for damage and deterioration. Hoses exhibiting damage or deterioration which can be detected visually shall be replaced.

28.8.3.6 Inspect any removed components for serviceability.

28.8.4 Installation

MATERIALS REQUIRED

NUMBER	NOMENCLATURE
C-311	Adhesive
C-408	Talcum Powder
C-480	Nylon Cord

Leave fuel cell in original shipping container until ready to install in helicopter.

CAUTION

DO NOT HANDLE FUEL CELLS WHEN TEMPERATURE OF CELL IS BELOW 65°F (18°C).

28.8.4.1 Inspect cell cavity for clean, smooth condition of surfaces.

28.8.4.2 Liberally apply talcum powder (C-408) to cavity surfaces.

28.8.4.3 Remove protective caps, plugs, and covers.

NOTE

Installation procedure is same for either left or right forward fuel cell. Steps 4 through 7 for installation of internal components may optionally be postponed until after cell is placed in cavity.

28.8.4.4 Install flapper valve, if removed (paragraph 28-46).

28.8.4.5 Place ejector pump (23, Figure 28-3), with attached hoses, into forward compartment of cell (1) with hose (6) outboard. Connect hose (15) to union on flapper valve assembly. Insert end of hose (6) through opening above cell divider at inboard side and attach hose support clamp with bolt and thin aluminum alloy washer to threaded insert at

• COPYRIGHT © 2007 BY DART AEROSPACE LTD. •
THIS DOCUMENT IS PRIVATE AND CONFIDENTIAL AND IS SUPPLIED ON THE EXPRESS CONDITION THAT IT IS NOT TO BE USED FOR ANY PURPOSE OR COPIED OR COMMUNICATED TO ANY OTHER PERSON WITHOUT WRITTEN PERMISSION FROM DART AEROSPACE LTD.

cell vent port.

28.8.4.6 Position quantity gage probe (7) with support clamps to threaded inserts on inboard wall of forward compartment. Secure lower clamp with bolt and thin aluminum washer. Install upper bolt through support clamp on hose (6), and through spacer and probe clamp to cell inserts.

28.8.4.7 Position quantity gage probe (7) with support clamps to threaded inserts on inboard wall of rear compartment. Secure lower clamp with bolt and thin aluminum alloy washer. Install upper bolt through a thin aluminum washer, probe clamp, and spacer to cell insert.

28.8.4.8 Inspect cavity under cabin floor for clean, smooth condition of surfaces. Brush talcum powder (C-408) to cavity surface to prevent cell adhesion.

28.8.4.9 Place packings in grooves around sump port, aft outlet port, and forward drain port. Use adhesive (C-311) as required to hold packings in place during cell installation.

28.8.4.10 Place fuel cell (1) into cavity.

28.8.4.11 Align forward drain port to mounting holes. With packing in place, install drain valve and plate assembly with four bolts and thin aluminum washers. Torque bolts 40 to 50 in-lbs. (4.52 to 5.65 Nm).

28.8.4.12 Align two pairs of threaded inserts on inboard side of cell to mounting holes through B.L. 14 beam at F.S. 119.82 and 144.82. Install bolts, with thin aluminum washers, from inboard side of beam.

28.8.4.13 Install fitting and packing on cell vent port with two bolts and thin aluminum washers. Insert through beam and install nut. Connect vent hose.

28.8.4.14 Align forward cross-feed port of cell to hole in F.S. 102 bulkhead. Insert fitting from inside cell, and install packing, washer, and nut at front of bulkhead. Connect forward interconnect tube to fitting. Attach hose on nut with clamp.

28.8.4.15 Position ejector pump (23) over inner end of cross-feed fitting. Install two bolts, with washers under heads, through pump housing into threaded inserts of cell.

28.8.4.16 Install crossover assembly (9) to aft outlet port of cell as follows:

28.8.4.16.1 Check boost pump outlet hose (13) connected on inner side of crossover.

28.8.4.16.2 Align cell aft outlet port to mounting holes of cavity aft bulkhead, with packing in place.

28.8.4.16.3 Insert hose into cell, position crossover mounting flange, and install six bolts with thin aluminum washers. Torque bolts 40 to 50 in-lbs. (4.52 to 5.65 Nm).

28.8.4.16.4 Connect auxiliary fuel line to capped fitting with packing and V-band clamp.

28.8.4.16.5 Connect main fuel hose to below on crossover.

28.8.4.16.6 Connect aft cell line at F.S. 166 bulkhead with packing and four bolts with thin aluminum washers.

28.8.4.16.7 On right cell, also connect center cell crossover and check installation of cap on upper and lower inboard fittings of crossover assembly.

28.8.4.17 Install access bar (2) and twelve bolts with thin aluminum washers to close access slit on upper surface of cell.

28.8.4.18 Lace and tie a single length of nylon cord (C-480) between hangers around top of cell and cavity (Figure 28-4).

28.8.4.19 Install sump assembly (19, Figure 28-3) as follows:

28.8.4.19.1 With packing in place, hold sump assembly slightly below cell port.

28.8.4.19.2 Connect hose (15) from union on flapper valve plate to outlet elbow on flow switch (20).

• COPYRIGHT © 2007 BY DART AEROSPACE LTD. •
THIS DOCUMENT IS PRIVATE AND CONFIDENTIAL AND IS SUPPLIED ON THE EXPRESS CONDITION THAT IT IS NOT TO BE USED FOR ANY PURPOSE OR COPIED OR COMMUNICATED TO ANY OTHER PERSON WITHOUT WRITTEN PERMISSION FROM DART AEROSPACE LTD.

28.8.4.19.3 Connect pump outlet hose (13) from aft outlet crossover to inboard elbow on boost pump outlet cross fitting.

28.8.4.19.4 Connect wires from forward and aft quantity gage probes to connectors on inside of sump base plate.

28.8.4.19.5 Raise sump assembly (19) to position. Install twelve bolts with thin aluminum washers. Torque bolts 40 to 50 in-lbs. (4.52 to 5.65 Nm).

28.8.4.19.6 Connect electrical wires to terminal block and quantity gage circuit connectors.

28.8.4.19.7 Connect crossover (18) at mating flange of aft crossover hose with packing, two bolts, and thin aluminum washers.

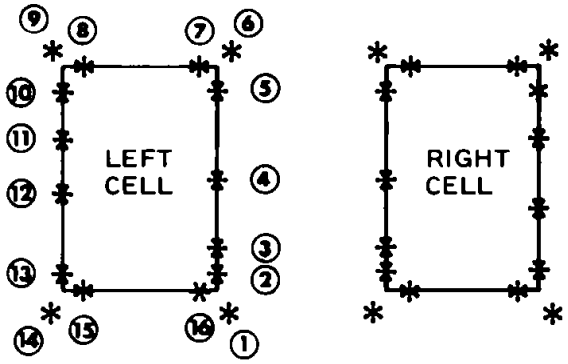

Figure 28-4. Forward fuel cell lacing

28.8.4.20 Install deck panels and access doors.

28.8.4.21 Pressure test system per paragraph 28-7.

28.9 AFT FUEL CELLS

Three aft cells are located in fuselage cavities aft of pylon support between engine deck and cabin floor levels. The center cell is inside the two B.L. 14 main structural beams, between bulkheads at F.S. 155 and 178. The left and right cells are outboard of the main beams, between F.S. 166 and 178. Cells are bladder type, of laminated fabric and synthetic rubber, with inserted metal flange-type fittings at openings and integral hangers around upper ends of nylon cord suspension in cavities. Side cells have interconnection ports on bottom and lower inboard sides, and a vent port on the top. The right cell has a filler port. The center cell has interconnection ports on bottom and lower outboard sides, and a large access door opening on the aft side. The access door provides mounting and electrical connections for fuel quantity gage probe, and has inlet fittings and check valves for engine governor bleed lines.

Refer to Auxiliary Fuel Tank Kits (BHT-212-SI-12) for complete information on seat type or extended range auxiliary fuel kits.

28.10 AFT OUTBOARD FUEL CELLS

28.10.1 Removal

MATERIALS REQUIRED

NUMBER	NOMENCLATURE
C-016	Lubricating Oil
C-428	Caps and/or Plugs

• COPYRIGHT © 2007 BY DART AEROSPACE LTD. •
THIS DOCUMENT IS PRIVATE AND CONFIDENTIAL AND IS SUPPLIED ON THE EXPRESS CONDITION THAT IT IS NOT TO BE USED FOR ANY PURPOSE OR COPIED OR COMMUNICATED TO ANY OTHER PERSON WITHOUT WRITTEN PERMISSION FROM DART AEROSPACE LTD.

CHAPTER 28 – FUEL SYSTEM (28-00-00)

CAUTION

DO NOT HANDLE FUEL CELL WHEN CELL TEMPERATURE IS BELOW 65°F (18°C).

NOTE

When a cell which has contained fuel is to remain empty for more than three days, fog inner surface of cell with light lubricating oil (C-016) to prevent deterioration caused by drying out. Do not leave cell collapsed. If cell is not to be replaced in the helicopter immediately, place cell in a stand or a container such as is normally used for shipping. Restore cell to normal shape.

28.10.1.1 Disconnect and remove all electrical power from helicopter.

28.10.1.2 Remove aft outboard left cell as follows:

28.10.1.2.1 De-fuel and purge system (Chapter 12).

28.10.1.2.2 Remove deck panel above left cell (17, Figure 28-5).

28.10.1.2.3 Disconnect vent line (14) from reducer tee (8) and from cross fitting in center cell cavity. Detach grommet (15) from beam and move vent line clear of side cell cavity.

28.10.1.2.4 Remove four bolts and washers to detach elbow (5), plate (6), and packing (7) from vent port of left cell. Remove four screws and washers to detach bracket (16) from aft bulkhead of compartment.

28.10.1.2.5 At underside of cell, remove bolts and washers to detach crossover fitting (25) and packing from cell port.

28.10.1.2.6 Remove door (20) as follows:

28.10.1.2.6.1 Disconnect governor bleed line (22) from check valve (21) on door (20) and from fitting at underside of engine deck. Cap fittings.

28.10.1.2.6.2 Disconnect electrical wiring from two quantity gage connectors (23) and terminal block (24) on door.

28.10.1.2.6.3 Remove bolts and washers around edge of door (20). Carefully remove door, packing (19), and quantity gage probe (18).

28.10.1.2.7 Remove interconnect fitting (26).

28.10.1.2.8 Remove cord lacing around top of cell.

28.10.1.2.9 Lift cell from cavity.

28.10.1.2.10 Cover cell openings and cap or plug open lines (C-428).

28.10.1.3 Remove aft outboard right cell as follows:

28.10.1.3.1 Ensure sub-step 28.10.1.2.1 has been accomplished. Remove deck lid above right fuel cell.

28.10.1.3.2 Remove cap and adapter (1) from filler port.

28.10.1.3.3 Disconnect vent line (9) from reducer tee (8) and from cross fitting in center cell cavity. Remove grommet (10) from beam and move vent line clear of fuel cell cavity.

28.10.1.3.4 Remove four bolts and washers to detach elbow (5), plate (6), and packing (7) from vent port. Discard packing.

28.10.1.3.5 At underside of cell, remove bolts and washers and remove crossover fitting (30) and packing from fuel cell port. Discard packing.

28.10.1.3.6 Remove door (20) (sub-step 28.10.1.2.6).

28.10.1.3.7 Remove interconnect fitting (29).

28.10.1.3.8 Remove cord lacing around top of fuel cell.

28.10.1.3.9 Lift cell from cavity.

28.10.1.3.10 Cover cell openings and cap or plug open lines (C-428).

• COPYRIGHT © 2007 BY DART AEROSPACE LTD. •
THIS DOCUMENT IS PRIVATE AND CONFIDENTIAL AND IS SUPPLIED ON THE EXPRESS CONDITION THAT IT IS NOT TO BE USED FOR ANY PURPOSE OR COPIED OR COMMUNICATED TO ANY OTHER PERSON WITHOUT WRITTEN PERMISSION FROM DART AEROSPACE LTD.

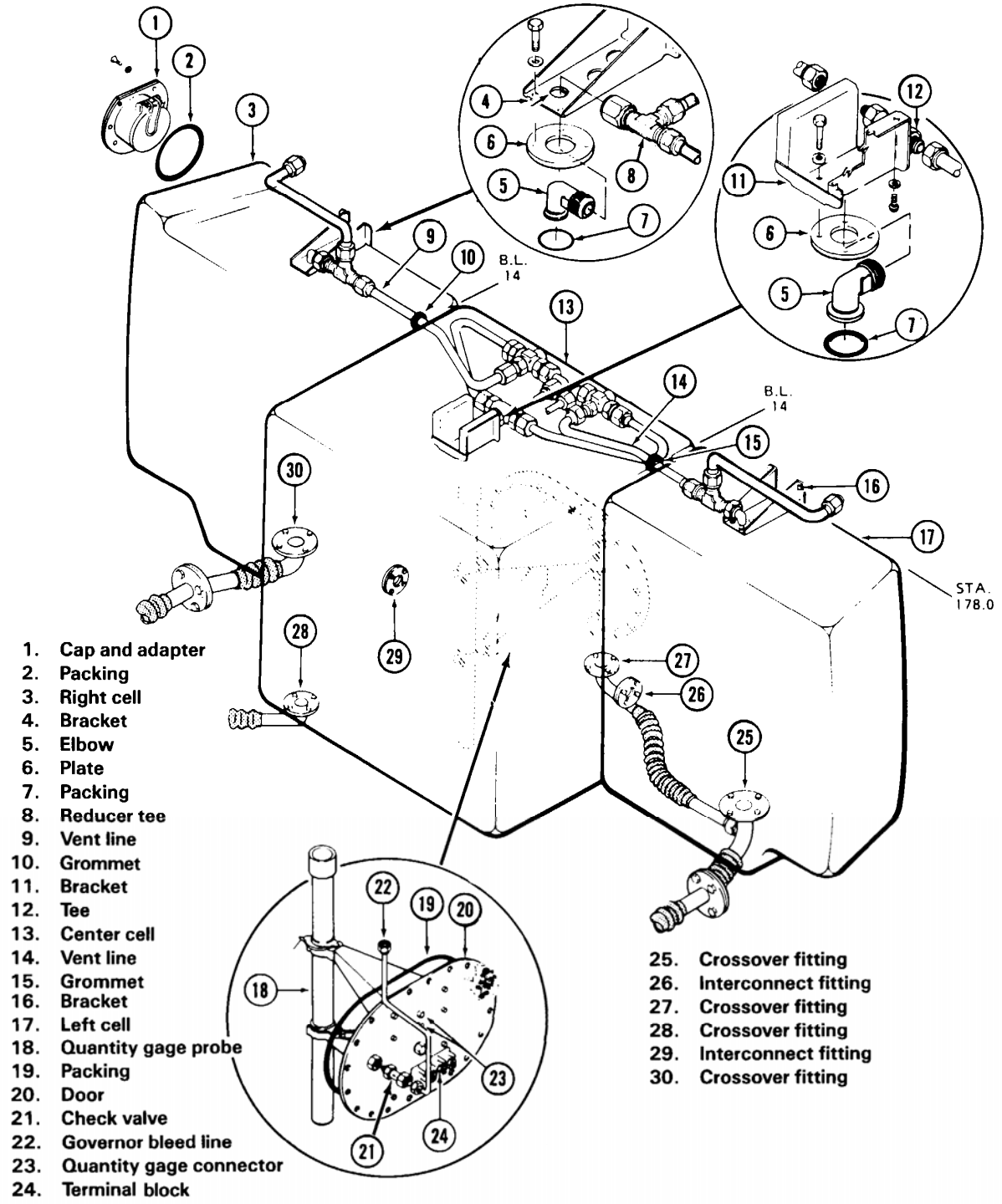

Figure 28-5. Aft fuel cell

• COPYRIGHT © 2007 BY DART AEROSPACE LTD. •
THIS DOCUMENT IS PRIVATE AND CONFIDENTIAL AND IS SUPPLIED ON THE EXPRESS CONDITION THAT IT IS NOT TO BE USED FOR ANY PURPOSE OR COPIED OR COMMUNICATED TO ANY OTHER PERSON WITHOUT WRITTEN PERMISSION FROM DART AEROSPACE LTD.

28.10.2 Cleaning

MATERIALS REQUIRED

NUMBER	NOMENCLATURE
C-339	Ethyl Alcohol

CAUTION

WHEN USING HOT WATER TO CLEAN FUEL CELL, WATER TEMPERATURE SHALL BE LIMITED TO 160°F (71°C). DO NOT USE SOAPS OR STRONG DETERGENTS WHEN CLEANING CELL. SOAPS CAN REACT WITH FUEL TO FORM A COMPOUND WHICH TENDS TO PLUG FILTERS. DO NOT USE METHYL-ETHYL-KETONE (MEK) OR SIMILAR SOLVENTS FOR CLEANING CELLS.

28.10.2.1 Remove all fungus growth from cell by hand or with soft scrub brush using warm or hot water.

28.10.2.2 If fungus is observed in cell cavity, wipe cavity with clean cloths moistened with ethyl alcohol (C-339).

28.10.2.3 Inspect other cells for presence of fungus growth. Remove any affected cell and clean as required.

28.10.3 Inspection

28.10.3.1 Inspect fuel cell for cracks and scuffing. Replace cells if unserviceable.

28.10.3.2 Inspect all fittings and ensure serviceability of threaded inserts. Replace if unserviceable.

28.10.4 Installation

MATERIALS REQUIRED

NUMBER	NOMENCLATURE
C-311	Adhesive
C.408	Talcum Powder
C-471	Lacing Cord

CAUTION

DO NOT HANDLE FUEL CELL WHEN CELL TEMPERATURE IS BELOW 65°F (18°C).

LEAVE FUEL CELL IN ORIGINAL SHIPPING CONTAINER UNTIL READY TO INSTALL IN HELICOPTER.

NOTE

Work-aids to align fuel cell fittings during installation may be fabricated by cutting off heads of two AN4 bolts approximately 6 in. (15.24 cm) long. Grind cutoff ends to bullet shape, removing any burrs. Install work-aids in two nut-plates of fuel cell port being attached, and use work-aids to hold alignment with mating parts while starting prescribed attaching bolts into remaining nut plates. Ensure attaching bolts are correct thread size and length: Bolts too short will not have enough thread engagement; bolts too long will bottom out and cause incorrect torque, possible damage to nut plate, and fuel leakage.

28.10.4.1 Inspect fuel cell cavity for cleanliness and smooth condition of all interior surfaces. Apply talcum powder (C-408) to cavity to prevent cell adhesion.

28.10.4.2 Install aft outboard left cell as follows:

28.10.4.2.1 Place packings in grooves of interconnect, crossover, and vent port fittings. Secure packings in place with a fuel soluble adhesive (0-311) or equivalent.

28.10.4.2.2 Insert fuel cell into cavity. Use care to avoid damage to fuel cell.

NOTE

Fuel tank assemblies 212-360-602-101 (left side) and 212-360-602-102 (right side) do not have lacing rings. Vent, interconnect, and filler fitting attachments will support tank position in airframe structure after installation.

28.10.4.2.3 Lace fuel cell in position using a single

• COPYRIGHT © 2007 BY DART AEROSPACE LTD. •
THIS DOCUMENT IS PRIVATE AND CONFIDENTIAL AND IS SUPPLIED ON THE EXPRESS CONDITION THAT IT IS NOT TO BE USED FOR ANY PURPOSE OR COPIED OR COMMUNICATED TO ANY OTHER PERSON WITHOUT WRITTEN PERMISSION FROM DART AEROSPACE LTD.

length of lacing cord (C-471). Lace as shown on Figure 28-6.

28.10.4.2.4 Align bottom ports of cells to mounting points in floors of cavities, using work-aids as required. With packings in place, attach crossover fitting (25, Figure 28-5) with four bolts and thin aluminum washers. Torque bolts 40 to 50 in-lbs. (4.52 to 5.65 Nm).

28.10.4.2.5 At top of left aft cell; assemble packing (7), plate (6), elbow (5), pointing inboard, and bracket (16), with attachment legs aft, with four bolts

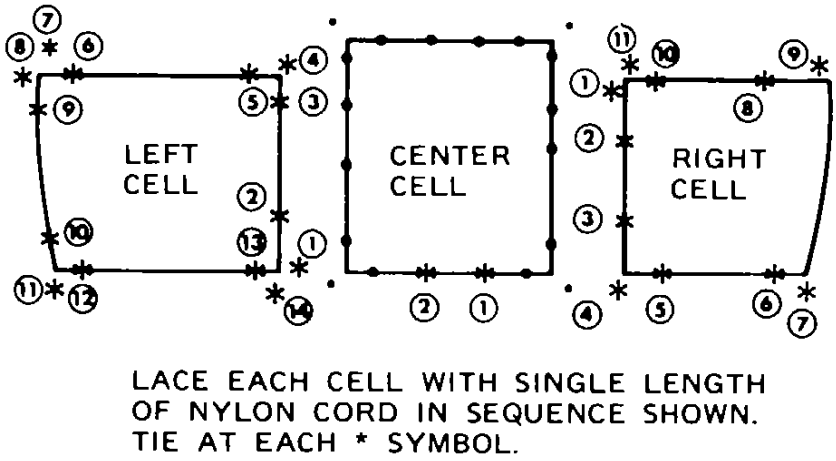

Note: Lacing does not apply to fuel tank assemblies 212-360-602 and 212-360-603

Figure 28-6. Tying Sequence — aft fuel cell

and thin aluminum washers. Torque bolts 40 to 50 in-lbs (4.52 to 5.65 Nm). Attach each bracket to aft bulkhead inserts with four screws and thin aluminum washers.

28.10.4.2.6 Connect vent line (14) between reducer tee (8) and aft nipples of cross fittings in top of center cell cavity, using grommet (15) where vent line passes through B.L. 14 beam.

28.10.4.2.7 Place packings in grooves of interconnect fitting (26) using fuel soluble adhesive (C-311), to keep packing in place. Ensure packings are also in place on mating fitting. Using work-aids as required, align interconnect fitting and secure with bolts and thin aluminum washers installed from inside of center cell. Torque bolts 40 to 50 in-lbs. (4.52 to 5.65 Nm).

28.10.4.2.8 Install deck above fuel cell.

28.10.4.2.9 Pressure test system per paragraph 28.7

28.10.4.3 Install aft outboard right cell as follows:

28.10.4.3.1 Place packings in grooves of interconnect crossover, vent, and fuel filler port fittings. Secure packings in place with a fuel soluble adhesive (C-311) or equivalent.

28.10.4.3.2 Insert fuel cell into cavity. Use care to avoid damage to fuel cell.

• COPYRIGHT © 2007 BY DART AEROSPACE LTD. •
THIS DOCUMENT IS PRIVATE AND CONFIDENTIAL AND IS SUPPLIED ON THE EXPRESS CONDITION THAT IT IS NOT TO BE USED FOR ANY PURPOSE OR COPIED OR COMMUNICATED TO ANY OTHER PERSON WITHOUT WRITTEN PERMISSION FROM DART AEROSPACE LTD.

NOTE

Fuel tank assemblies 212-360-602-101 (left side) and 212-360-602-102 (right side) do not have lacing rings. Vent, interconnect, and filler fitting attachments will support tank position in airframe structure after installation.

28.10.4.3.3 Lace fuel cell in position using a single length of lacing cord (C-471). Lace as shown on Figure 28-6.

28.10.4.3.4 Align bottom ports of cells to mounting points in floors of cavities, using work-aids as required. With packings in place, attach each crossover fitting (30, Figure 28-5) with four bolts and thin aluminum washers. Torque bolts 40 to 50 in-lbs. (4.52 to 5.65 Nm).

28.10.4.3.5 At top of right aft cell; assemble packing (7), plate (6), elbow (5), pointing inboard, and bracket (4), with attachment legs aft, with four bolts and thin aluminum washers. Torque bolts 40 to 50 in-lbs. (4.52 to 5.65 Nm). Attach each bracket to aft bulkhead inserts with four screws and thin aluminum washers.

28.10.4.3.6 Connect vent line (9) between elbow and aft nipples of cross fittings in top of center cell cavity, using grommet (10) where vent line passes through B.L. 14 beam.

28.10.4.3.7 Place packings in grooves of interconnect fittings (29), using fuel soluble adhesive (0-311) to keep packings in place. Ensure packings are also in place on mating fittings of right and left aft cells. Using work-aids as required, align each interconnect fitting and secure with bolts and thin aluminum washers installed from inside of center cell. Torque bolts 40 to 50 in-lbs. (4.52 to 5.65 Nm).

28.10.4.3.8 Align filler port to mounting point of outer skin panel. With packing (2) in place, position cap and adapter (1) with trimmed edge up. Install bolts with thin aluminum washers, picking up riveted ground strip on forward upper bolt. Torque bolts 40 to 50 in-lbs. (4.52 to 5.65 Nm).

28.10.4.3.9 Install deck above fuel cell.

28.10.4.3.10 Pressure test fuel system per paragraph 28.7.

28.10.4.4 Place packing (19) in groove around center cell access port. Hold door assembly (20) near opening, with brackets extending into cell. Position quantity gage probe (18) in clips on brackets, securing with tie at upper clip. Connect probe electrical leads to connectors on inside of door. Align door and install twenty bolts with thin aluminum alloy washers. Torque bolts 40 to 50 in-lbs. (4.52 to 5.65 Nm).

28.11 AFT CENTER CELL

28.11.1 Removal

MATERIALS REQUIRED

NUMBER	NOMENCLATURE
C-016	Lubricating Oil
C-428	Caps and/or Plugs

CAUTION

DO NOT HANDLE FUEL CELL WHEN CELL TEMPERATURE IS BELOW 65°F (18°C).

NOTE

When a cell which has contained fuel is to remain empty for more than three days, lightly fog inner surface with lubricating oil (C-016) to prevent deterioration caused by drying out. Do not leave the cell collapsed. If cell is not to be replaced in helicopter immediately, install cell in a stand or a container such as is normally used for shipping. Restore cell to normal shape.

28.11.1.1 De-fuel and purge system (Chapter 12).

28.11.1.2 Disconnect and remove all electrical power from helicopter.

28.11.1.3 Disconnect two governor bleed lines (22, Figure 28-5) from check valves (21) on door (20) and from fittings at underside of engine deck. Cap fittings.

• COPYRIGHT © 2007 BY DART AEROSPACE LTD. •
THIS DOCUMENT IS PRIVATE AND CONFIDENTIAL AND IS SUPPLIED ON THE EXPRESS CONDITION THAT IT IS NOT TO BE USED FOR ANY PURPOSE OR COPIED OR COMMUNICATED TO ANY OTHER PERSON WITHOUT WRITTEN PERMISSION FROM DART AEROSPACE LTD.

28.11.1.4 Disconnect electrical wiring from two quantity gage connectors (23) and terminal block (24) on door.

28.11.1.5 Remove bolts and washers around edge of door (20). Carefully remove door, packing (19), and quantity gage probe (18).

28.11.1.6 Working from inside center cell (13), remove bolts and washers to detach both interconnect fittings (26 and 29).

28.11.1.7 Untie and unlace support cord from hangers around aft upper edge of center cell to allow access to vent connections above cell.

28.11.1.8 Disconnect vent lines from tee (12). Remove four screws and washers to detach bracket (11) from underside of engine deck. Remove four bolts and washers to detach bracket, elbow (5), plate (6), and packing (7), from vent port of center cell.

28.11.1.9 At underside of center cell cavity, remove bolts and washers to detach crossover fittings (27 and 28) and packings from ports of center cell.

28.11.1.10 Remove cord lacing and collapse center cell folding and securing with suitable webbing straps into a bundle, and withdraw cell aft through door opening. Restore cell to normal shape after removal.

28.11.1.11 Cover cell openings and cap open lines with caps and/or plugs (C-428).

28.11.2 Cleaning

MATERIALS REQUIRED

NUMBER	NOMENCLATURE
C-339	Ethyl Alcohol

CAUTION

WHEN USING HOT WATER TO CLEAN FUEL CELL, WATER TEMPERATURE SHALL BE LIMITED TO 160°F (71°C). DO NOT USE SOAPS OR STRONG DETERGENTS WHEN CLEANING CELL. SOAPS CAN REACT WITH FUEL TO FORM A COMPOUND WHICH TENDS TO PLUG FILTERS. DO NOT USE METHYL-ETHYL-KETONE (MEK) OR SIMILAR SOLVENTS FOR CLEANING CELLS.

28.11.2.1 Remove all fungus growth from cell by hand or with soft scrub brush using warm or hot water.

28.11.2.2 If fungus is observed in cell cavity, wipe cavity with clean cloths moistened with ethyl alcohol (C-339).

28.11.2.3 Inspect other cells for presence of fungus growth. Remove any affected cell and clean as required.

28.11.3 Inspection

28.11.3.1 Inspect fuel cell for cracks and scuffing. Replace cell if unserviceable.

28.11.3.2 Inspect threaded inserts for damaged threads. Damage which can be detected visually is not acceptable. Replace insert if unserviceable.

28.11.4 Installation

MATERIALS REQUIRED

NUMBER	NOMENCLATURE
C-311	Adhesive
C-408	Talcum Powder
C-471	Lacing Cord

CAUTION

DO NOT HANDLE FUEL CELL WHEN CELL TEMPERATURE IS BELOW 65°F (18°C).

LEAVE FUEL CELL IN ORIGINAL SHIPPING CONTAINER UNTIL READY TO INSTALL IN HELICOPTER.

NOTE

Work-aids to align fuel cell fittings during installation

• COPYRIGHT © 2007 BY DART AEROSPACE LTD. •
THIS DOCUMENT IS PRIVATE AND CONFIDENTIAL AND IS SUPPLIED ON THE EXPRESS CONDITION THAT IT IS NOT TO BE USED FOR ANY PURPOSE OR COPIED OR COMMUNICATED TO ANY OTHER PERSON WITHOUT WRITTEN PERMISSION FROM DART AEROSPACE LTD.

may be fabricated by cutting off heads of two AN4 bolts approximately 6 in. (15.24 mm) long. Grind cutoff ends to bullet shape, removing any burrs. Install work-aids in two nut-plates of fuel cell port being attached, and use work-aids to hold alignment with mating parts while starting prescribed attaching bolts into remaining nut plates. Ensure attaching bolts are correct thread size and length: Bolts too short will not have enough thread engagement; bolts too long will bottom out and cause incorrect torque, possible damage to nut plate, and fuel leakage.

NOTE

Fuel cell 212-360-603-101 (center aft) does not have lacing rings. Existing vent and interconnect fittings attachment will support cell into position inside airframe structure after installation.

28.11.4.1 Remove caps or plugs from lines and openings.

28.11.4.2 Inspect fuel cell cavity for cleanliness and smooth condition of all interior surfaces. Apply talcum powder (C-408) to cavity to prevent cell adhesion.

28.11.4.3 Collapse center fuel cell, folding and securing with suitable webbing straps into a bundle which can pass through rear access door of cavity. Carefully insert cell into cavity, remove straps, and arrange in approximate position.

28.11.4.4 Place packings in grooves of two crossover ports in bottom of center cell, using fuel soluble adhesive (C-311), or equivalent, to hold packings in place. Using work-aids as required, position each port to mounting point in floor of cavity and attach crossover fittings (27 and 28, Figure 28-5) with bolts and thin aluminum washers. Torque bolts 40 to 50 in-lbs. (4.52 to 5.65 Nm).

28.11.4.5 Place packings in grooves of interconnect fittings (26 and 29), using adhesive (C-311) to keep packings in place. Ensure packings are also in place on mating fittings of right and left aft cells. Using work-aids as required, align each interconnect fitting and secure with bolts and thin aluminum washers installed from inside cell. Torque bolts 40 to 50 in-lbs. (4.52 to 5.65 Nm).

28.11.4.6 At vent port fitting in top of center cell, assembly packing (7), plate (6), elbow (5) with attached tee (12), and bracket (11) with four bolts and thin aluminum washers. Torque bolts 40 to 50 in-lbs. (4.52 to 5.65 Nm).

NOTE

Fuel tank assemblies 212-360-603-101 (center aft) does not have lacing rings. Vent and interconnect fitting attachments will support tank position in airframe structure after installation.

28.11.4.7 Lace single length of lacing cord (C-471) through hangers around upper forward area of center cell and cavity (Figure 28-6). Temporarily secure ends of cord, leaving enough slack for access to top of cell.

28.11.4.8 Align vent bracket (11, Figure 28-5) to inserts in top of cavity. Install four screws with thin aluminum washers. Connect vent tubes from two cross fittings to tee (12).

28.11.4.9 Complete lacing of support cord around top of center cell, and tie securely.

28.11.4.10 Place packing (19) in groove around center cell access port. Hold door (20) near opening, with brackets extending into cell. Position quantity gage probe (18) in clips on brackets securing with tie at upper clip. Connect probe electrical leads to connectors on inside of door. Align door and install twenty bolts with thin aluminum alloy washers. Torque bolts 40 to 50 in-lbs. (4.52 to 5.65 Nm).

28.11.4.11 Connect governor bleed line (22) from fitting under deck to check valve (21) on door. Connect electrical wiring to quantity gage connectors (23) and to terminal block (24) on door.

28.11.4.12 Install access panels and covers.

28.11.4.13 Perform pressure test of fuel system (paragraph 28.7).

• COPYRIGHT © 2007 BY DART AEROSPACE LTD. •
THIS DOCUMENT IS PRIVATE AND CONFIDENTIAL AND IS SUPPLIED ON THE EXPRESS CONDITION THAT IT IS NOT TO BE USED FOR ANY PURPOSE OR COPIED OR COMMUNICATED TO ANY OTHER PERSON WITHOUT WRITTEN PERMISSION FROM DART AEROSPACE LTD.

CHAPTER 28 – FUEL SYSTEM (28-00-00)

28.12 FUEL SUMP ASSEMBLY

Fuel cell sump assemblies are mounted in openings on the underside of each forward fuel tank. Removal of sump assemblies from the cells permits access for maintenance and replacement of the boost pump, flow switch, low fuel level warning switch, check valve, cross fitting, and sump drain valve. The boost pump and sump drain valves may be removed without removing sump assembly.

NOTE

Maintenance procedures are the same for both sump assemblies.

28.12.1 Removal

28.12.1.1 De-fuel and purge system (Chapter 12).

28.12.1.2 Disconnect electrical power.

28.12.1.3 Remove sump access door from fuselage lower skin.

28.12.1.4 Disconnect electrical leads at terminal block (22, Figure 28-7) and quantity gage connectors on sump base.

28.12.1.5 Disconnect crossover assembly (2) at flange secured by two bolts.

28.12.1.6 Remove 12 bolts around edge of sump base (3). Lower sump assembly enough to reach through opening. Disconnect hoses (5 and 13) from inboard side of pump outlet (8) and from union (12) in outlet of flow switch (11). Disconnect quantity probe wires from connectors (14). Remove sump assembly.

28.12.1.7 Cover fuel cell sump opening.

28.12.2 Inspection

28.12.2.1 Inspect area where sump mates with cell for damage and cleanliness. Inspect packing groove.

28.12.2.2 Inspect components for security of mounting.

28.12.2.3 Inspect hoses, unions, and fittings for contamination and thread damage. Thread damage which can be detected visually is not acceptable. Replace unserviceable part.

28.12.2.4 Inspect electrical leads and connectors for condition.

28.12.3 Installation

MATERIALS REQUIRED

NUMBER	NOMENCLATURE
C-024	Assembly Fluid

28.12.3.1 Remove protective covering from cell sump opening.

28.12.3.2 Place packing in groove around sump port of cell, using assembly fluid (C-024) to hold packing in place during installation.

28.12.3.3 Hold sump assembly slightly below cell port.

28.12.3.4 Connect hose (13, Figure 28-7) to union (12) in outlet of flow switch (11).

28.12.3.5 Connect hose (5) to inboard nipple of pump outlet (8).

28.12.3.6 Connect quantity probe wires to connectors (14).

28.12.3.7 Raise sump assembly to position. Install 12 bolts with thin aluminum washers. Torque bolts 40 to 50 in-lbs. (4.52 to 5.65 Nm).

28.12.3.8 Connect crossover assembly (2) to mating flange of aft crossover hose with packing and two bolts with thin aluminum washers.

28.12.3.9 Connect electrical wires at terminal block and quantity probe connectors on sump base (3).

• COPYRIGHT © 2007 BY DART AEROSPACE LTD. •
THIS DOCUMENT IS PRIVATE AND CONFIDENTIAL AND IS SUPPLIED ON THE EXPRESS CONDITION THAT IT IS NOT TO BE USED FOR ANY PURPOSE OR COPIED OR COMMUNICATED TO ANY OTHER PERSON WITHOUT WRITTEN PERMISSION FROM DART AEROSPACE LTD.

28.12.3.10 Perform pressure test (paragraph 28.7).

28.12.3.11 Install sump access door to fuselage lower skin.

28.12.3.12 Perform operational check of fuel quantity indicating system before servicing system (Chapters 95 and 96).

28.12.3.13 Service fuel system (Chapter 12).

28.12.3.14 Check area for leaks.

28.13 FLOW SWITCHES

Switches actuated by outlet flow from each boost pump are connected to caution panel lights to provide warning of interruption of pump output. A directional flow check valve is installed in each flow switch inlet, and the switch outlet is connected to the jet pump in forward end of cell.

28.13.1 Removal

28.13.1.1 Remove sump assembly (paragraph 28.25).

28.13.1.2 Disconnect flow switch (11, Figure 28-7) electrical leads from terminal block (22).

28.13.1.3 Disconnect flow line hose (9) from check valve (10), and flow hose (13) from union (12).

28.13.1.4 Remove retaining nut, washer, flow switch (11), and packing from sump base (3).

28.13.1.5 When flow switch (11) is being replaced, remove check valve (10), union (12), and packings. Cover open ports.

28.13.2 Installation

28.13.2.1 If installing a replacement flow switch (11, Figure 28-7) remove shipping plugs and install check valve (10) with packing in switch inlet, and union (12) with packing in outlet.

28.13.2.2 Assemble flow switch (11) to sump base (3) with packing, nut, and washer. Torque bolts 40 to 50 in-lbs. (4.52 to 5.65 Nm).

28.13.2.3 Connect flow line hose (9) to check valve (10), and flow hose (13) to union (12).

28.13.2.4 Connect switch electrical leads to terminal block.

28.13.2.5 Install sump assembly (paragraph 28.27).

28.13.2.6 Pressure test fuel system (paragraph 28.7).

28.13.2.7 Perform operational check of fuel quantity indicating system before servicing system (Chapters 95 and 96).

28.14 FUEL BOOST PUMPS

The boost pumps are electrically operated by 28 VDC circuits controlled by separate switches. Each pump is installed with a drain valve, a seal drain, and an outlet cross fitting.

28.14.1 Removal

28.14.1.1 Remove sump assembly (paragraph 28.25).

28.14.1.2 Disconnect fuel line hose (9, Figure 28-7) from pump outlet (8).

28.14.1.3 Disconnect pump electrical leads from terminal block (22). Drain trapped fuel through pump drain valve (20) or pump outlet (8).

28.14.1.4 Remove 12 bolts around mounting flange and pull boost pump (16) and gasket (15) from sump base (3).

28.14.1.5 When replacing pump: Remove seal drain adapter (18) with nut packing, pump outlet (8),

• COPYRIGHT © 2007 BY DART AEROSPACE LTD. •
THIS DOCUMENT IS PRIVATE AND CONFIDENTIAL AND IS SUPPLIED ON THE EXPRESS CONDITION THAT IT IS NOT TO BE USED FOR ANY PURPOSE OR COPIED OR COMMUNICATED TO ANY OTHER PERSON WITHOUT WRITTEN PERMISSION FROM DART AEROSPACE LTD.

and pump outlet plug (19) with bolt, washer, and packings, and pump drain valve (20) with packing.

28.14.1.6 Cover pump openings

28.14.2 Installation

NOTE

The screen in S2490 pump outlet (8, Figure 28-7) is to be removed prior to installing fitting on pump.

28.14.2.1 If installing a replacement boost pump (16), remove shipping plugs and install adapting parts as follows:

28.14.2.1.1 Install pump drain valve (20) with packing in pump (16).

28.14.2.1.2 Install seal drain adapter (18) with nut and packing in seal drain port.

28.14.2.1.3 Insert pump outlet (8) in top of pump outlet, and pump outlet plug (19) with packings, bolt and washer in lower end of outlet. Tighten bolt but omit lockwire until after hoses are connected to fitting during sump installation.

28.14.2.2 Position gasket (15) and pump to sump base (3). Install mounting bolts with thin aluminum washers. Attach ground jumper (17) on center aft bolt. Torque bolts 50 to 100 in-lbs. (5.65 to 11.3 Nm)

28.14.2.3 Connect pump electrical lead to terminal block (22) on sump base.

28.14.2.4 Install sump assembly (paragraph 28.27).

28.14.2.5 Pressure test system (paragraph 28.7).

28.14.2.6 Service fuel system.

28.14.2.7 Perform boost pump operational check (Chapter 96)

28.15 CANISTER TYPE BOOST PUMP CARTRIDGE

The canister type boost pump incorporates an integral cartridge pumping element. Replacement of element reduces damage to fuel cell components and eliminates need to break cell-to-pump seal during routine maintenance.

28.15.1 Removal

28.15.1.1 Disconnect and remove all electrical power from helicopter.

28.15.1.2 Remove allen screw (2, Figure 28-8) from valve locking bar (1). Rotate bar clear of cartridge (3).

NOTE

Removal of allen screw will disconnect white electrical negative (-) lead (4) and will allow valve locking bar to extend, closing off fuel supply to cartridge.

28.15.1.3 Disconnect black electrical positive (÷) lead (7) from cartridge terminal and move wiring clear of cartridge area.

28.15.1.4 Remove drain valve (6) from cartridge center drain port. Allow trapped fuel to drain.

28.15.1.5 Remove retaining ring (5) securing cartridge (3) in pump housing.

28.15.1.6 Install special cartridge removal tool (8), or equivalent, in cartridge drain port and secure with check nut. Using weight, impact cartridge from pump housing. Remove tool from cartridge.

28.15.1.7 Remove and discard packings (9 and 10).

28.15.2 Cleaning

Clean all foreign matter from cartridge bore and retaining ring groove in pump housing and from retaining ring.

• COPYRIGHT © 2007 BY DART AEROSPACE LTD. •
THIS DOCUMENT IS PRIVATE AND CONFIDENTIAL AND IS SUPPLIED ON THE EXPRESS CONDITION THAT IT IS NOT TO BE USED FOR ANY PURPOSE OR COPIED OR COMMUNICATED TO ANY OTHER PERSON WITHOUT WRITTEN PERMISSION FROM DART AEROSPACE LTD.

28.15.3 Repair

For cartridge repair. return cartridge to:

Airborne Aviation Products Group
711 Taylor St.
Elyria, Ohio 44035

28.15.4 Installation

MATERIALS REQUIRED

NUMBER	NOMENCLATURE
C-008	Petrolatum
C-405	Lockwire

28.15.4.1 Lubricate packings (9 and 10, Figure 28-8) (furnished with new cartridge) with petrolatum (C-008).

28.15.4.2 Using hand pressure, install cartridge in pump housing with arrows aligned on flanges (within ± 3°).

NOTE

Special cartridge removal tool, P/N E2-10-1, may be used as a work-aid during installation. Do not impact cartridge for damage to parts may result.

28.15.4.3 Secure cartridge in pump housing with retaining ring (5).

28.15.4.4 Install drain valve (6) in cartridge boss with retaining ring (5).

28.15.4.5 Rotate valve locking bar (1) over cartridge and in line with negative (-) terminal.

28.15.4.6 Insert white negative (-) lead terminal under bar and secure both with allen screw (2).

28.15.4.7 Connect black positive (+) lead terminal to positive (+) terminal on cartridge; do not over-torque.

28.15.4.8 Secure drain valve (6) to allen screw (2) with lockwire (C-405).

28.15.4.9 Pressure test system per paragraph 28.7.

28.15.4.10 Connect battery.

CAUTION

CARTRIDGE PUMPS ARE COOLED AND LUBRICATED BY FUEL WHICH EXITS THROUGH TOP UMBRELLA CHECK VALVE ON PUMP/CARTRIDGE HOUSING. DO NOT RUN DRY.

28.15.4.11 Perform fuel boost pump operational check as follows:

28.15.4.11.1 Ensure both boost pumps are covered with fuel. Refuel helicopter as required.

28.15.4.11.2 Connect battery and/or external power supply.

28.15.4.11.3 Turn BATTERY switch ON (BHT-212-FM) and close FUEL BOOST pump circuit breaker. Turn applicable boost pump switch ON. Check gage for adequate pressure from pump under test with remaining pump inoperative (paragraph 28.3).
(AC power must be ON)

28.15.4.11.4 Check exterior of boost pumps for evidence of leakage.

28.15.4.11.5 Turn BATTERY switch OFF.

• COPYRIGHT © 2007 BY DART AEROSPACE LTD. •
THIS DOCUMENT IS PRIVATE AND CONFIDENTIAL AND IS SUPPLIED ON THE EXPRESS CONDITION THAT IT IS NOT TO BE USED FOR ANY PURPOSE OR COPIED OR COMMUNICATED TO ANY OTHER PERSON WITHOUT WRITTEN PERMISSION FROM DART AEROSPACE LTD.

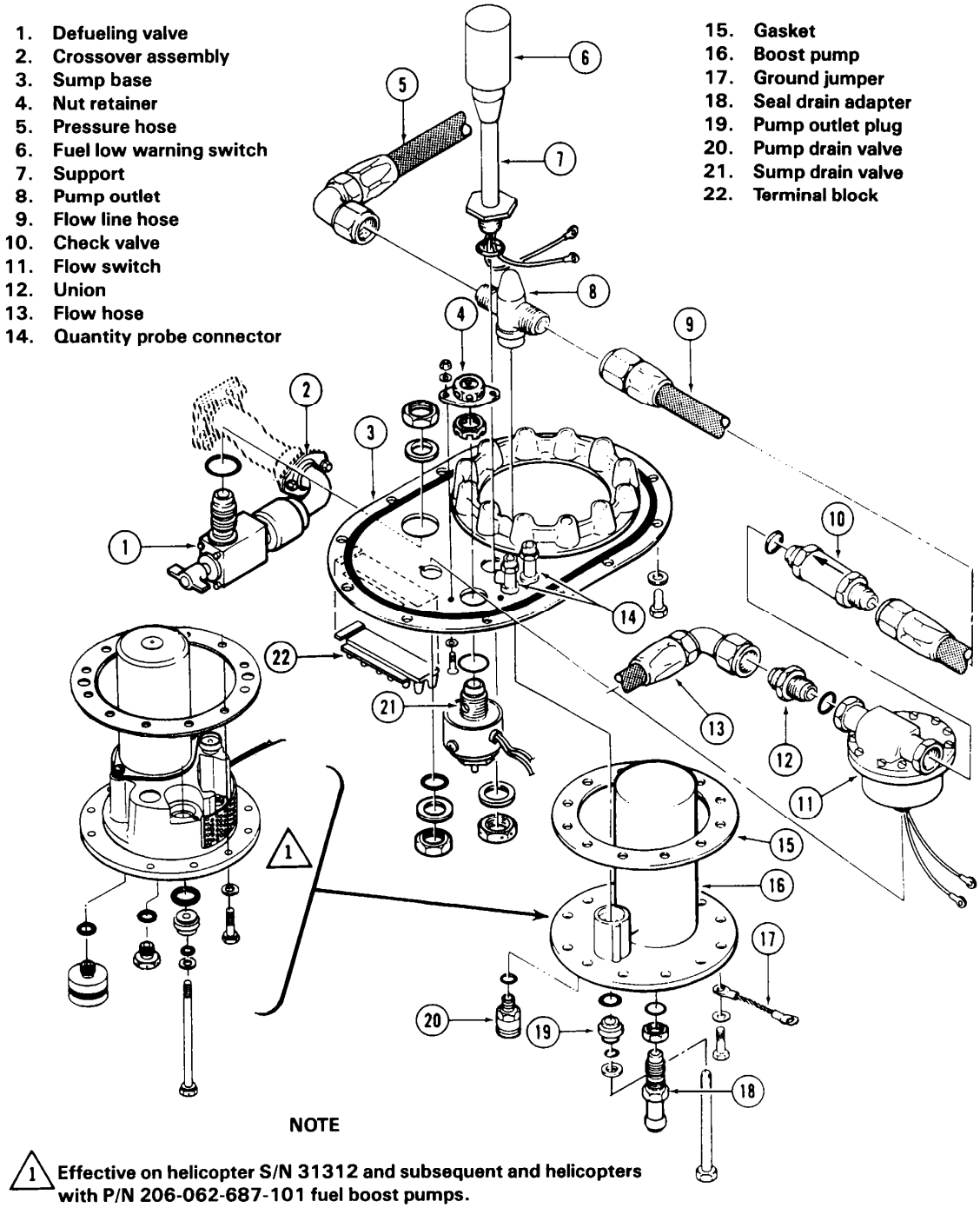

Figure 28-7. Fuel cell sump (left side typical)

• COPYRIGHT © 2007 BY DART AEROSPACE LTD. •
THIS DOCUMENT IS PRIVATE AND CONFIDENTIAL AND IS SUPPLIED ON THE EXPRESS CONDITION THAT IT IS NOT TO BE USED FOR ANY PURPOSE OR COPIED OR COMMUNICATED TO ANY OTHER PERSON WITHOUT WRITTEN PERMISSION FROM DART AEROSPACE LTD.

1. Valve locking bar
2. Allen screw
3. Cartridge
4. Negative lead
5. Retaining ring
6. Drain valve
7. Positive lead
8. Cartridge removal tool
9. Packing
10. Packing

NOTE

1 Cartridge removal tool may be obtained from:
Airborne Aviation Products Group
711 Taylor Street
Elyria, Ohio 44035

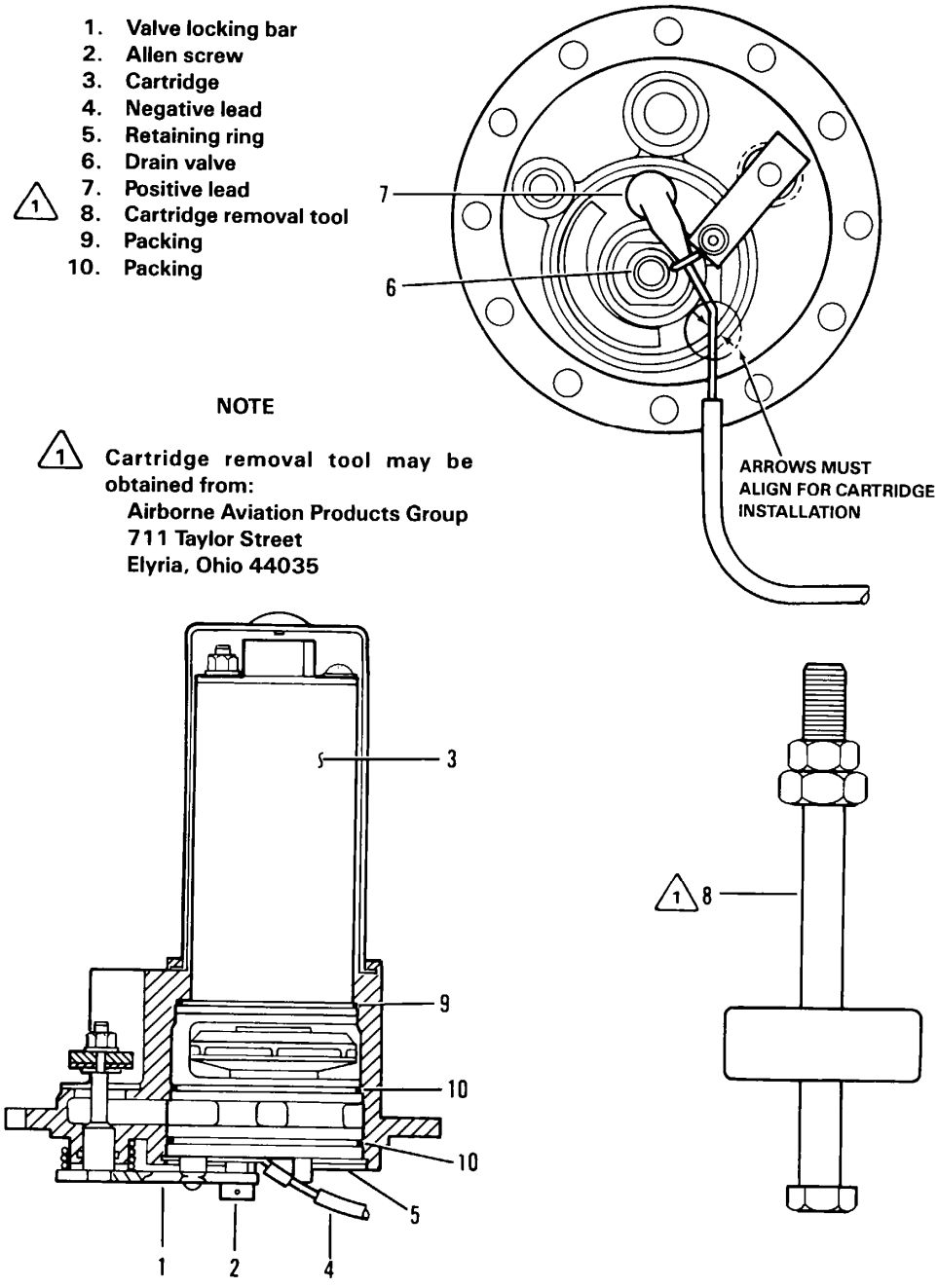

Figure 28-8. Fuel boost sump cartridge replacement

• COPYRIGHT © 2007 BY DART AEROSPACE LTD. •
THIS DOCUMENT IS PRIVATE AND CONFIDENTIAL AND IS SUPPLIED ON THE EXPRESS CONDITION THAT IT IS NOT TO BE USED FOR ANY PURPOSE OR COPIED OR COMMUNICATED TO ANY OTHER PERSON WITHOUT WRITTEN PERMISSION FROM DART AEROSPACE LTD.

28.16 EJECTOR PUMP

An ejector pump (Figure 28-9) is mounted in each forward fuel cell. The ejector pump is operated by fuel delivered through a hose from the electric boost pump. The ejector pump draws fuel from the forward compartment and interconnect line and continuously returns fuel to the rear compartment of forward cell, so fuel is usable in any flight attitude.

NOTE

Maintenance for left and right ejector pumps is the same.

28.16.1 Removal

28.16.1.1 De-fuel and purge system (Chapter 12).

28.16.1.2 Disconnect battery.

28.16.1.3 Remove floor panel from top of fuel cell.

28.16.1.4 Remove bolts (1, Figure 28-9) and remove access bar (3).

28.16.1.5 Disconnect hoses from ejector pump (17) and elbow (12).

28.16.1.6 Remove two washers (16) and bolts (15). Remove ejector pump (17).

28.16.1.7 If pump is to be replaced, remove elbow (12), nut (13), and packing (14) from pump. Discard packing.

28.16.1.8 Install protective cover over cell opening.

28.16.2 Cleaning

MATERIALS REQUIRED

NUMBER	NOMENCLATURE
C-405	Lockwire

28.16.2.1 Remove any obstructions from opening of pump using compressed air.

28.16.2.2 If necessary, clean nozzle opening of pump using lockwire (C-405). Do not enlarge nozzle in cleaning process.

28.16.3 Installation

28.16.3.1 Remove protective cover from cell opening.

28.16.3.2 If removed, install elbow (11, Figure 28-9) with nut (12) and new packing (13) in ejector pump (16)

28.16.3.3 Position pump (16) in fuel cell. Install two bolts (14) and washers (15).

28.16.3.4 Connect hoses (4 and 5) to ejector pump (16) and elbow (11).

28.16.3.5 Install access bar (3) and twelve bolts (1) with thin aluminum washers (2).

28.16.3.6 Pressure test system (paragraph 28.7).

28.16.3.7 Install floor panel over top of fuel cell.

28.16.3.8 Service fuel system (Chapter 12).

28.17 FLAPPER VALVE

A flapper valve is installed in each forward fuel cell and is located on the aft side of the fuel cell baffle. The flapper valve and flapper valve plates allow fuel to be transferred from forward compartment to aft compartment of forward fuel cells.

NOTE

Maintenance for both flapper valves is the same.

28.17.1 Removal

28.17.1.1 De-fuel and purge system (Chapter 12).

28.17.1.2 Remove floor section directly above

• COPYRIGHT © 2007 BY DART AEROSPACE LTD. •
THIS DOCUMENT IS PRIVATE AND CONFIDENTIAL AND IS SUPPLIED ON THE EXPRESS CONDITION THAT IT IS NOT TO BE USED FOR ANY PURPOSE OR COPIED OR COMMUNICATED TO ANY OTHER PERSON WITHOUT WRITTEN PERMISSION FROM DART AEROSPACE LTD.

forward fuel cell. Remove access bar (18, Figure 28-10), washers (19), and access bar (17).

28.17.1.3 Remove cover to fuel cell sump assembly and remove sump assembly (paragraph 28.12.1).

28.17.1.4 Remove nuts (3), washers (2), and bolts (11 and 14) from flapper valve. Remove flapper valve (1).

28.17.1.5 Disconnect hoses (4 and 15) from union (14) and remove nut (5) and union.

28.17.1.6 Remove nut (7), washer (8), and bolts (12).

28.17.1.7 Remove flapper valve plate (9 and 11).

28.17.1.8 Install protective cover over cell openings.

28.17.2 Inspection

28.17.2.1 Inspect flapper valve (1, Figure 28.10) for deterioration, cracks, and condition. Replace valve if deteriorated, nicked, cracked, or in unserviceable condition.

28.17.2.2 Inspect plate (9 and 11) for cracks, corrosion, and mechanical damage. Mechanical damage in excess of superficial and/or any corrosion damage is unacceptable. Replace plates if required.

28.17.3 Installation

28.17.3.1 Remove protective covers from cell openings.

28.17.3.2 Position plate (11, Figure 28-10), with head of bolt forward, on forward side of cell baffle (10).

28.17.3.3 Place plate (9) on aft side of cell baffle.

28.17.3.4 With heads forward, insert bolts (12, 13 and 16) through plates and baffle. Install washer (8) and nut (7) on bolt (12). Install washer (6) on aft side of plate (9) and install flapper valve (1). Install washers (2) and nuts (3). Torque nuts (3 and 7) 50 to 70 in-lbs. (5.65 to 7.91 Nm) Adjust the quantity of washers (6) between plate and flapper valve to ensure flapper works freely and centers over opening in plate and closes correctly.

28.17.3.5 Insert union (14) from forward side through plates and baffle. Install and tighten nut (5) on union.

28.17.3.6 Connect hoses (4 and 15) to union (14) and tighten.

28.17.3.7 Install access bar (17) with bolts (18) and washers (2). Torque 40 to 50 in-lbs. (4.52 to 5.65 Nm).

28.17.3.8 Install sump assembly (paragraph 28.12.3).

28.17.3.9 Pressure test fuel system (paragraph 28.7).

28.17.3.10 Install floor section

• COPYRIGHT © 2007 BY DART AEROSPACE LTD. •
THIS DOCUMENT IS PRIVATE AND CONFIDENTIAL AND IS SUPPLIED ON THE EXPRESS CONDITION THAT IT IS NOT TO BE USED FOR ANY PURPOSE OR COPIED OR COMMUNICATED TO ANY OTHER PERSON WITHOUT WRITTEN PERMISSION FROM DART AEROSPACE LTD.

28.18 LOW FUEL LEVEL WARNING SWITCHES

Float actuated low fuel level warning switches are connected to a FUEL LOW caution panel segment. The switches are installed on a support on each sump assembly.

NOTE

Maintenance procedures for both switches are the same.

28.18.1 Removal

28.18.1.1 Remove sump assembly (paragraph 28.12.1).

28.18.1.2 Disconnect electrical leads of fuel low warning switch (6, Figure 28-7) from terminal block (22).

28.18.1.3 To remove switch, hold support (7) and unscrew switch (6) fully. Carefully pull switch wires out of support. Remove and discard packing.

28.18.1.4 To remove switch support, remove retaining nut and washer from lower side of sump base (3). Lift support (7) and packing from upper side.

28.18.2 Installation

28.18.2.1 Place new packing on fuel low warning switch (6, Figure 28-7). Thread wires through support (7). Start and tighten switch.

28.18.2.2 If support (7) was removed, assemble with packing to sump base (3) and secure with washer and retaining nut. Torque nut 25 in-lbs. (2.83 Nm) maximum.

28.18.2.3 Connect fuel low warning switch electrical leads to terminal block (22).

28.18.2.4 Install sump assembly (20) (paragraph 28.12.3).

28.18.2.5 Pressure test system (paragraph 28.7).

• COPYRIGHT © 2007 BY DART AEROSPACE LTD. •
THIS DOCUMENT IS PRIVATE AND CONFIDENTIAL AND IS SUPPLIED ON THE EXPRESS CONDITION THAT IT IS NOT TO BE USED FOR ANY PURPOSE OR COPIED OR COMMUNICATED TO ANY OTHER PERSON WITHOUT WRITTEN PERMISSION FROM DART AEROSPACE LTD.

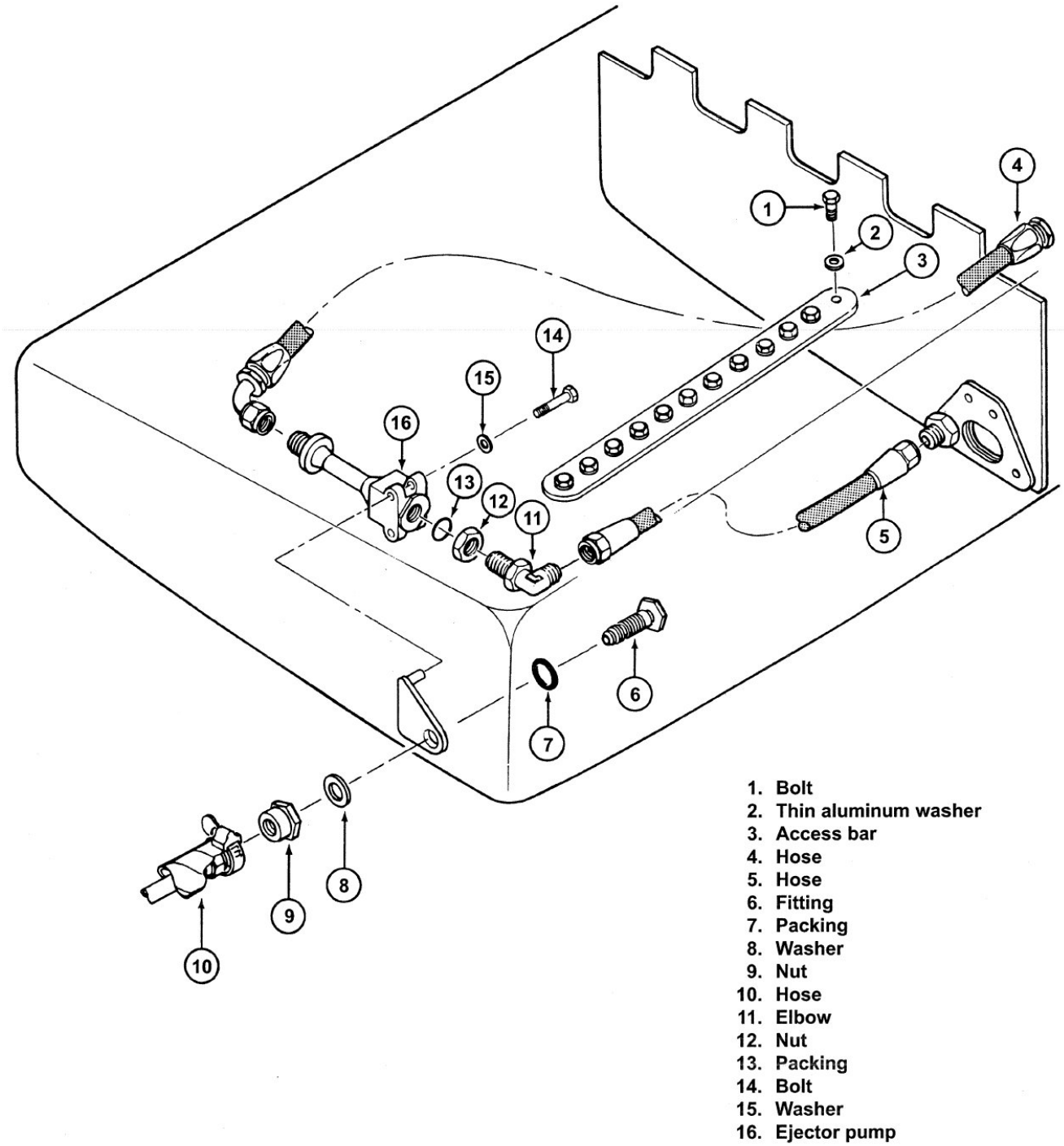

Figure 28-9. Ejector sump

• COPYRIGHT © 2007 BY DART AEROSPACE LTD. •
THIS DOCUMENT IS PRIVATE AND CONFIDENTIAL AND IS SUPPLIED ON THE EXPRESS CONDITION THAT IT IS NOT TO BE USED FOR ANY PURPOSE OR COPIED OR COMMUNICATED TO ANY OTHER PERSON WITHOUT WRITTEN PERMISSION FROM DART AEROSPACE LTD.

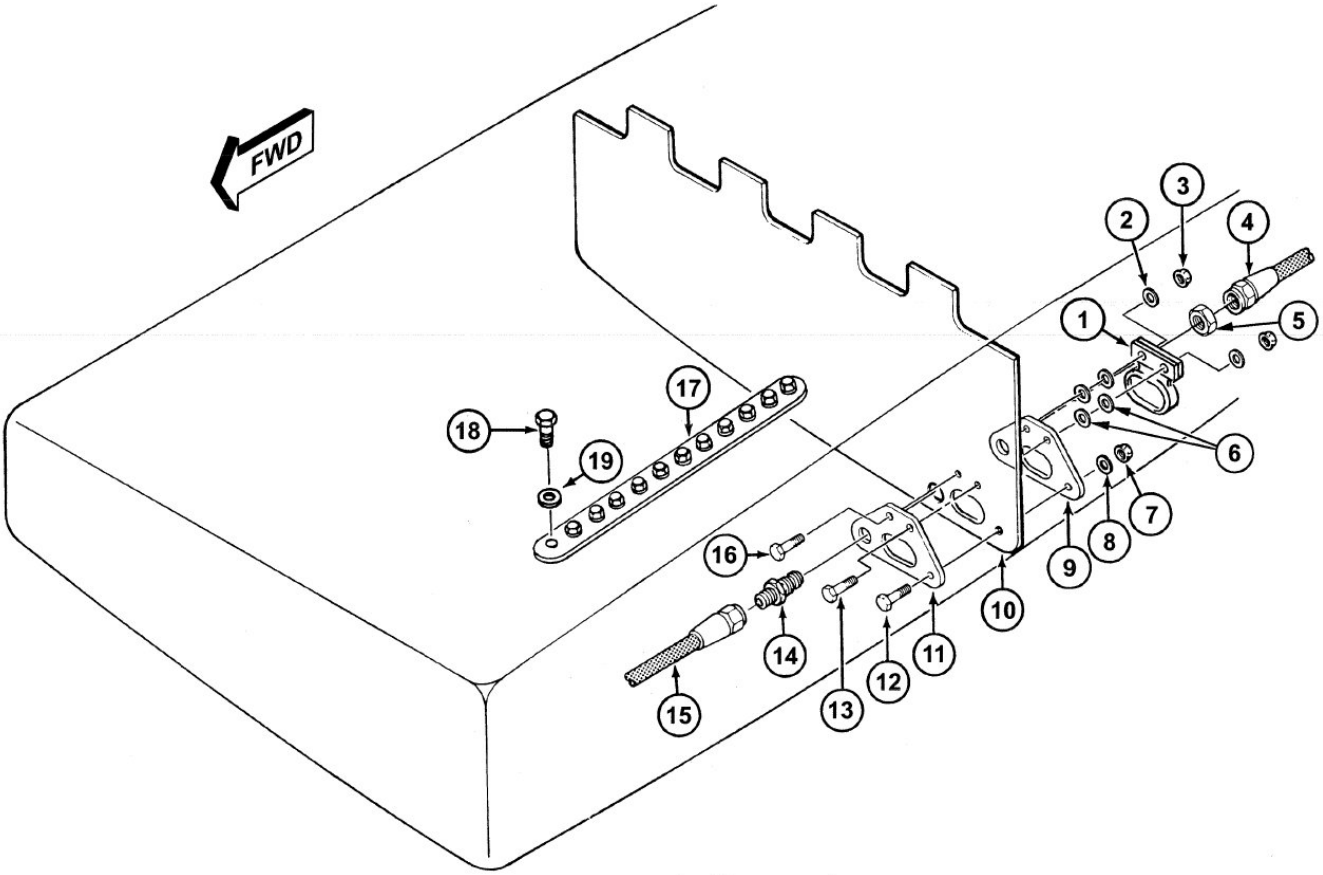

1. Flapper valve
2. Washer
3. Nut
4. Hose
5. Nut
6. Washer (as required)
7. Nut
8. Washer
9. Plate
10. Cell baffle
11. Plate
12. Bolt
13. Bolt
14. Union
15. Hose
16. Bolt
17. Access bar
18. Bolt
19. Thin aluminum washer

Figure 28-10. Flapper valve

• COPYRIGHT © 2007 BY DART AEROSPACE LTD. •
THIS DOCUMENT IS PRIVATE AND CONFIDENTIAL AND IS SUPPLIED ON THE EXPRESS CONDITION THAT IT IS NOT TO BE USED FOR ANY PURPOSE OR COPIED OR COMMUNICATED TO ANY OTHER PERSON WITHOUT WRITTEN PERMISSION FROM DART AEROSPACE LTD.

28.19 FORWARD CELL FUEL QUANTITY PROBES

Five electronic transmitter probes of the fuel quantity gage system are mounted in fuel cells; two in forward and rear compartments of each forward cell, and one in the center aft cell.

NOTE

Maintenance procedures for forward left and right cell quantity probes are the same.

28.19.1 Removal

28.19.1.1 De-fuel and purge system (Chapter 12)

28.19.1.2 Remove screws and remove left or right cabin floor panel as applicable.

28.19.1.3 Remove bolts and remove access bar (1, Figure 28-11) on top of fuel quantity probe (9).

28.19.1.4 Remove two clamps (7 and 8) by removing bolt, washers, and spacers.

28.19.1.5 Disconnect electrical leads from sump assembly (5) and remove fuel quantity probe (9).

28.19.1.6 Remove two clamps (2 and 4) by removing bolts, washers, and spacers.

28.19.1.7 Remove fuel quantity probe (3).

28.19.2 Installation

28.19.2.1 Position fuel quantity probe (9, Figure 28-11) in forward section of fuel cell and install clamps (7 and 8) using washers, spacers, and bolts. Torque bolts 15 to 25 in-lbs. (1.69 to 2.82 Nm).

28.19.2.2 Install access bar (1) with bolts. Torque 40 to 50 in-lbs. (4.52 to 5.65 Nm).

28.19.2.3 Position fuel quantity probe (3) in aft section of fuel cell and install clamps (2 and 4) using bolts, washers, and spacers. Torque bolts 15 to 25 in-lbs. (1.69 to 2.82 Nm).

28.19.2.4 Connect electrical leads from sump assembly to fuel quantity probe.

28.19.2.5 Install sump assembly (paragraph 28.27).

28.19.2.6 Install cabin floor panel.

28.19.2.7 Service fuel system (Chapter 12).

28.19.2.8 Perform operational check (Chapter 96).

28.20 AFT FUEL QUANTITY PROBE

Aft fuel quantity probe is mounted on brackets which are attached to back of aft center fuel cell. The probe electrically transmits fuel quantity to the fuel gage on instrument panel.

28.20.1 Removal

28.20.1.1 Disconnect governor bleed line (5, Figure 28-12) from check valve (4) on access door (2) and from fitting at underside of engine deck. Cap fittings.

28.20.1.2 Disconnect electrical wiring from two quantity gage connectors (6) and terminal block (7) on door.

28.20.1.3 Remove bolts and washers around edge of access door (2). Carefully remove door, packing (1), and quantity gage probe (10).

• COPYRIGHT © 2007 BY DART AEROSPACE LTD. •
THIS DOCUMENT IS PRIVATE AND CONFIDENTIAL AND IS SUPPLIED ON THE EXPRESS CONDITION THAT IT IS NOT TO BE USED FOR ANY PURPOSE OR COPIED OR COMMUNICATED TO ANY OTHER PERSON WITHOUT WRITTEN PERMISSION FROM DART AEROSPACE LTD.

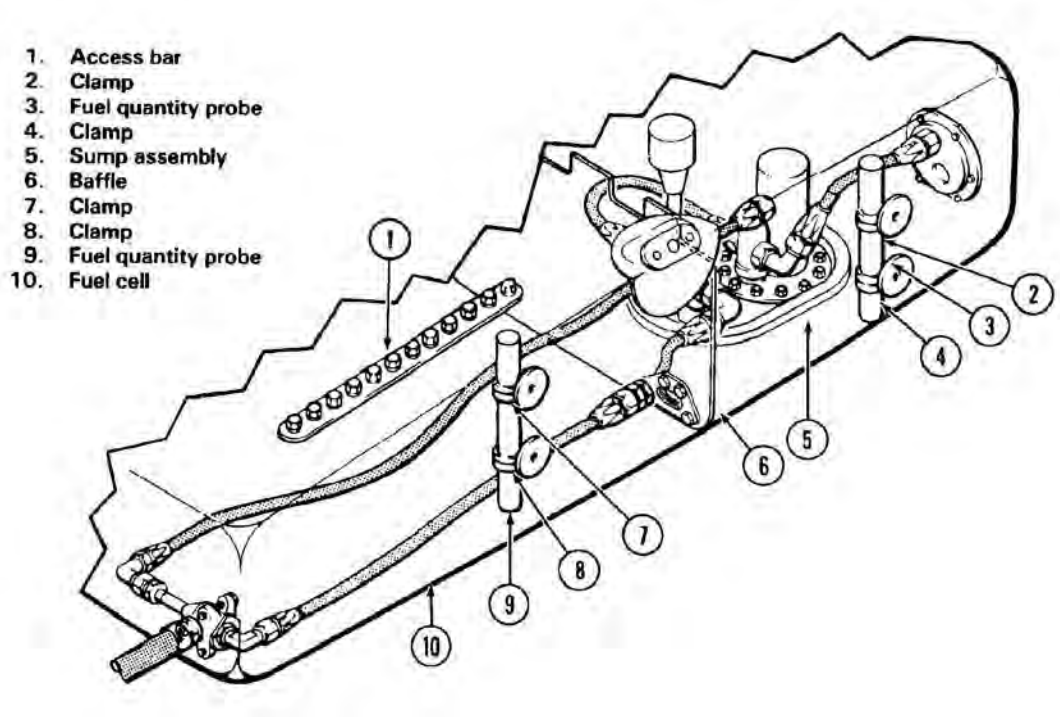

Figure 28-11. Fuel quantity probes — forward fuel cell

• COPYRIGHT © 2007 BY DART AEROSPACE LTD. •
THIS DOCUMENT IS PRIVATE AND CONFIDENTIAL AND IS SUPPLIED ON THE EXPRESS CONDITION THAT IT IS NOT TO BE USED FOR ANY PURPOSE OR COPIED OR COMMUNICATED TO ANY OTHER PERSON WITHOUT WRITTEN PERMISSION FROM DART AEROSPACE LTD.

28.20.2 Installation

28.20.2.1 Place packing (1, Figure 28-12) in groove around center cell access port.

28.20.2.2 Hold access door (2) near opening, with brackets extending into cell. Position quantity gage probe (10) in clips on brackets, securing with tie at upper clip.

28.20.2.3 Connect probe electrical leads to connectors on inside of door.

28.20.2.4 Align door and install twenty bolts with thin aluminum washers. Torque bolts 40 to 50 in-lbs. (4.52 to 5.65 Nm).

28.20.2.5 Connect governor bleed line tube (5) from fitting under deck to check valve (4) on access door.

28.20.2.6 Connect electrical wiring to quantity gage connectors (6) and to terminal block (7) on door.

28.20.2.7 Perform pressure test of fuel system (paragraph 28.7).

28.20.2.8 Perform functional check of quantity indicating system (Chapter 96).

28.21 SUMP DRAIN VALVE

Each sump is provided with a drain valve which can be operated manually or electrically by use of a push-button switch, to drain off possible accumulation of water or other fuel contamination.

28.21.1 Removal

28.21.1.1 Remove fuel sump assembly (paragraph 28.12.1).

28.21.1.2 Disconnect electrical leads of sump drain valve (21, Figure 28-7) from terminal block (22).

28.21.1.3 Remove nuts, washers, screws, nut retainer (4), and two Lock-O-Seals from sump base (3).

28.21.1.4 Remove retaining nut, packing, and drain valve.

28.21.2 Installation

MATERIALS REQUIRED

NUMBER	NOMENCLATURE
C-405	Lockwire

28.21.2.1 Assemble sump drain valve (21, Figure 28-7) to sump base (3) with packing and nut.

28.21.2.2 Insert two countersunk screws through sump base (3) from below. Assemble two Lock-O-Seals, nut retainer (4), and nuts with thin aluminum washers on screws.

28.21.2.3 Tighten valve. Secure with lockwire (C-405).

28.21.2.4 Connect electrical leads of valve to terminal block (22).

28.21.2.5 Install sump assembly (paragraph 28.12.3).

• COPYRIGHT © 2007 BY DART AEROSPACE LTD. •
THIS DOCUMENT IS PRIVATE AND CONFIDENTIAL AND IS SUPPLIED ON THE EXPRESS CONDITION THAT IT IS NOT TO BE USED FOR ANY PURPOSE OR COPIED OR COMMUNICATED TO ANY OTHER PERSON WITHOUT WRITTEN PERMISSION FROM DART AEROSPACE LTD.

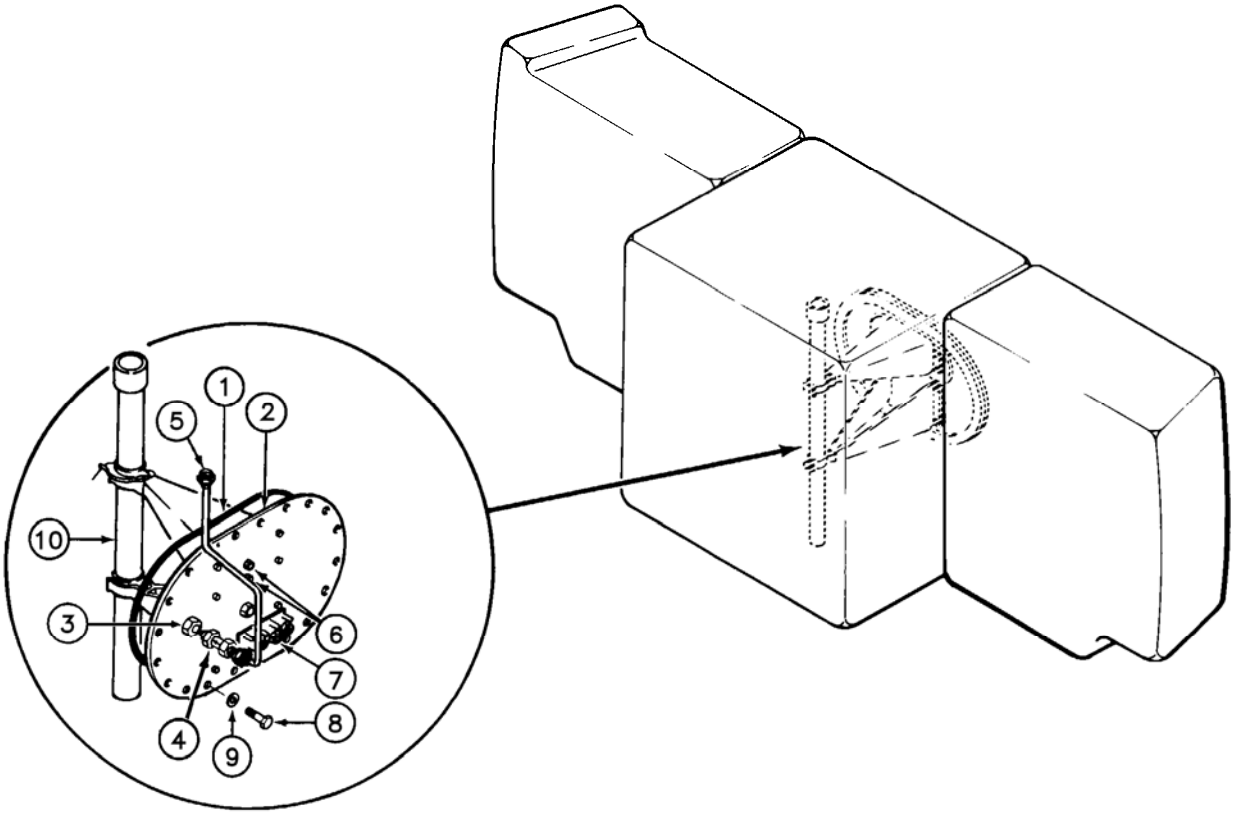

1. Packing
2. Access door
3. Bushing
4. Check valve
5. Governor bleed line
6. Quantity gage connector
7. Terminal block
8. Bolt
9. Washer
10. Quantity gage probe

Figure 28-12. Aft center fuel cell access door

• COPYRIGHT © 2007 BY DART AEROSPACE LTD. •
THIS DOCUMENT IS PRIVATE AND CONFIDENTIAL AND IS SUPPLIED ON THE EXPRESS CONDITION THAT IT IS NOT TO BE USED FOR ANY PURPOSE OR COPIED OR COMMUNICATED TO ANY OTHER PERSON WITHOUT WRITTEN PERMISSION FROM DART AEROSPACE LTD.

28.22 INTERCONNECT VALVES

On aircraft serial numbers 30687, 30931, 30576, 30817, 30599, 30544, 30866, and 30826 that have not incorporated DSB-D212-725-4, there are two motor-operated valves that are connected in the two interconnect lines between forward fuel cells and are lockwired in the open position. The aft interconnect valve is located in the cargo hook compartment. The forward interconnect valve is located in front of F.S. 102 bulkhead below the cabin deck.

On all aircraft except serial numbers 30687, 30931, 30576, 30817, 30599, 30544, 30866, (unless DSB-D212-725-4 has been incorporated), the forward interconnect valve has been removed and replaced with D212-725-1-273 Hose Assembly, and the aft interconnect valve has been replaced by D212-725-1-271 Fitting. The aft interconnect fitting is located in the cargo hook compartment. The forward interconnect hose assembly is located in front of F.S. 102 bulkhead below the cabin deck. For these aircraft disregard sections 28.23 and 28.24.

The D212-725-1-271 Fitting and D212-725-1-273 Hose Assembly can be removed and installed using standard practices.

It is permissible to replace the forward interconnect valve with the D212-725-1-273 Hose Assembly, and to replace the aft interconnect valve with the D212-725-1-271 Fitting.

28.23 FORWARD INTERCONNECT VALVE

28.23.1 Removal

28.23.1.1 De-fuel and purge system (Chapter 12).

28.23.1.2 Remove cabin deck panel for access to area forward of F.S. 102 bulkhead and between B.L. 14 beams.

28.23.1.3 Remove two clamps to detach cover hoses from each side of valve.

28.23.1.4 Disconnect fuel tube and hose from valve fittings.

28.23.1.5 Remove three nuts, screws, and washers to detach valve from F.S. 102 bulkhead.

28.23.1.6 Remove valve upward from grommet in fuselage lower skin. If replacing valve, remove drain plug and packing and install a shipping plug.

28.23.2 Installation

28.23.2.1 If replacing valve, remove shipping plug and install plug with packing.

28.23.2.2 Insert lower end of valve through grommet in lower skin at B.L. 4.80 left.

28.23.2.3 Align valve legs to mounting holes in F.S. 102 bulkhead and install three screws with thin aluminum washers under heads, secured by nuts at aft side of bulkhead.

28.23.2.4 Connect fuel tube and hose to valve fittings.

28.23.2.5 Position cover hoses on each side of valve and secure with clamps. Position clamps so that adjusting screw is toward bottom of valve.

28.23.2.6 Lockwire valve in open position.

28.23.2.7 Pressure test system (paragraph 28.7).

28.23.2.8 Install cabin deck panel.

28.24 AFT INTERCONNECT VALVE

28.24.1 Removal

28.24.1.1 De-fuel and purge system (Chapter 12).

28.24.1.2 Remove four nuts, screws, and washers to detach aft interconnect valve (20, Figure 28-2) from bracket and flanges of crossover assemblies. Remove valve.

• COPYRIGHT © 2007 BY DART AEROSPACE LTD. •
THIS DOCUMENT IS PRIVATE AND CONFIDENTIAL AND IS SUPPLIED ON THE EXPRESS CONDITION THAT IT IS NOT TO BE USED FOR ANY PURPOSE OR COPIED OR COMMUNICATED TO ANY OTHER PERSON WITHOUT WRITTEN PERMISSION FROM DART AEROSPACE LTD.

28.24.2 Installation

28.24.2.1 Position aft interconnect valve (20, Figure 28-2) between flanges of crossover assemblies, and align three mounting holes to bracket on bulkhead.

28.24.2.2 Install four screws, with thin aluminum washers under heads, and nuts.

28.24.2.3 Lockwire valve in open position.

28.24.2.4 Pressure test system (paragraph 28.7).

28.25 DEFUEL VALVES

Manual valves are incorporated in both ends of the aft interconnect tube, below the inboard side of each forward cell sump.

28.25.1 Removal

28.25.1.1 Remove sump assembly (paragraph 28.12.1).

28.25.1.2 Remove retaining nut, washer, packing and de-fueling valve (1, Figure 28-7) with attached crossover assembly (2) from sump base (3).

28.25.1.3 When required, remove four screws and washers to separate crossover assembly from valve.

28.25.2 Installation

MATERIALS REQUIRED

NUMBER	NOMENCLATURE
C-405	Lockwire

28.25.2.1 Assemble crossover assembly (2, Figure 28-7), if removed, to de-fueling valve (1) with four screws and thin aluminum washers. Secure screws with lockwire (C-405).

28.25.2.2 Position valve on sump base (3). Install packing, washer, and retaining nut.

28.25.2.3 Install sump assembly (paragraph 28.12.3). During installation, attach crossover assembly (2) to mating flange of aft interconnect hose with packing and two bolts with thin aluminum washers.

28.26 SIPHON BREAKER VALVES

Two siphon-breaker valves are mounted in vent tube tees above the engine deck, near the fuel shutoff valve.

28.26.1 Removal

28.26.1.1 Remove door on left side of pylon support in cabin for access to engine deck area ahead of forward engine firewall.

28.26.1.2 Remove siphon breaker valve (8, Figure 28-2) with packing from bushing in aft end of tee where vent tube passes down through deck. One tee is located at B.L. 5.9 and F.S. 157; the other is at B.L. 2.5 and F.S. 160.

28.26.2 Installation

28.26.2.1 Install siphon breaker valve (8, Figure 28-2) with packing into bushing in vent tube tee.

28.26.2.2 Install access door.

28.27 FUEL SHUTOFF VALVE AND FUEL VALVE MANIFOLD

A motor operated gate valve, located in the main fuel line is mounted on front of the power plant forward firewall and is accessible through an access panel on left side of pylon island. The fuel shutoff valve is controlled by the MAIN FUEL switch and has a manual override handle which also serves as a visual position indicator. A thermal relief valve allows internal bypass of trapped fuel on outlet side of shutoff valve, being set to open at 90 to 120 PSI and to reseat at 80 PSI minimum. A check valve manifold is connected to the inlet port of the fuel

• COPYRIGHT © 2007 BY DART AEROSPACE LTD. •
THIS DOCUMENT IS PRIVATE AND CONFIDENTIAL AND IS SUPPLIED ON THE EXPRESS CONDITION THAT IT IS NOT TO BE USED FOR ANY PURPOSE OR COPIED OR COMMUNICATED TO ANY OTHER PERSON WITHOUT WRITTEN PERMISSION FROM DART AEROSPACE LTD.

shutoff valve. The manifold contains two separate valve elements at the inlet ports. Each consists of a check valve which prevents reverse flow except through the thermal relief bypass of trapped fuel.

28.27.1 Removal

NOTE

Remove shutoff valve and manifold as an assembly and disassemble, as required, after removal.

28.27.1.1 Open left cowling of engine and remove left lower access panel from pylon island.

28.27.1.2 Provide suitable container to catch fuel. Loosen clamp and move shroud away from firewall, disconnect fuel line from union (16, Figure 28-13). Remove nut (14) and washer (15) from union.

28.27.1.3 Disconnect electrical connector from fuel shutoff valve (10).

28.27.1.4 Disconnect fuel inlet lines from bottom of fuel valve manifold (28).

28.27.1.5 Remove bolts (19), nuts (25), and washers (22) securing fuel shutoff valve (10) to bracket (21).

28.27.1.6 Remove nuts (29), washers from bolts (5).

28.27.1.7 Remove fuel shutoff valve (10) and fuel valve manifold (28) from helicopter. Reinstall washers and nuts (29) temporarily to retain aluminum washers (3), spacers (4), and bolts (5) in place.

28.27.1.8 Disassemble fuel shutoff valve (10) and fuel valve manifold (28) as follows:

28.27.1.8.1 Remove bolts (13), washers, and nuts (6) and separate fuel shutoff valve and fuel valve manifold.

28.27.1.8.2 Remove elbow (18) from fitting (12) and remove flange (23) from fitting. Do not remove union (16) from elbow (18) unless required for parts replacement.

28.27.1.8.3 Remove fitting (8) and flange (7) from fuel valve manifold (28).

28.27.1.8.4 Discard packings (9, 11, and 20).

28.27.1.8.5 If fuel valve manifold (28) is to be replaced, remove plugs (1, 26, and 31) and packings (2, 27, and 30). Discard packings.

28.27.2 Installation

28.27.2.1 If removed, place packings (2, 27, and 30, Figure 28-8) on plugs (1, 26, and 31) and install plugs in fuel valve manifold (28). Secure plugs with lockwire (C-405).

28.27.2.2 Assemble fuel shutoff valve (10) and fuel valve manifold (28) as follows:

28.27.2.2.1 Position flange (7) and packing (24) on fitting (8) and install fitting in port of fuel valve manifold (28).

28.27.2.2.2 Assemble fitting (12), flange (23), packing (20), and elbow (18). Install packing (17) and union (16) in elbow, if removed.

28.27.2.2.3 Using packings (9 and 11), position fittings (8 and 12)on fuel shutoff valve(10). Install two bolts (13), washers and nuts (6). Do not tighten nuts (6) at this time.

28.27.2.3 Remove nuts (29) and washers from bolts (5). Hold bolts (5) in place through firewall with spacers (4) and aluminum washers (3) installed. Position fuel shutoff valve (10) and fuel valve manifold (28) assembly to firewall with bolts (5) through mounting holes of fuel valve manifold (28), and union (16) through hole in firewall.

28.27.2.4 Position three washers (22) between mounting holes of bracket (21) and each lower mounting hole of flange (23). Install bolts (19), washers (22), and nuts (25). Tighten nuts (6 and 25) evenly.

28.27.2.5 Install washers and nuts (29) on bolts (5).

• COPYRIGHT © 2007 BY DART AEROSPACE LTD. •
THIS DOCUMENT IS PRIVATE AND CONFIDENTIAL AND IS SUPPLIED ON THE EXPRESS CONDITION THAT IT IS NOT TO BE USED FOR ANY PURPOSE OR COPIED OR COMMUNICATED TO ANY OTHER PERSON WITHOUT WRITTEN PERMISSION FROM DART AEROSPACE LTD.

28.27.2.6 Install washer (15) and nut (14) on union (16).

28.27.2.7 Connect fuel inlet lines to fittings on bottom of fuel valve manifold (28).

28.27.2.8 Connect electrical connector to fuel shutoff valve (10) and secure with lockwire (C-405).

28.27.2.9 Connect fuel line to union (16). Position shroud over fuel line fitting and secure with clamp.

28.27.2.10 Turn battery switch ON, turn both boost pump switches ON, move FUEL VALVE switch to ON. Check all disturbed points for fuel leaks. Observe that manual override handle on fuel shutoff valve (10) moves to open position. Move FUEL VALVE switch to OFF, observe that manual override handle moves to closed position. Turn both boost pump switches OFF. Turn battery switch OFF.

28.27.2.11 Close engine cowling and install access panel on pylon island.

• COPYRIGHT © 2007 BY DART AEROSPACE LTD. •
THIS DOCUMENT IS PRIVATE AND CONFIDENTIAL AND IS SUPPLIED ON THE EXPRESS CONDITION THAT IT IS NOT TO BE USED FOR ANY PURPOSE OR COPIED OR COMMUNICATED TO ANY OTHER PERSON WITHOUT WRITTEN PERMISSION FROM DART AEROSPACE LTD.

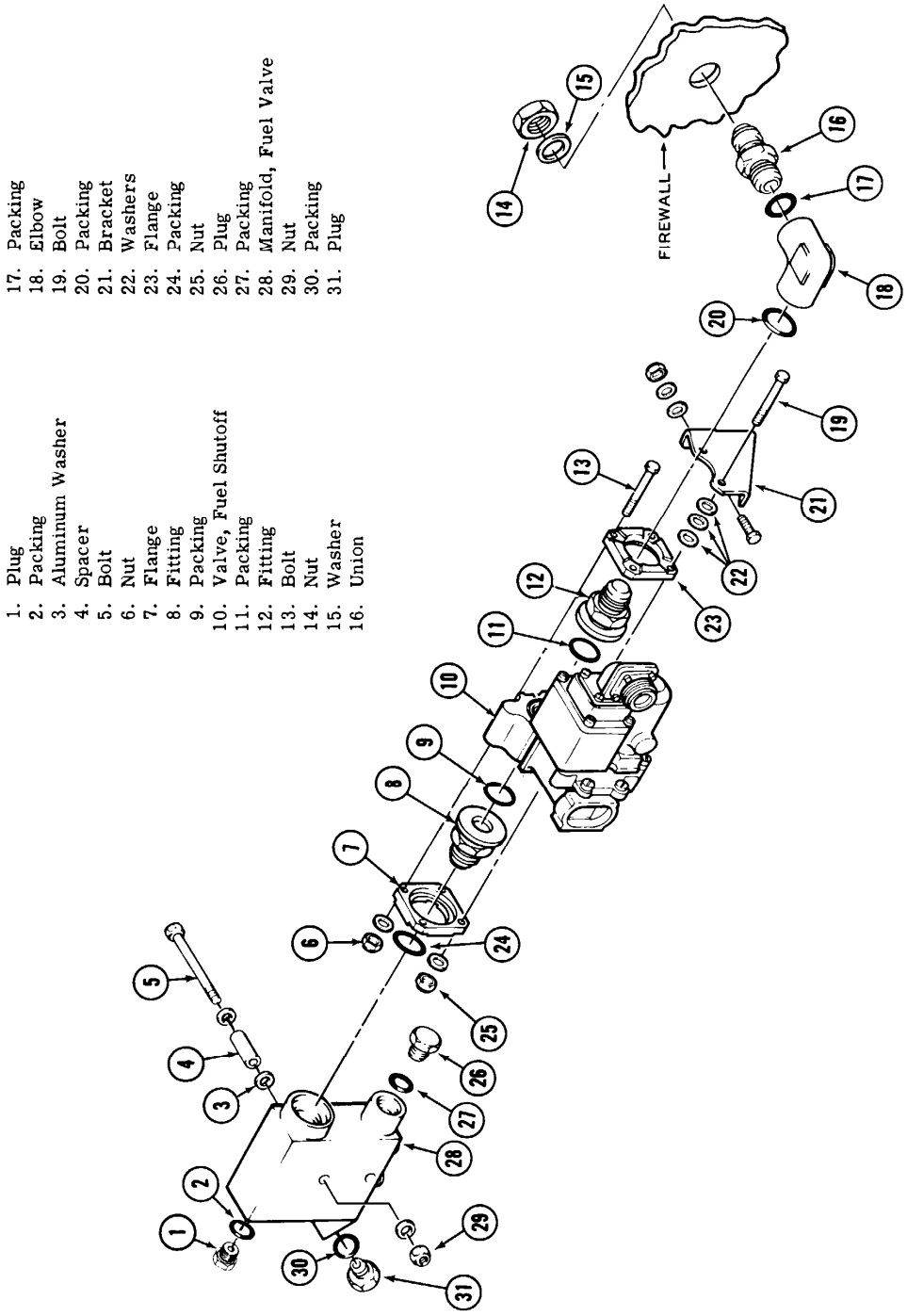

Figure 28-13. Fuel shutoff valve and fuel valve manifold

• COPYRIGHT © 2007 BY DART AEROSPACE LTD. •
THIS DOCUMENT IS PRIVATE AND CONFIDENTIAL AND IS SUPPLIED ON THE EXPRESS CONDITION THAT IT IS NOT TO BE USED FOR ANY PURPOSE OR COPIED OR COMMUNICATED TO ANY OTHER PERSON WITHOUT WRITTEN PERMISSION FROM DART AEROSPACE LTD.

28.28 MAIN FUEL FILTER

The main fuel filter has a micronic type element and electrical means of indicating any impending bypass condition which may occur. The filter is a cylindrical unit, horizontally mounted on forward firewall in left side of engine compartment. Piping connections to the filter head are; an inlet line from shutoff valve of supply system, a drain line with manual valve, and an outlet coupling for engine fuel control hose. If a clogging condition should develop in the filter element, a normally-open switch would be closed by differential pressure across the filter, lighting the FUEL FILTER segment on the caution panel as a warning that further clogging may cause fuel to flow through bypass valve without filtration.

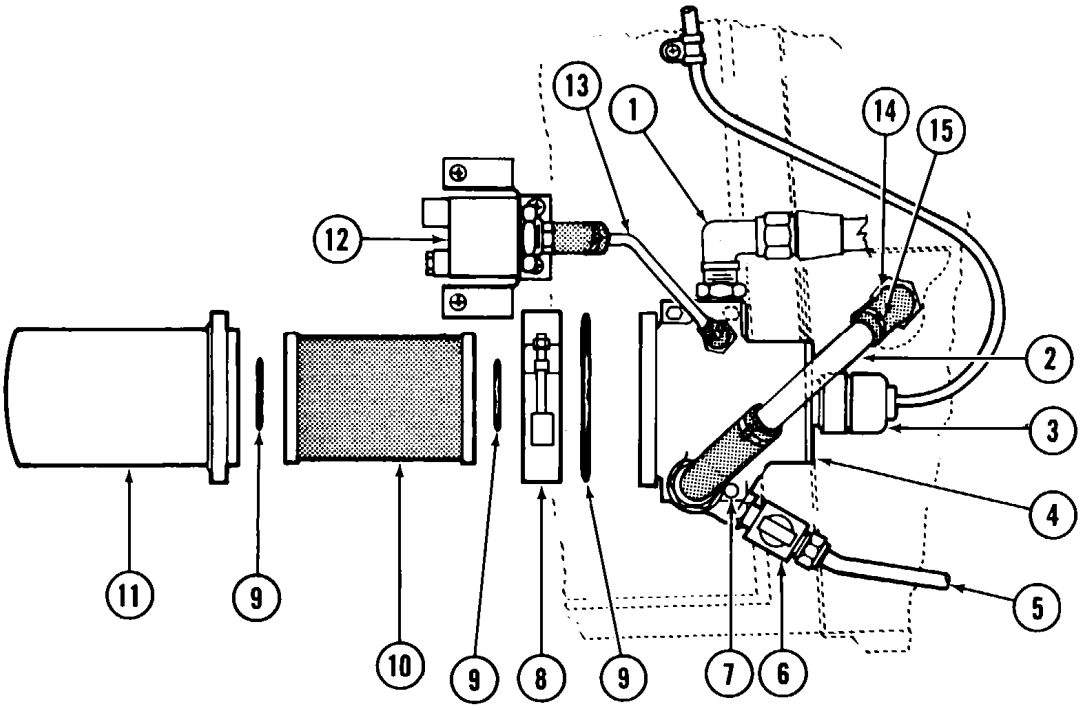

1. Outlet fitting
2. Fuel line
3. Electrical plug
4. Filter head
5. Drain line
6. Drain valve
7. Bolt
8. Clamp
9. Packings
10. Element
11. Filter body
12. Pressure transmitter
13. Pressure transmitter line
14. Shroud
15. Clamp

Figure 28-14. Main fuel filter

• COPYRIGHT © 2007 BY DART AEROSPACE LTD. •
THIS DOCUMENT IS PRIVATE AND CONFIDENTIAL AND IS SUPPLIED ON THE EXPRESS CONDITION THAT IT IS NOT TO BE USED FOR ANY PURPOSE OR COPIED OR COMMUNICATED TO ANY OTHER PERSON WITHOUT WRITTEN PERMISSION FROM DART AEROSPACE LTD.

28.28.1 Removal

28.28.1.1 Open engine cowling on the left side.

28.28.1.2 Disconnect fuel hose from outlet fitting (1, Figure 28-14) on filter head (4). Drain fuel from filter by opening drain valve (6) located under filter head (4).

28.28.1.3 Remove filter element (10) as follows:

NOTE

Change fuel filter element when fuel filter caution light illuminates.

28.28.1.3.1 Open V-band clamp (8).

28.28.1.3.2 Remove filter body (11) and element (10), from filter head (4).

28.28.1.3.3 Separate element (10) and packings (9) from filter body (11).

28.28.1.3.4 The filter head (4) will normally remain in place but can be removed when necessary by disconnecting electrical cable plug (3), fuel line (2), drain line (5), pressure transmitter line (13), and removing four bolts (7).

28.28.2 Installation

28.28.2.1 If removed, reinstall filter head (4, Figure 28-9), secure to firewall with bolts (7) and washers. Secure bolt (7) heads with lockwire (C-405). Connect fuel line tube (2), filter outlet fitting (1), and drain line (5) to drain valve (6) at bottom of filter head (4). Connect and secure electrical cable plug (3) with lockwire (C-405). Connect fuel pressure transmitter line (13) to filter head (4) and to pressure transmitter (12).

28.28.2.2 Install filter element (10) and filter body (11).

28.28.2.2.1 Place packing (9) on boss in bottom of filter body (11).

28.28.2.2.2 Place clean filter element (10) in body, seated firmly on boss.

28.28.2.2.3 Install packing (9) around upper lip of filter body (11), next to flange.

28.28.2.2.4 Place packing (9) around center boss in (C-405).

28.28.2.2.5 Install body assembly into filter head (4), pressing firmly to seat.

28.28.2.2.6 Install V-band clamp (8) around mating flanges of filter head (4) and filter body (11). Torque nut on clamp (8) 50 inch-pounds.

28.28.2.3 Connect hose from engine fuel control inlet to outlet fitting on filter.

28.28.2.4 During next ground run-up, check fuel filter and connections for leaks. Also check that FUEL FILTER light on caution panel does not come on.

28.29 PRESSURE TRANSMITTER

One electrical transmitter of the fuel pressure gage system, mounted on left rear side of the forward engine firewall, is connected to main fuel filter.

28.29.1 Removal

MATERIALS REQUIRED

NUMBER	NOMENCLATURE
C-428	Caps and/or Plugs

28.29.1.1 Disconnect electrical power

28.29.1.2 Open engine cowling for access to rear left side of aft cabin bulkhead.

28.29.1.3 Disconnect electrical connector (1, Figure 28-15) from pressure transmitter (4).

28.29.1.4 Disconnect tube (12) from union (11).

28.29.1.5 Remove union (11) and packing (10). Discard packing.

• COPYRIGHT © 2007 BY DART AEROSPACE LTD. •
THIS DOCUMENT IS PRIVATE AND CONFIDENTIAL AND IS SUPPLIED ON THE EXPRESS CONDITION THAT IT IS NOT TO BE USED FOR ANY PURPOSE OR COPIED OR COMMUNICATED TO ANY OTHER PERSON WITHOUT WRITTEN PERMISSION FROM DART AEROSPACE LTD.

28.29.1.6 Remove nut (9) and washer (8).

28.29.1.7 Remove pressure transmitter (4). If applicable, remove plug (2) and packing (3). Discard packing.

28.29.1.8 Cover openings with caps and/or plugs (C-428).

29.29.1.9 If required, remove screw (5) and washers (6) to detach bracket (7) from aft cabin bulkhead.

28.29.2 Installation

MATERIALS REQUIRED

NUMBER	NOMENCLATURE
C-008	Petrolatum

28.29.2.1 If removed, install screws (5, Figure 28-15) and washers (6) to attach bracket (7) to aft cabin bulkhead.

28.29.2.2 If applicable, apply petrolatum (C-008) to packing (3).

28.29.2.3 Remove protective caps and/or plugs. If applicable, install plug (2) and packing (3).

28.29.2.4 Position pressure transmitter (4) on bracket (7). Install washer (8) and packing (9).

28.29.2.5 Apply petrolatum (C-008) to packing (10). Install packing and union (11).

28.29.2.6 Connect tube (12).

28.29.2.7 Connect electrical connector (1).

28.29.2.8 Perform fuel system pressure test.

28.29.2.9 Service fuel system (Chapter 12)

28.29.2.10 Perform operational check (Chapter 96)

28.29.2.11 Check area for leaks.

28.29.2.12 Close Engine cowling.

28.30 GOVERNOR BLEED LINE CHECK VALVE

28.30.1 Removal

MATERIALS REQUIRED

NUMBER	NOMENCLATURE
C-428	Caps and/or Plugs

28.30.1.1 De-fuel system until fuel level in aft cells is below half full (Chapter 12).

28.30.1.2 Gain access through door on bottom of fuselage to area aft of F.S. 178.

28.30.1.3 Using a suitable vessel to catch trapped fuel, disconnect governor bleed tube (5, Figure 28-12) from check valve (4) on center fuel cell access door. Cap open line with caps and/or plugs (C-428).

28.30.1.4 Hold bushing (3) wrench while removing check valve (4) with packing. Cover opening to keep out contamination.

28.30.2 Installation

28.30.2.1 Uncover bushing at center cell access door.

28.30.2.2 Remove caps and/or plugs

28.30.2.2 Install check valve (4, Figure 28-12), with arrow pointing forward and with packing on inner end, into bushing (3). Hold bushing with wrench while tightening valve.

28.30.2.3 Connect governor bleed tube (5) to check valve.

28.30.2.4 Check for leaks during next servicing and operation of systems.

• COPYRIGHT © 2007 BY DART AEROSPACE LTD. •
THIS DOCUMENT IS PRIVATE AND CONFIDENTIAL AND IS SUPPLIED ON THE EXPRESS CONDITION THAT IT IS NOT TO BE USED FOR ANY PURPOSE OR COPIED OR COMMUNICATED TO ANY OTHER PERSON WITHOUT WRITTEN PERMISSION FROM DART AEROSPACE LTD.

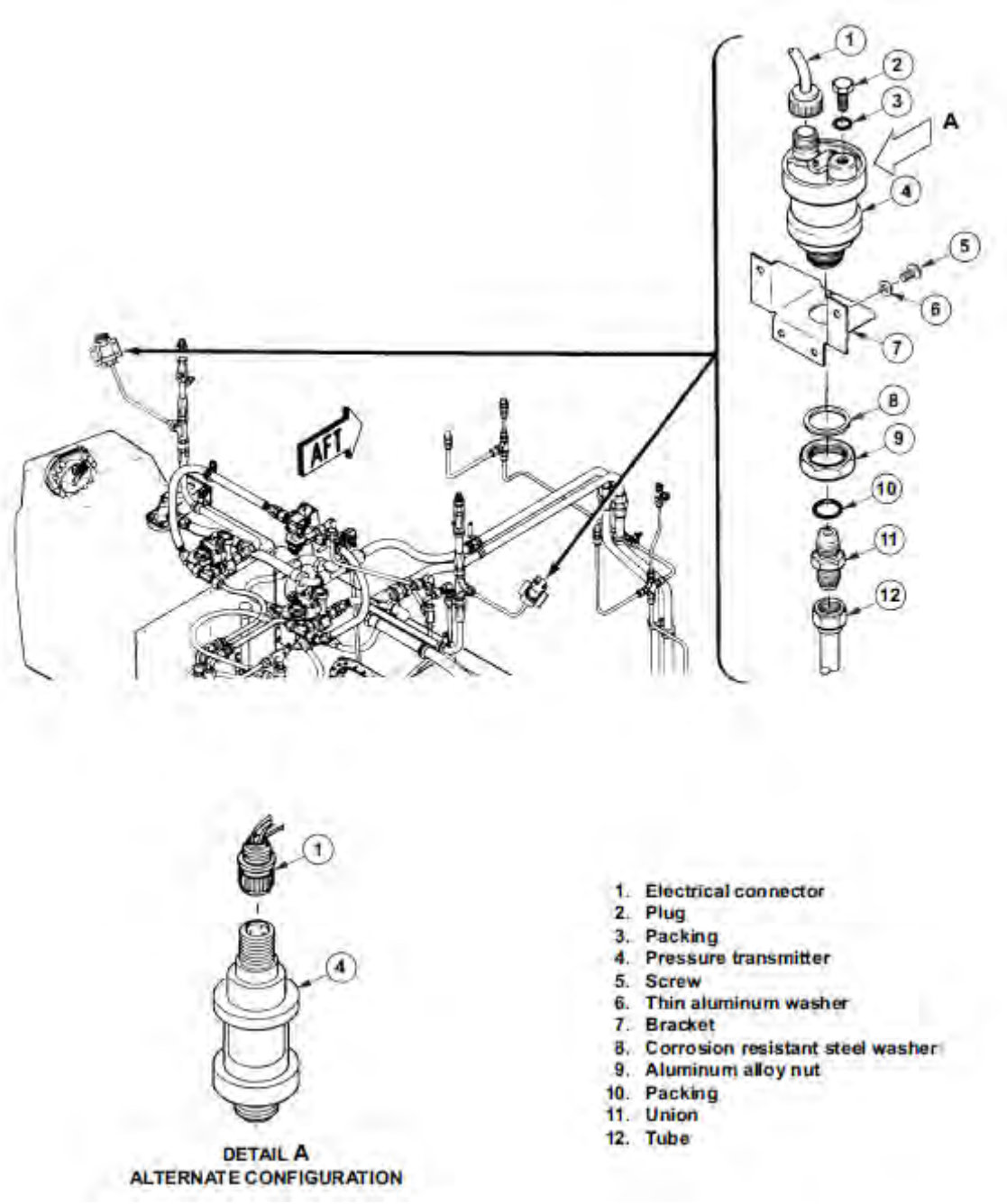

Figure 28-15. Fuel Pressure Transmitter

• COPYRIGHT © 2007 BY DART AEROSPACE LTD. •
THIS DOCUMENT IS PRIVATE AND CONFIDENTIAL AND IS SUPPLIED ON THE EXPRESS CONDITION THAT IT IS NOT TO BE USED FOR ANY PURPOSE OR COPIED OR COMMUNICATED TO ANY OTHER PERSON WITHOUT WRITTEN PERMISSION FROM DART AEROSPACE LTD.

CHAPTER 29
HYDRAULIC SYSTEM
(29-00-00)

• COPYRIGHT © 2007 BY DART AEROSPACE LTD. •
THIS DOCUMENT IS PRIVATE AND CONFIDENTIAL AND IS SUPPLIED ON THE EXPRESS CONDITION THAT IT IS NOT TO BE USED FOR ANY PURPOSE OR COPIED OR COMMUNICATED TO ANY OTHER PERSON WITHOUT WRITTEN PERMISSION FROM DART AEROSPACE LTD.

CHAPTER 29 – HYDRAULIC SYSTEM (29-00-00)

TABLE OF CONTENTS

Table of Contents 2
List of Figures 3
List of Tables 3
29.1 Hydraulic System 4
29.2 General Maintenance Practices 4
29.2.1 Leakage Limits 4
29.2.2 Troubleshooting 11
29.2.3 Flushing 17
29.2.4 Operational Check 18
29.2.5 Operational Check (Helicopter Power) 20
29.3.1 Reservoir Assemblies 21
29.3.2 Integrated Valve and Filter Assemblies 24
29.3.3 Hydraulic Filter Assemblies 25
29.3.4 Hydraulic System Accumulators 29
29.3.5 Hydraulic Pump (System 1) 29
29.3.6 Hydraulic Pump (System 2) 31
29.3.7 Pressure Transmitter 34
29.3.8 Collective Hydraulic Cylinder 36
29.3.9 Cyclic Hydraulic Cylinder 40
29.3.10 Tail Rotor Hydraulic Cylinder 42
29.4 Rotor Brake Hydraulic System 46
29.4.1 Rotor Brake System 46
29.4.2 Troubleshooting 46
29.4.3 Servicing 49
29.4.4 Bleeding 49
29.4.5 Master Cylinder 49

• COPYRIGHT © 2007 BY DART AEROSPACE LTD. •
THIS DOCUMENT IS PRIVATE AND CONFIDENTIAL AND IS SUPPLIED ON THE EXPRESS CONDITION THAT IT IS NOT TO BE USED FOR ANY PURPOSE OR COPIED OR COMMUNICATED TO ANY OTHER PERSON WITHOUT WRITTEN PERMISSION FROM DART AEROSPACE LTD.

LIST OF FIGURES

Figure 29-1. Hydraulic schematic (sheet 1 of 4) 6
Figure 29-1. Hydraulic schematic (sheet 2 of 4) 7
Figure 29-1. Hydraulic schematic (sheet 3 of 4) 8
Figure 29-1. Hydraulic schematic (sheet 4 of 4) 9
Figure 29-2. Hydraulic system No. 1 22
Figure 29-3. Hydraulic system No. 2 23
Figure 29-4. Hydraulic Filter Assemblies 32
Figure 29-5. Hydraulic Pump and Reservoir Hose and Fittings 33
Figure 29-6. Pressure Transmitter 35
Figure 29-7. Collective Hydraulic Cylinder 37
Figure 29-8. Hydraulic cylinder boot 38
Figure 29-9. Cyclic Hydraulic Cylinder 41
Figure 29-10. Tail Rotor Hydraulic Cylinder 43
Figure 29-11. Tail Rotor Hydraulic Cylinder Lever Bearing 44
Figure 29-12. Rotor Brake System 48

LIST OF TABLES

Table 29-1. Allowable leakage for in-service hydraulic components 10
Table 29-2. Troubleshooting 11
Table 29-3. Troubleshooting rotor brake system 47

• COPYRIGHT © 2007 BY DART AEROSPACE LTD. •
THIS DOCUMENT IS PRIVATE AND CONFIDENTIAL AND IS SUPPLIED ON THE EXPRESS CONDITION THAT IT IS NOT TO BE USED FOR ANY PURPOSE OR COPIED OR COMMUNICATED TO ANY OTHER PERSON WITHOUT WRITTEN PERMISSION FROM DART AEROSPACE LTD.

29.1 HYDRAULIC SYSTEM

Two similar but separate hydraulic systems are used to operate flight controls power cylinders (Figure 29-1). Systems 1 and 2 are alike as to their reservoirs, and integrated valve and filter modules which contain system filters, solenoid valves, and relief valves. Although both systems operate three dual servo hydraulic cylinders in main rotor controls, there is no connection between systems because the systems use separate passages and chambers inside each dual cylinder and valve assembly. If one system is disabled, the remaining system can still operate normally. The directional control actuator is operated from system 1.

In normal operation of each system, hydraulic fluid is supplied from a non-pressurized reservoir by gravity feed and suction to a transmission-drive pump. The pump is a variable delivery type with internal pressure compensation, preset to provide 1000 ± 25 PSI (6895 ± 172.38 kPa) output pressure and 6.0 gal. (22.71 L) per minute flow rate at operating rpm, according to system demands. Pump output is delivered to the module and passes through the pressure filter. A relief valve in the module guards the system against excessive pressure, being set to open at 1100 PSI (7585 kPa). The system solenoid valve is normally de-energized and open to the SYS PRESS outlet of the module but can be electrically energized to OFF position by means of the HYDR SYS switch.

Each module has two red indicator buttons for its two filters, and is also electrically connected to a remote warning indicator located in the cabin nose forward of the pilot station. If any of the four filters become partially clogged, differential pressure will cause the red button to extend and the remote indicator to change from green to red or black to white, remaining so until the clogging filter element is cleaned and both indicators are manually reset. Temperature and pressure gage indications for each system are provided by a temperature bulb at the reservoir inlet and a pressure transmitter at the module outlet.

On helicopters S/N 30554 and sub., temperature switches located on both systems 1 and 2 reservoir inlets will illuminate a HYDRAULIC caution segment located on the caution panel when hydraulic fluid temperature reaches 190°F (58°C). Pressure switches located at the module outlets illuminate the same segment light when system pressures drop below 650 PSI (4482 kPa) during normal operation.

On helicopters S/N 30875 and subsequent, a pulsation damper is installed on hydraulic system No. 2 between the hydraulic pump and check valve. The damper will reduce hydraulic system noise in the cabin.

29.2 GENERAL MAINTENANCE PRACTICES

29.2.1 Leakage Limits

Following provides guide lines for allowable external leakage of in-service hydraulic system components, and some methods of measuring such leakage.

29.2.1.1 Scope - Limits described are only for components in service in helicopter hydraulic systems. Intent is to minimize replacement of hydraulic components which are still serviceable.

29.2.1.1.1 These limits may differ from those contained in various specifications for components, which are intended to control quality, assembly, and proper functioning of the components for procurement. Components in service sometimes develop leakage rates in excess of specification limits, without necessarily becoming detrimental to the system or failing to provide reliable operation.

29.2.1.1.2 These limits are not to be used as basis for acceptance or rejection of components of any bench functional test or systems on new helicopters.

29.2.1.1.3 These limits are not applicable to self-contained closed-compartment hydraulic

• COPYRIGHT © 2007 BY DART AEROSPACE LTD. •
THIS DOCUMENT IS PRIVATE AND CONFIDENTIAL AND IS SUPPLIED ON THE EXPRESS CONDITION THAT IT IS NOT TO BE USED FOR ANY PURPOSE OR COPIED OR COMMUNICATED TO ANY OTHER PERSON WITHOUT WRITTEN PERMISSION FROM DART AEROSPACE LTD.

units such as viscous dampers, liquid springs, or oleo struts.

29.2.1.2 Causes of Leakage - Some seepage is normally present, since static or dynamic seals are not functionally perfect, due to such causes as:

29.2.1.2.1 A film of hydraulic fluid being retained by metal surfaces, such as piston rods, and thus carried past seals. This film is necessary for seal lubrication.

29.2.1.2.2 Pressure and temperature variations affecting seals.

29.2.1.2.3 Seals tending to take a permanent set after a period of time.

29.2.1.3 Classification of Leakage - External leakages of hydraulic fluid can be broadly classified as excessive or allowable.

29.2.1.3.1 Excessive Leakage: Fluid leakage such that hydraulic reservoir level may be dangerously lowered or depleted during normal operation, or a fire hazard may be created, or airworthiness of helicopter may be otherwise compromised.

29.2.1.3.2 Allowable Leakage: Fluid leakage such that quantity lost is insignificant, will have no detrimental effect on helicopter operation, and correction does not warrant maintenance time involved.

29.2.1.3.3 General: Leakage usually shows as a seepage, stain, or wet area. It is possible for allowable leakage or seepage to collect in a cavity or depression in adjacent structure over a period of time and falsely indicate excessive leakage. Accumulation on a flat area or a white-painted surface often appears to be excessive, though actually being allowable. However, it is also possible to have enough components with allowable leakages that combined leakage should be classified as excessive.

29.2.1.4 Leakage Checks - Measurement of leakage rates, for classification according to table 29-1, can be performed as follows:

29.2.1.4.1 When hydraulic systems have remained in static un-pressurized condition for an appreciable period of time, leakage checks should not be performed immediately after starting operation. Activate systems and operate components several times, then wipe off any leaked hydraulic fluid before making leakage checks.

29.2.1.4.2 Where location of a component does not permit direct observation, it is possible to measure leakage on a flat surface, either part of structure below or a panel temporarily positioned for that purpose. Wipe surface clean and place a drop of fluid on area, allow to stabilize, then outline area with soft lead pencil before wiping off fluid. Pressurize and cycle component to observe leakage rate, comparing wetting surface to marked one-drop area.

29.2.1.4.3 Where fluid dropping from a component can be directly observed, pressurize and cycle the component until a drop falls free. Continue operating, observing time until next drop to determine leakage rate.

29.2.1.4.4 For tests requiring long periods of time and where fluid can drop, wipe surface clean and dry without using a solvent. Use a clean blotter or white cloth after system has operated or has been idle required period of time.

• COPYRIGHT © 2007 BY DART AEROSPACE LTD. •
THIS DOCUMENT IS PRIVATE AND CONFIDENTIAL AND IS SUPPLIED ON THE EXPRESS CONDITION THAT IT IS NOT TO BE USED FOR ANY PURPOSE OR COPIED OR COMMUNICATED TO ANY OTHER PERSON WITHOUT WRITTEN PERMISSION FROM DART AEROSPACE LTD.

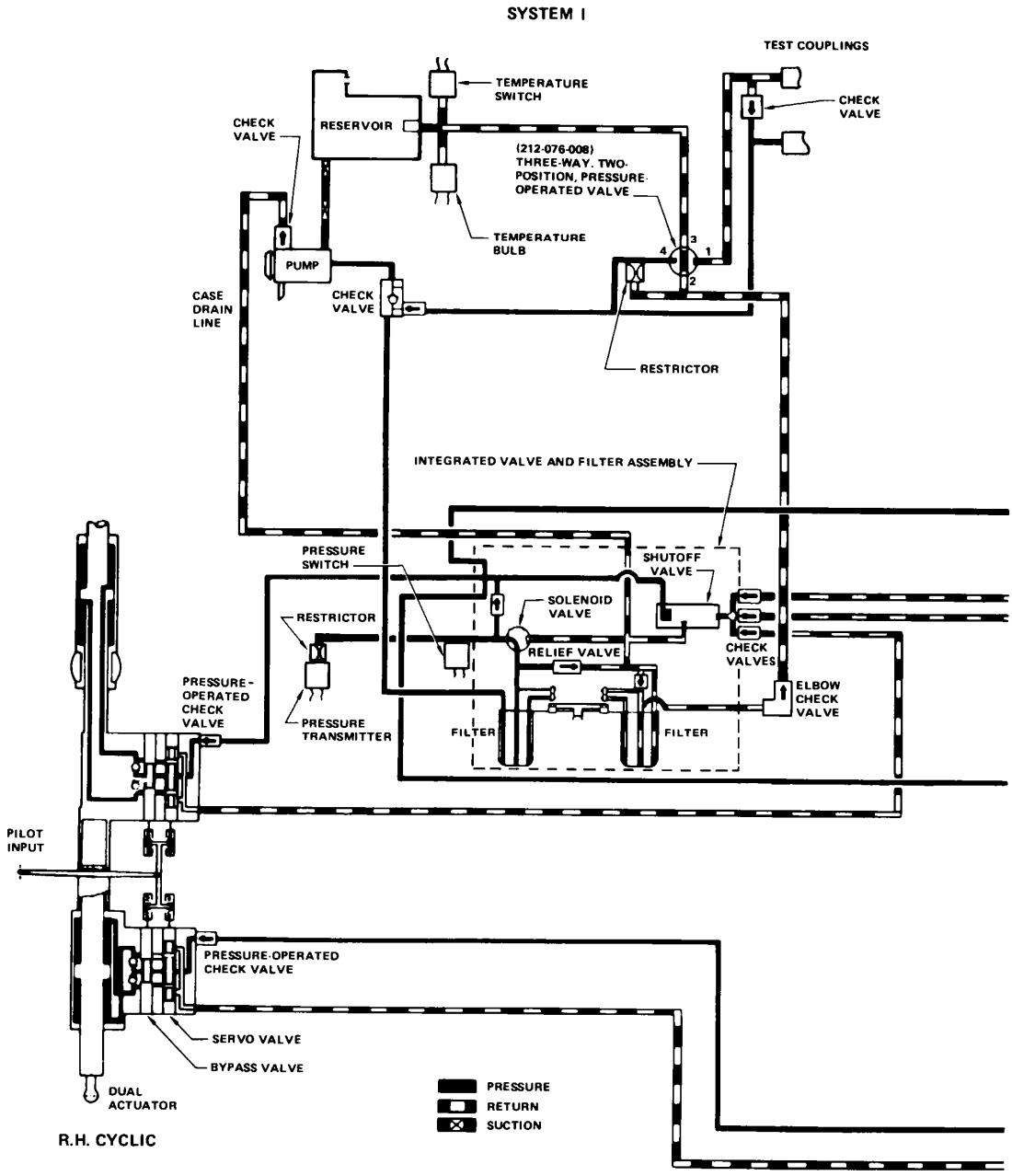

Figure 29-1. Hydraulic schematic (sheet 1 of 4)

• COPYRIGHT © 2007 BY DART AEROSPACE LTD. •
THIS DOCUMENT IS PRIVATE AND CONFIDENTIAL AND IS SUPPLIED ON THE EXPRESS CONDITION THAT IT IS NOT TO BE USED FOR ANY PURPOSE OR COPIED OR COMMUNICATED TO ANY OTHER PERSON WITHOUT WRITTEN PERMISSION FROM DART AEROSPACE LTD.

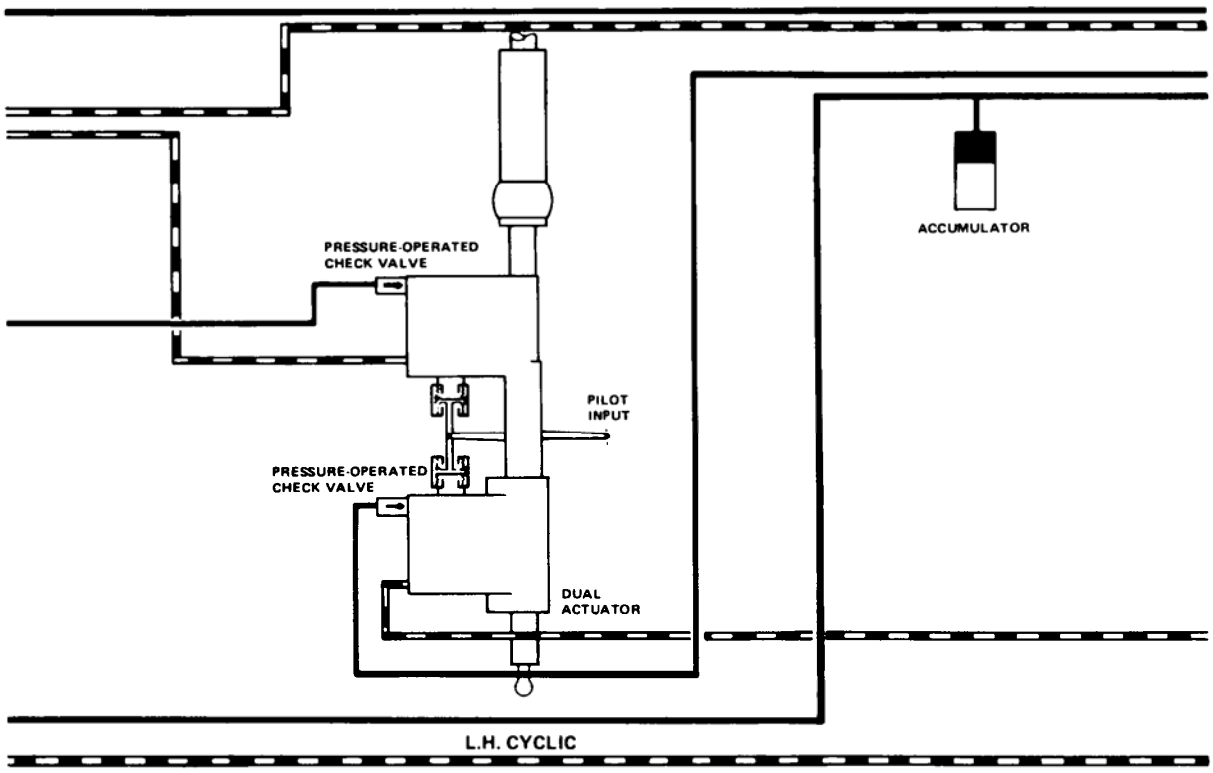

Figure 29-1. Hydraulic schematic (sheet 2 of 4)

• COPYRIGHT © 2007 BY DART AEROSPACE LTD. •
THIS DOCUMENT IS PRIVATE AND CONFIDENTIAL AND IS SUPPLIED ON THE EXPRESS CONDITION THAT IT IS NOT TO BE USED FOR ANY PURPOSE OR COPIED OR COMMUNICATED TO ANY OTHER PERSON WITHOUT WRITTEN PERMISSION FROM DART AEROSPACE LTD.

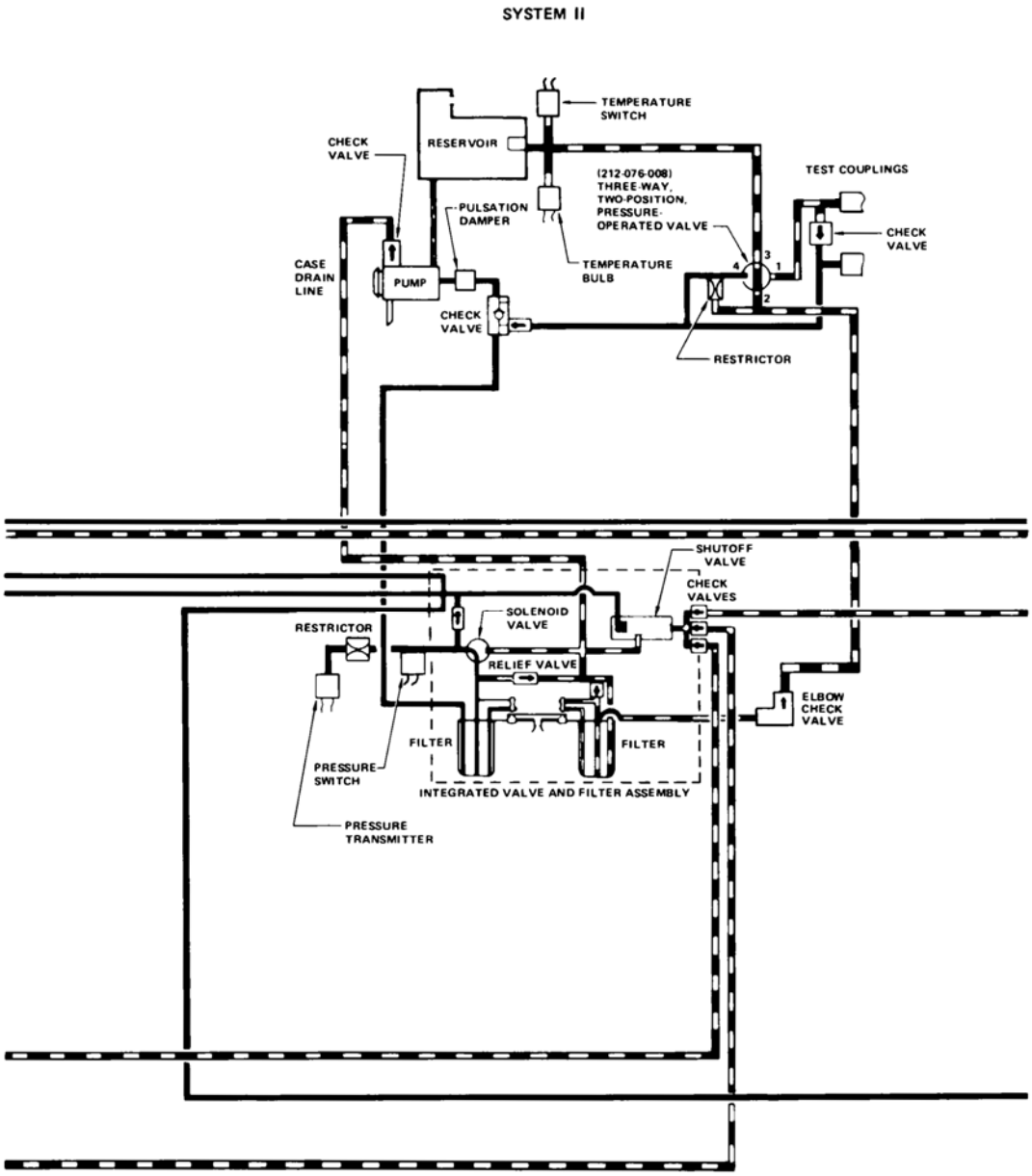

Figure 29-1. Hydraulic schematic (sheet 3 of 4)

• COPYRIGHT © 2007 BY DART AEROSPACE LTD. •
THIS DOCUMENT IS PRIVATE AND CONFIDENTIAL AND IS SUPPLIED ON THE EXPRESS CONDITION THAT IT IS NOT TO BE USED FOR ANY PURPOSE OR COPIED OR COMMUNICATED TO ANY OTHER PERSON WITHOUT WRITTEN PERMISSION FROM DART AEROSPACE LTD.

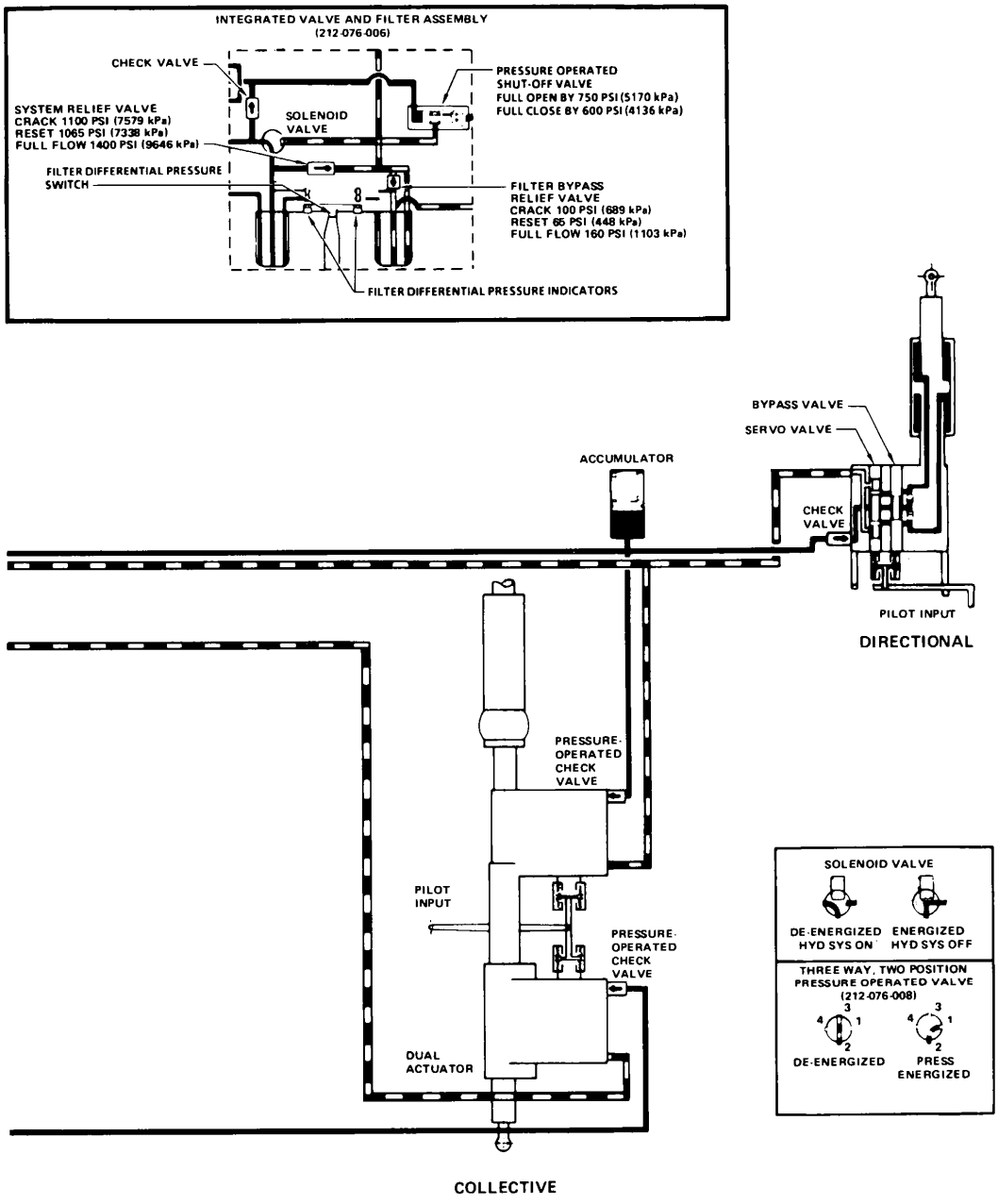

Figure 29-1. Hydraulic schematic (sheet 4 of 4)

• COPYRIGHT © 2007 BY DART AEROSPACE LTD. •
THIS DOCUMENT IS PRIVATE AND CONFIDENTIAL AND IS SUPPLIED ON THE EXPRESS CONDITION THAT IT IS NOT TO BE USED FOR ANY PURPOSE OR COPIED OR COMMUNICATED TO ANY OTHER PERSON WITHOUT WRITTEN PERMISSION FROM DART AEROSPACE LTD.

Table 29-1. Allowable leakage for in-service hydraulic components

Component	Function	Leak Type	Leakage Rate (Max)
Flight	Rod Seal	D	1 drop/20 full stroke cycles
Controls	Rod Seal	S-D	1 drop/15 minutes
Actuators	End Cap	S	2 drops/day
	Valve Input	D	1 drop/5 cycles
		S-D	1 drop/5 minutes
	Pressure switch	S-D	1 drop/5 minutes
	Valve body (weep holes)	S-D	1 drop/5 minutes
Pumps	Output shaft	D	8 drops/minute
		S-D	1 drop/minute
	Housing (mating surface)	S	2 drops/day
Valves	Body (weep holes)	S	2 drops/day
	Manual stem	D	1 drop/5 cycles
		S-D	1 drop/15 minutes
	Dump valve	S	2 drops/day
By-pass Check Valve		D	2 drops/25 cycles
		S	None at static pressure of 5 to 1000 PSI
Fittings	Flared or flare-less	S	None
	Compression seals	S	1 drop/30 min. (less if readily accessible)

NOTES:
1. Leak Types: D = Dynamic
   S = Static
   S-D = Static leakage through dynamic seal
2. Approximately 20 drops = 1 cubic centimeter.
3. Components in static condition, as in parked aircraft, are allowed maximum leakage of two drops per seal or packing per day.

• COPYRIGHT © 2007 BY DART AEROSPACE LTD. •
THIS DOCUMENT IS PRIVATE AND CONFIDENTIAL AND IS SUPPLIED ON THE EXPRESS CONDITION THAT IT IS NOT TO BE USED FOR ANY PURPOSE OR COPIED OR COMMUNICATED TO ANY OTHER PERSON WITHOUT WRITTEN PERMISSION FROM DART AEROSPACE LTD.

29.2.2 Troubleshooting

The following list of probable causes, isolation procedures, and remedies is intended to aid in hydraulic system troubleshooting. The guide should be used with other sources of information such as hydraulic schematic, electrical diagrams, operational check, and other detailed procedures in this chapter.

Table 29-2. Troubleshooting

Indication of Trouble	Probable Cause	Corrective Action
ONE SYSTEM LACKS POWER AND PRESSURE IS LOW.		
Leaks in system.	Visually check for leaks due to loose connections, line rupture, component rupture, or failed seals.	Repair connections; replace faulty lines, hoses, seals or components. Service system and perform operational check.
Pump malfunction.	Check system can be powered by hydraulic test unit.	Replace pump.
System check valve struck closed in pump pressure line.	If operation on hydraulic test unit is normal, but operation with a known serviceable pump remains faulty, check valve may be defective.	Replace check valve.
Reservoir vent obstructed.	If system pressure is intermittently low when operating on pump, though normal with test unit, check reservoir for obstructed vent causing pump cavitation.	Clear reservoir vent screen or replace reservoir. Operationally check for possible pump damage.
System solenoid valve remaining in off position.	Electrically check that solenoid is not energized. If not circuit fault, valve may be mechanically stuck.	Repair electrical circuit, or replace valve and filter assembly.

• COPYRIGHT © 2007 BY DART AEROSPACE LTD. •
THIS DOCUMENT IS PRIVATE AND CONFIDENTIAL AND IS SUPPLIED ON THE EXPRESS CONDITION THAT IT IS NOT TO BE USED FOR ANY PURPOSE OR COPIED OR COMMUNICATED TO ANY OTHER PERSON WITHOUT WRITTEN PERMISSION FROM DART AEROSPACE LTD.

Table 29-2. Troubleshooting (Cont.)

Indication of Trouble	Probable Cause	Corrective Action
ONE SYSTEM LACKS POWER BUT PRESSURE IS NORMAL.		
Pressure operated valve in reservoir return line locked in energized (test coupling) position.	If system normal on test unit but controls not powered by pump operation, valve may be defective.	Replace valve.
Reservoir return port screen clogged.	Visually check reservoir return screen.	Clean screen or replace reservoir.
Pressure operated shutoff valve or internal check valve in integrated valve and filter module malfunctioning.	Disconnect reservoir return line. With system on, move controls and check for steady flow. If not, valve is faulty.	Replace integrated valve and filter module.
PRESSURE FLUCTUATION WITH CONTROLS MOTIONLESS		
Airlock in line between pressure transmitter and restrictor.	Operating on ground test unit, briefly loosen line connection on elbow at P port of pressure transmitter. Tighten connector after bleeding, and recheck pressure indication.	If pressure is steady after bleeding lire, no further action. If fluctuation continues, check transmitter and gage. Replace faulty unit(s).
Reservoir return screen ruptured, or vent screen partially obstructed.	Check for foaming in reservoir after rapid control movements, as indication of return screen damage. Inspect reservoir screens.	Clear obstructed vent or replace reservoir.

• COPYRIGHT © 2007 BY DART AEROSPACE LTD. •
THIS DOCUMENT IS PRIVATE AND CONFIDENTIAL AND IS SUPPLIED ON THE EXPRESS CONDITION THAT IT IS NOT TO BE USED FOR ANY PURPOSE OR COPIED OR COMMUNICATED TO ANY OTHER PERSON WITHOUT WRITTEN PERMISSION FROM DART AEROSPACE LTD.

Table 29-2. Troubleshooting (Cont.)

Indication of Trouble	Probable Cause	Corrective Action
FILTER INDICATORS TRIPPED		
Filters clogged.	If indicator in cabin nose is red or white, check both system filter assemblies for tripped indicators. Manually reset indicators and operate system. Move controls rapidly. If indicators again trip, filters are clogged.	Clean filter elements as required. Reset module indicators and remote indicator.
Module indicators defective.	Module indicators trip with known serviceable filter elements installed, but remote indicators remain green or black and do not extend.	Replace or repair defective filter modules.
Remote indicators defective.	Remote indicators trip (red or white), but module indicators do not trip.	Replace remote indicators. (It is acceptable to return helicopter to service provided the module indicators are inspected daily until remote indicators are replaced).
EITHER HYDRAULIC SYSTEM OVERHEATS.		
	NOTE *System 2 operates at slightly higher temperature than system 1 due to difference in pump rpm.*	
Pump defective, allows increasing pressure.	Use a test gage to check system pressure, 1050 PSI (7240 kPa) maximum.	Replace pump.
System relief valve held fully open.	Check for loss of control response, and for flow through relief valve.	Replace valve and filter module.

• COPYRIGHT © 2007 BY DART AEROSPACE LTD. •
THIS DOCUMENT IS PRIVATE AND CONFIDENTIAL AND IS SUPPLIED ON THE EXPRESS CONDITION THAT IT IS NOT TO BE USED FOR ANY PURPOSE OR COPIED OR COMMUNICATED TO ANY OTHER PERSON WITHOUT WRITTEN PERMISSION FROM DART AEROSPACE LTD.

Table 29-2. Troubleshooting (Cont.)

Indication of Trouble	Probable Cause	Corrective Action
HYDRAULICS AND MASTER CAUTION LIGHTS ON.		
System 1 or 2 overheating.	Check temperature gage for temperature higher than 190°F (88°C).	Refer to EITHER HYDRAULIC SYSTEM OVERHEATS.
System 1 and 2 have low pressure.	Check pressure gage for low pressure below 650 PSI (4482 kPa).	Refer to ONE SYSTEM LACKS POWER AND PRESSURE IS LOW.
Temperature switch malfunctioning.	Temperature gage indicates normal.	Replace switch of each system independently and recheck system.
Pressure switch malfunctioning.	Pressure gage indicates normal.	Replace switch of each system independently and recheck system.
CONTROLS DO NOT OPERATE SMOOTHLY.		
Servo or bypass valves sticking.	With hydraulic pressure off, disconnect control tube from servo input lever of dual actuator. Manually check force required to operate lever 0.070 in. (1.78 mm), riot to exceed 32 oz. (8.90 N). (Reconnect control tube before hydraulic pressure is turned on.)	1. Check lever pivot for binding. Clean or replace bolts. 2. Flush system thoroughly. Recheck operation. 3. Replace seals on servo or by-pass valves, or replace actuator.
Binding in flight control linkage.	Check linkage components for freedom of motion.	Replace defective parts.
INADEQUATE CONTROL RESPONSE.		
Internal leakage past piston in actuator	Check actuator is only partially powered.	Replace servo actuator.
Check valve stuck closed in pressure port of actuator or in return port of integrated valve and filter assembly.	Substitute valve with one known to be serviceable. Operational check system.	Replace check valve.
One of the internal bypass check valves stuck open in actuator.	Check actuator is powered in one direction only.	Replace actuator.

• COPYRIGHT © 2007 BY DART AEROSPACE LTD. •
THIS DOCUMENT IS PRIVATE AND CONFIDENTIAL AND IS SUPPLIED ON THE EXPRESS CONDITION THAT IT IS NOT TO BE USED FOR ANY PURPOSE OR COPIED OR COMMUNICATED TO ANY OTHER PERSON WITHOUT WRITTEN PERMISSION FROM DART AEROSPACE LTD.

Table 29-2. Troubleshooting (Cont.)

Indication of Trouble	Probable Cause	Corrective Action
RESERVOIR OVERFLOWS WHEN USING GROUND TEST UNIT.		
Test unit pressure too low.	Check test unit setting.	Increase test unit pressure above 550 PSI (3792 kPa).
Pressure operated valve malfunction.	Check for increased overflow when flight controls are moved.	Replace valve.
Check valve in pump case drain line closed.	Check for overflow with no control motion.	Replace valve.
System check valve in pump pressure line open.	Check for overflow with no control motion.	Replace valve.
HIGH FREQUENCY VIBRATIONS DUE TO TAIL ROTOR CONTROLS.		
Stiffness of binding in action of tail rotor control hydraulic cylinder.	1. Cylinder input lever binding on spacer at bell crank. (Move lever laterally to check.)	1. Polish spacer OD until free in lever bearing.
	2. Cylinder trunnions binding in mounting plates. (Move cylinder laterally 0.003 to 0.050 in. (0.076 to 1.27 mm).	2. Polish trunnion plate bushings ID for free fit.
	3. Cylinder input lever binding at pivot.	3. Repair cylinder assembly per overhaul instructions.
Binding in tail rotor controls.	1. Check pitch control tube for binding in bearing in left side of tail rotor gearbox.	1. Remove pitch change tube. Clean ID of bearing and OD of tube. Install and recheck.
	2. Check lever on left side of tail rotor gearbox for stiffness of lower end bearing in alignment motion. It stiffness occurs, twist attached link to turn nut end of bolt upward. Pull nut downward with a spring scale. If force to move bearing exceeds 10 lbs. (44.48 N), lever is unserviceable.	2. Replace unserviceable lever.

• COPYRIGHT © 2007 BY DART AEROSPACE LTD. •
THIS DOCUMENT IS PRIVATE AND CONFIDENTIAL AND IS SUPPLIED ON THE EXPRESS CONDITION THAT IT IS NOT TO BE USED FOR ANY PURPOSE OR COPIED OR COMMUNICATED TO ANY OTHER PERSON WITHOUT WRITTEN PERMISSION FROM DART AEROSPACE LTD.

Table 29-2. Troubleshooting (Cont.)

Indication of Trouble	Probable Cause	Corrective Action
MOTORING SERVO ACTUATOR IN TAIL ROTOR CONTROLS.		
Hoses restraining or causing action of actuator valve on tail rotor hydraulic cylinder.	Inspect hoses for position through full operating range.	Position hoses for least restraint.
COLLECTIVE STICK LIGHT OR HEAVY IN DOWNSTROKE.		
Collective minimum friction incorrect.	Check friction preload on collective stick.	Adjust minimum friction (Chapter 67).
Balance spring on collective cylinder defective.	Check condition of balance spring on input lever of collective hydraulic cylinder.	Replace detective spring.
INABILITY TO MAKE NORMAL RIGHT AND LEFT TURNS IN FLIGHT.		
Tail rotor controls rigging incorrect.	Check tail rotor rigging.	Rig tail rotor controls.
BINDING IN TAIL ROTOR MOVEMENT.		
Pitch change tube binding in bearing at left side of tail rotor gearbox.	Manually check tube for free movement through bearing.	Clean surfaces of tube and bearing.
Binding bearing in lower end of lever on left side of tail rotor gearbox.	Manually check bearing.	Replace lever.

• COPYRIGHT © 2007 BY DART AEROSPACE LTD. •
THIS DOCUMENT IS PRIVATE AND CONFIDENTIAL AND IS SUPPLIED ON THE EXPRESS CONDITION THAT IT IS NOT TO BE USED FOR ANY PURPOSE OR COPIED OR COMMUNICATED TO ANY OTHER PERSON WITHOUT WRITTEN PERMISSION FROM DART AEROSPACE LTD.

29.2.3 Flushing

MATERIALS REQUIRED

NUMBER	NOMENCLATURE
C-002 or C-072	Hydraulic Fluid
C-405	Lockwire

NOTE

Refer to Chapter 12 for information on usage and mixing of hydraulic fluid (C-002) and hydraulic fluid (C-072).

SPECIAL TOOLS REQUIRED

NUMBER	NOMENCLATURE
—	Hydraulic test stand

29.2.3.1 The entire system shall be thoroughly flushed to ensure removal of all foreign matter from lines and components.

NOTE

If system 1 is contaminated, remove system 1 hydraulic pump, cyclic, collective and anti-torque actuators. If system 2 is contaminated, remove system 2 hydraulic pump, cyclic and collective actuators. Attach statement to each component stating reason for removal and send to overhaul facility for evaluation.

29.2.3.1.1 Fill helicopter reservoir to capacity with hydraulic fluid (C-002) or hydraulic fluid (C-072) and keep filled during system flushing.

29.2.3.1.2. Disconnect hoses from cyclic, collective, and anti-torque actuators.

29.2.3.1.3 Connect hose ends together using MS21916D6-4 reducers.

29.2.3.1.4 Cap open actuator ports to prevent contamination of systems.

29.2.3.1.5 Remove filter element and discard. Reinstall filter bowl.

29.2.3.1.6 Connect test unit to system 1 through ground test provisions located on left side of helicopter just aft of F.S. 144 and below W.L. 22.

29.2.3.1.7 Accomplish a complete visual inspection of hydraulic system to ensure all components and lines are securely attached and appear capable of satisfactory operation.

CAUTION

THROUGHOUT FUNCTIONAL TESTS, DO NOT OPERATE BELOW 550 PSIG (3792 kPa). HOWEVER, IF IT BECOMES NECESSARY TO REDUCE SYSTEM PRESSURE TO ZERO, DE-ENERGIZE TEST UNIT FLOW TO HELICOPTER AND REDUCE SYSTEM PRESSURE. FAILURE TO DO THIS WILL RESULT IN OVER-FILLING OF THE SYSTEM RESERVOIR. TESTS REQUIRING DEACTIVATION OF A SYSTEM SHALL BE ACCOMPLISHED BY DISCONNECTING TEST UNIT FROM THAT SYSTEM.

29.2.3.1.8 Set test unit pressure relief valve for a cracking pressure of 2100 PSIG (14450 kPa) and set test unit to a pressure sufficient to maintain a 6.0 gpm (22.71 1pm) minimum flow through the system.

NOTE

Test unit reservoir shall be used in this flushing procedure.

29.2.3.1.9 Maintain this pressure setting for at least five minutes while observing all portions of system for external leakage. Take appropriate action to correct any leakage.

29.2.3.1.10 Decrease system pressure to 9 PSIG (62.05 kPa).

29.2.3.2 Disconnect test unit from system 1 and connect system 2.

29.2.3.3 Repeat step 29.2.3.1.1 through 29.2.3.1.10.

NOTE

The systems may be under pressure caused by the lock-out valve and accumulator. A small container should be available to catch a small amount of oil when disconnecting hoses.

• COPYRIGHT © 2007 BY DART AEROSPACE LTD. •
THIS DOCUMENT IS PRIVATE AND CONFIDENTIAL AND IS SUPPLIED ON THE EXPRESS CONDITION THAT IT IS NOT TO BE USED FOR ANY PURPOSE OR COPIED OR COMMUNICATED TO ANY OTHER PERSON WITHOUT WRITTEN PERMISSION FROM DART AEROSPACE LTD.

29.2.3.4 After flushing procedure is completed, remove dust caps from actuators. Reconnect hoses to cyclic, collective and anti-torque actuators. Remove filter bowl, drain fluid and clean bowl, replace element and bowl, and torque bolt 100 to 140 in-Lbs. (11.30 to 15.82 Nm) and secure with lockwire (C-405).

29.2.4 Operational Check

MATERIALS REQUIRED

NUMBER	NOMENCLATURE
C-002 or C-072	Hydraulic Fluid
C-405	Lockwire
C-304	Solvent

NOTE

Refer to Chapter 12 for information on usage and mixing of hydraulic fluid (C-002) and hydraulic fluid (C-072).

SPECIAL TOOLS REQUIRED

NUMBER	NOMENCLATURE
—	Hydraulic test stand

WARNING

UNLESS OTHERWISE SPECIFIED, CLEANING OF HYDRAULIC COMPONENTS SHALL BE ACCOMPLISHED WITH SOLVENT (C-304) ONLY. DO NOT USE ALCOHOL.

This procedure is for ground operational check of hydraulic systems to aid in troubleshooting, or to test for proper functioning after maintenance.

29.2.4.1 Provide a portable hydraulic test stand conforming to the following requirements:

29.2.4.1.1 Thoroughly cleaned and serviced with hydraulic fluid (C-002) or hydraulic fluid (C-072).

29.2.4.1.2 Equipped with a 10-micron absolute maximum particle size metal filter through which all fluid passes before leaving unit and a 10-micron filter on return line to test unit before fluid returns to test stand.

29.2.4.1.3 Capable of producing pressure to 1400 PSIG, and a minimum flow rate of 6.0 gallons per minute.

29.2.4.1.4 Equipped with a calibrated pressure gage with minimum 1500 PSIG (10343 kPa) capacity.

29.2.4.2 Visually inspect entire hydraulic system of helicopter to ensure all lines and components are secure and appear capable of operation. Obtain access by opening transmission cowling, doors on front and sides of pylon structure in cabin, and door to fuselage compartment in which tail rotor control actuator is located.

29.2.4.3 Prepare portable hydraulic test stand for operation: Relief valve set for 1300 PSIG (8964 kPa) pressure; pump set for at least 6 gallons per minute flow.

29.2.4.4 Remove test coupling access doors below left cargo door opening, at approximately F.S. 150 for system 1 and F.S. 134 for system 2.

CAUTION

THROUGHOUT FUNCTIONAL TESTS, DO NOT OPERATE BELOW 550 PSIG (3792 kPa) PRESSURE. IF NECESSARY TO REDUCE SYSTEM PRESSURE TO ZERO, DE-ENERGIZE TEST UNIT FLOW TO HELICOPTER BEFORE REDUCING SYSTEM PRESSURE. FAILURE TO DO THIS MAY RESULT IN OVER-FILLING SYSTEM RESERVOIR. TESTS REQUIRING DEACTIVATION OF A SYSTEM SHALL BE ACCOMPLISHED BY DISCONNECTING HYDRAULIC TEST STAND FROM THAT SYSTEM.

29.2.4.5 Connect hydraulic test stand to both systems. (If test unit does not have dual hoses, perform test on each system separately.) Apply 1000 PSIG (6895 kPa) for at least 15 minutes,

• COPYRIGHT © 2007 BY DART AEROSPACE LTD. •
THIS DOCUMENT IS PRIVATE AND CONFIDENTIAL AND IS SUPPLIED ON THE EXPRESS CONDITION THAT IT IS NOT TO BE USED FOR ANY PURPOSE OR COPIED OR COMMUNICATED TO ANY OTHER PERSON WITHOUT WRITTEN PERMISSION FROM DART AEROSPACE LTD.

while performing the following:

29.2.4.5.1 Observe all parts of system for evidence of leakage, taking corrective action as necessary.

29.2.4.5.2 Slowly cycle all controls through full motions. Check all moving parts have clearance so there is no fouling or binding. Give particular attention to flexible connections to ensure hoses are not pinched or twisted and vibration does not tend to loosen fittings.

29.2.4.5.3 Work out any air from system by actuating each of flight controls through at least ten full strokes, cyclic and collective sticks on either system, and tail rotor pedals on system 1.

29.2.4.6 Check system pressure gages as follows:

29.2.4.6.1 Close HYD SYS 1 and HYD SYS 2 circuit breakers. Place BATTERY switch ON. Energize inverter with INV 1 switch.

29.2.4.6.2 Slowly decrease and increase test unit pressure in range between 550 and 1000 PSIG (3792 to 6895 kPa), observing both hydraulic pressure gages for smooth operation throughout range.

29.2.4.7 On helicopters 30554 and sub., check system pressure caution lights as follows:

29.2.4.7.1 Slowly decrease hydraulic test stand pressure for each system independently, and check NO.1 HYDRAULIC and NO.2 HYDRAULIC and MASTER CAUTION segments illuminate when hydraulic test stand pressure drops below 650 PSI (4482 kPa).

29.2.4.7.2 Slowly increase hydraulic test stand pressure for each system independently, and check NO.1 HYDRAULIC and NO.2 HYDRAULIC and MASTER CAUTION segments extinguish when hydraulic test stand pressure rises above 750 PSI (5171 kPa).

29.2.4.8 Check single-system operation, if not already accomplished in performing step 29.2.4.5, as follows:

29.2.4.8.1 With hydraulic test stand connected to system 2 only, apply 1000 PSIG (6895 kPa) pressure from hydraulic test stand. Observe system 2 pressure gage indicates 1000 PSIG (6895 kPa) while system 1 gage indicates zero. Move flight controls, checking cyclic and collective controls are smooth, positive and fully powered but directional (tail rotor) controls are not powered.

29.2.4.8.2 With hydraulic test stand connected to system 1 only, apply 1000 PSIG (6895 kPa) hydraulic test stand pressure and observe system 1 pressure gage indicates 1000 PSIG (6895 kPa) while system 2 gages indicates zero. Move flight controls, checking cyclic, collective and directional controls are smooth, positive, and fully powered.

29.2.4.8.3 Shut off hydraulic test stand flow and reduce pressure to zero.

NOTE

If operational check-out is satisfactory, proceed to step 10. When further checks for proper operation of pressure operated shut-off valves and system relief valves are required, perform step 29.2.4.9.

29.2.4.9 With hydraulic test stand connected to one system only, monitor pressure gage of test unit while performing following checks:

29.2.4.9.1 Apply 550 PSIG (3792 kPa) test unit pressure. Station a person to check action of flight controls. Slowly increase hydraulic test stand pressure. Controls should become fully powered (directional controls will not be powered if system 2 is being checked) before pressure exceeds 900 PSIG (6205 kPa) for 212-076-006-3 valve assemblies, or 900 PSIG (6205 kPa) for 212-076-006-7 valve assemblies, indicating pressure operated shut-off valve in system module has opened.

29.2.4.9.2 Stop all movement of flight controls. Continue increasing pressure. Listen, or feel, valve module for evidence of system relief valve

• COPYRIGHT © 2007 BY DART AEROSPACE LTD. •
THIS DOCUMENT IS PRIVATE AND CONFIDENTIAL AND IS SUPPLIED ON THE EXPRESS CONDITION THAT IT IS NOT TO BE USED FOR ANY PURPOSE OR COPIED OR COMMUNICATED TO ANY OTHER PERSON WITHOUT WRITTEN PERMISSION FROM DART AEROSPACE LTD.

opening between 1100 and 1300 PSIG (7585 and 8964 kPa), and being fully open by 1400 PSIG (9653 kPa).

CAUTION

DO NOT INCREASE PRESSURE ABOVE 1400 PSIG (9653 kPa).

29.2.4.9.3 Slowly reduce pressure. Observe for evidence of system relief valve closing at not less then 1065 PSIG (7343 kPa).

29.2.4.9.4 Continue reducing pressure while checking action of flight controls. Controls should lose hydraulic power between 600 and 750 PSIG (4137 to 5171 kPa), indicating pressure-operated shut-off valve has closed.

29.2.4.9.5 Shut off hydraulic test stand flow and reduce pressure to zero. Remove filter bowls and drain all fluid. Replace filter elements and replace filter bowls. Tighten filter bowls 100 to 140 in.lbs. (11.30 to 15.82 Nm) and secure to housing using lockwire (0-405).

29.2.4.9.6 Apply 1000 PSIG (6895 kPa) hydraulic test stand pressure and bleed air from system by cycling all controls through full travel a minimum of 10 cycles.

29.2.4.9.7 Shut off test unit flow and reduce pressure to zero. Disconnect test unit from system. If required, connect unit to untested system and repeat checks.

29.2.4.10 On helicopter S/N 30554 and sub., perform steps 29.2.4.9.1 through 29.2.4.9.5, noting in step 29.2.4.9.4 NO.1 HYDRAULIC and NO.2 HYDRAULIC and MASTER CAUTION segments should illuminate at 650 PSI (4481 kPa).

29.2.4.11 When checks are completed, place BATTERY and INV 1 switches OFF. Install access doors.

29.2.5 Operational Check (Helicopter Power)

MATERIALS REQUIRED

NUMBER	NOMENCLATURE
C-002 or C-072	Hydraulic Fluid

NOTE

Refer to Chapter 12 for information on usage and mixing of hydraulic fluid (C-002) and hydraulic fluid (C-072).

CAUTION

ENGINE START AND RUNUP SHALL BE ACCOMPLISHED BY AUTHORIZED PERSONNEL ONLY.

29.2.5.1 Start engine (FMS-D212-725-1). When main rotor has turned ten revolutions, shut down engine.

29.2.5.2 Replenish reservoir with hydraulic fluid (C-002) or hydraulic fluid (C-072) (Chapter 12).

29.2.5.3 Start engine. Operate at idle (FMS-D212-725-1).

29.2.5.4 Slowly move pilot cyclic, collective, and directional controls to allowable limits for ground operation. Repeat at least ten times to bleed air from system.

29.2.5.5 Shut down engine and replenish reservoir (Chapter 12).

• COPYRIGHT © 2007 BY DART AEROSPACE LTD. •
THIS DOCUMENT IS PRIVATE AND CONFIDENTIAL AND IS SUPPLIED ON THE EXPRESS CONDITION THAT IT IS NOT TO BE USED FOR ANY PURPOSE OR COPIED OR COMMUNICATED TO ANY OTHER PERSON WITHOUT WRITTEN PERMISSION FROM DART AEROSPACE LTD.

29.3 HYDRAULIC SYSTEM COMPONENTS

29.3.1 Reservoir Assemblies

The reservoirs for system 1 and system 2 are identical, non-pressurized, magnesium alloy units with an approximate capacity per unit of 5.25 (2.48L) pints at overflow, 2.75 (l.30L) pints at refill level (Chapter 12). Each unit features a fluid level sight gage, filler cap and screen, screened vent, scupper with overboard drain line, and connections for supply to pump and return from system. System 1 and 2 reservoirs are located on the right and left side respectively of cabin roof under forward pylon fairing.

29.3.1.1 Removal

29.3.1.1.1 Open forward pylon fairing.

29.3.1.1.2 Drain fluid from reservoir into a container by disconnecting hose from suction outlet fitting (Figures 29-2 and 29-3).

29.3.1.1.3 Disconnect return and scupper drain lines.

29.3.1.1.4 Cap open fittings and lines.

29.3.1.1.5 Detach reservoir from roof structure by removing four bolts from mounting lugs.

29.3.1.1.6 If replacing reservoir, remove fittings from suction and scupper drain ports for use in new reservoir.

29.3.1.1.7 Cover open ports.

NOTE

Tee in return port is a special fitting with a baffle screen, and is supplied with reservoir.

29.3.1.2 Inspection

29.3.1.2.1 Visually inspect filler cap adapter and strainer screen for cleanliness, damage, and corrosion.

29.3.1.2.2 Inspect fluid level sight plug for scratches, cracks, checks, internal staining, and other defects of transparency which could prevent proper observation of fluid level.

29.3.1.2.3 Inspect vent screen for cleanliness, damage, and corrosion. Damage to screen resulting in enlarged holes is not acceptable.

29.3.1.2.4 Inspect screen on inner end of RETURN port fitting for cleanliness and damage. Damage to screen resulting in enlarged holes is not acceptable.

29.3.1.2.5 Inspect bosses for damaged threads and seal contact surfaces.

29.3.1.3 Repair

MATERIALS REQUIRED

NUMBER	NOMENCLATURE
C-002 or C-072	Hydraulic Fluid
C-201	Primer
C-304	Solvent
C-405	Lockwire

NOTE

Refer to Chapter 12 for information on usage and mixing of hydraulic fluid (C-002) and hydraulic fluid (C-072).

29.3.1.3.1 Replace filler cap strainer if corroded or damaged as follows:

29.3.1.3.1.1 Unscrew adapter from filler opening and lift out strainer.

29.3.1.3.1.2 Clean threads of adapter and opening with solvent (C-304).

29.3.1.3.1.3 Place strainer into reservoir.

29.3.1.3.1.4 Coat adapter threads with primer (C-201) and screw adapter into reservoir.

CAUTION

EXERCISE CARE TO PREVENT FOREIGN MATERIAL FROM ENTERING RESERVOIR WHILE SCREEN IS REMOVED.

• COPYRIGHT © 2007 BY DART AEROSPACE LTD. •
THIS DOCUMENT IS PRIVATE AND CONFIDENTIAL AND IS SUPPLIED ON THE EXPRESS CONDITION THAT IT IS NOT TO BE USED FOR ANY PURPOSE OR COPIED OR COMMUNICATED TO ANY OTHER PERSON WITHOUT WRITTEN PERMISSION FROM DART AEROSPACE LTD.

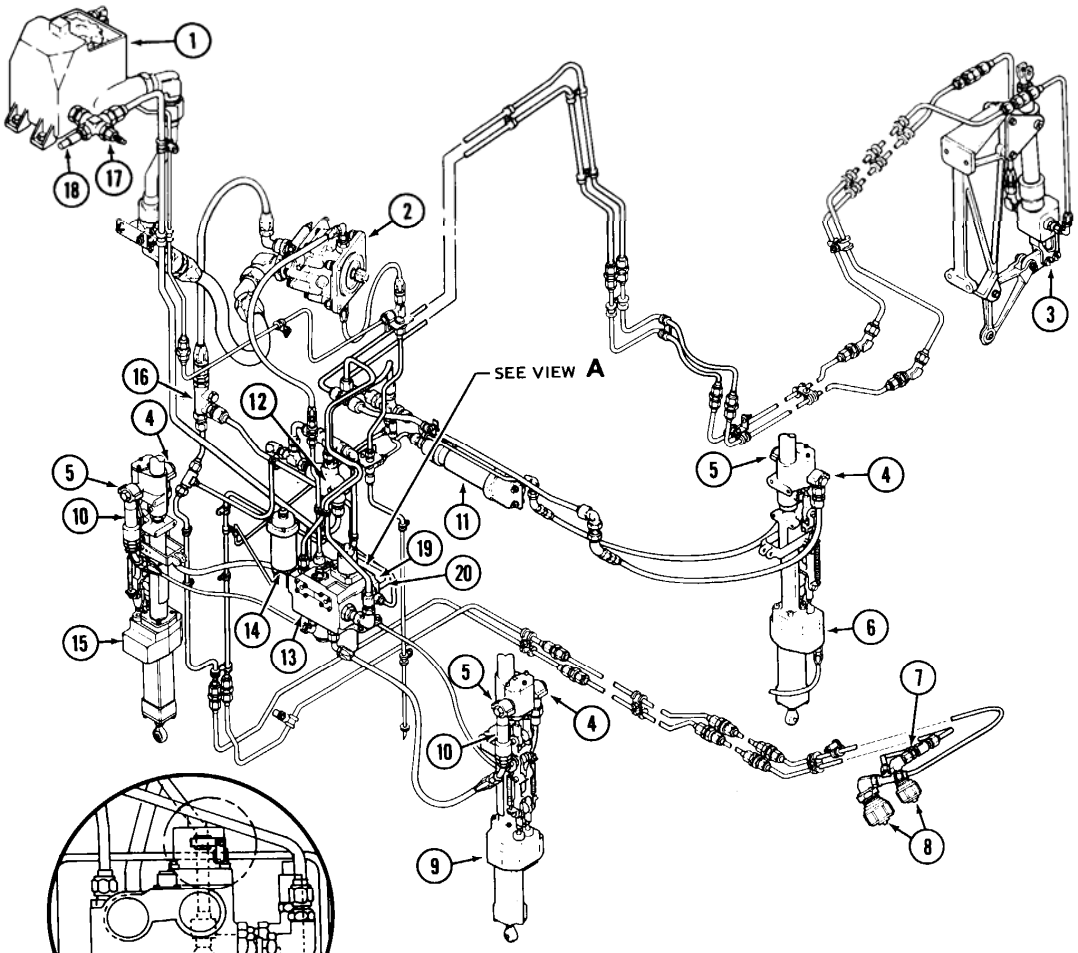

1. Reservoir
2. Hydraulic pump
3. Tail rotor hydraulic power cylinder
4. Elbow
5. Special elbow
6. Collective hydraulic power cylinder
7. Check valve
8. External hydraulic power disconnects
9. Cyclic hydraulic power cylinder
10. By-pass check valve
11. Accumulator
12. Three-way, two-position pressure operated valve
13. Integrated valve and filter assembly
14. Pressure transmitter
15. Cyclic hydraulic power cylinder
16. Check valve
17. Temp bulb
18. Temp switch
19. Elbow
20. Elbow check valve (1)

NOTE

(1) **Helicopters modified in accordance with TB212-80-43, and helicopter S/N 31109 and subsequent have a check valve elbow.**

Figure 29-2. Hydraulic system No. 1

• COPYRIGHT © 2007 BY DART AEROSPACE LTD. •
THIS DOCUMENT IS PRIVATE AND CONFIDENTIAL AND IS SUPPLIED ON THE EXPRESS CONDITION THAT IT IS NOT TO BE USED FOR ANY PURPOSE OR COPIED OR COMMUNICATED TO ANY OTHER PERSON WITHOUT WRITTEN PERMISSION FROM DART AEROSPACE LTD.

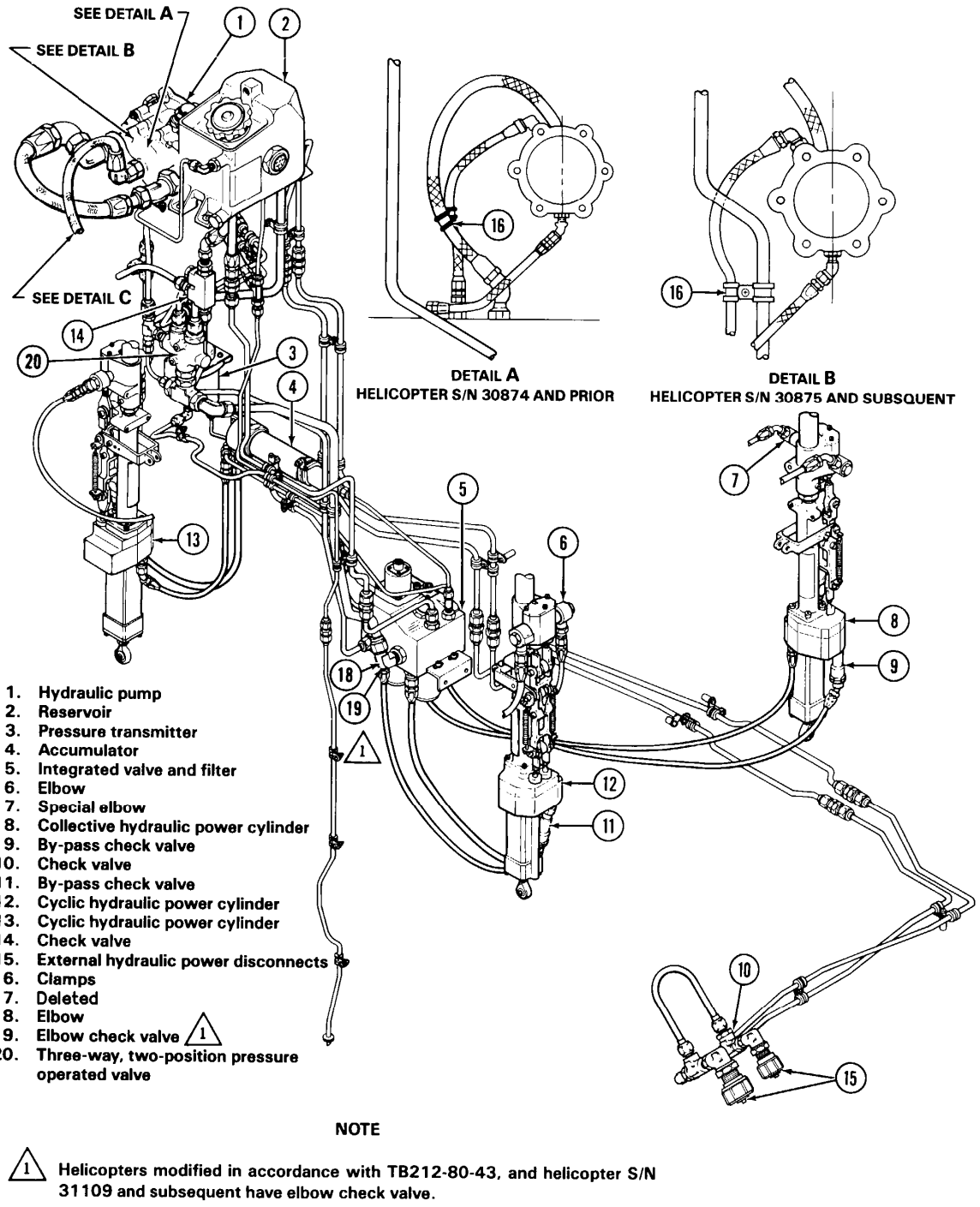

Figure 29-3. Hydraulic system No. 2

• COPYRIGHT © 2007 BY DART AEROSPACE LTD. •
THIS DOCUMENT IS PRIVATE AND CONFIDENTIAL AND IS SUPPLIED ON THE EXPRESS CONDITION THAT IT IS NOT TO BE USED FOR ANY PURPOSE OR COPIED OR COMMUNICATED TO ANY OTHER PERSON WITHOUT WRITTEN PERMISSION FROM DART AEROSPACE LTD.

29.3.1.3.2 If vent screen is unserviceable due to damage or clogging, replace as follows:.

29.3.1.3.2.1 Carefully drill out area where screen is staked in position.

29.3.1.3.2.2 Position new vent in reservoir and stake in three places to secure screen.

29.3.1.3.3 Replace sight plug as follows:

29.3.1.3.3.1 Remove lockwire, plug, and packing. Discard packing.

29.3.1.3.3.2 Lubricate new packing with hydraulic fluid (C-002) or hydraulic fluid (C-072) and position packing on serviceable plug.

29.3.1.3.3.3 Install new plug and packing into boss, tighten, and lockwire (C-405) to fitting in adjacent RETURN boss.

29.3.1.3.4 Replace any damaged fitting. Replace reservoir if cracked or otherwise unserviceable.

29.3.1.4 Installation

MATERIALS REQUIRED

NUMBER	NOMENCLATURE
C-405	Lockwire

29.3.1.4.1 If reservoir is being replaced, install elbow fittings in suction and scupper drain ports. Verify plug is installed in drain port, and tee fitting in return port.

29.3.1.4.2 Position reservoir to mounting points on cabin roof.

NOTE: #2 Reservoir Repositioned as per SI. 205-37

29.3.1.4.3 Align holes and install bolts through four mounting lugs, with thin aluminum alloy washers under bolt heads.

29.3.1.4.4 Install nuts and aluminum alloy washers on lower ends of two aft bolts. Secure drain plug to drilled head of aft outboard bolt with lockwire (C-405).

29.3.1.4.5 Connect system return line, pump supply hose, and scupper drain.

29.3.1.4.6 Service hydraulic system (Chapter 12).

29.3.1.4.7 Perform operational run. Check hydraulic system for leaks and normal operation.

29.3.1.4.8 Close pylon fairing.

29.3.2 Integrated Valve and Filter Assemblies

The integrated valve and filter assemblies are two independent modules. Each module contains system relief valve, solenoid valve, and system pressure and return filters. The filter assemblies are equipped with visual differential pressure indicators that warn of a clogging condition. To facilitate inspection of both module filters, an additional indicator is mounted on right side nose frame. With electrical and hydraulic systems operating, the indicator (viewed through right nose window looking inboard) indicates normal filtering if a green dot or all black indication is present or a red dot or three white sections will be present indicating a clogged condition. Connections are provided on each module for cylinder pressure and return lines, pump pressure line, system return line and pressure transmitter line. The valve and filter assemblies are located inside the pylon support and are accessible through a door on front of the support. System 1 module is on front of the lift beam and system 2 module is on left inside pylon support below and aft of the lift beam. The low pressure switch warns of low system pressure by illuminating the NO.1 HYDRAULIC and NO.2 HYDRAULIC segments located in the caution panel.

• COPYRIGHT © 2007 BY DART AEROSPACE LTD. •
THIS DOCUMENT IS PRIVATE AND CONFIDENTIAL AND IS SUPPLIED ON THE EXPRESS CONDITION THAT IT IS NOT TO BE USED FOR ANY PURPOSE OR COPIED OR COMMUNICATED TO ANY OTHER PERSON WITHOUT WRITTEN PERMISSION FROM DART AEROSPACE LTD.

29.3.2.1 Removal

MATERIALS REQUIRED	
NUMBER	**NOMENCLATURE**
C-428	Caps and/or Plugs

NOTE

Valve and filter modules will normally be left in place, since filters, valves, and other components can be replaced without removing valve and filter assembly.

29.3.2.1.1 Remove access door from front of pylon support in cabin.

29.3.2.1.2 Disconnect electrical connectors.

29.3.2.1.3 Disconnect tubes and hoses from valve and filter assembly (Item 13, Figure 29-2 or Item 5, Figure 29-3).

29.3.2.1.4 Remove four bolts and four washers securing valve and filter assembly.

29.3.2.15 Remove valve and filter assembly.

29.3.2.1.6 Cover open lines with caps and/or plugs (C-428) to prevent contamination.

29.3.2.2 Inspection

29.3.2.2.1 Inspect housing for cracks or other visible damage so as to be unserviceable.

29.3.2.2.2 Inspect for excessive leaks.

29.3.2.2.3 Inspect pressure switch for damage.

29.3.2.2.4 Inspect fittings for damaged threads.

29.3.2.3 Repair

29.3.2.3.1 Replace any defective fittings.

29.3.2.3.2 Replace packings at reassembly.

29.3.2.3.3 Clean filter elements (paragraph 29.3.2.5). Reset clogged filter indicator.

29.3.2.4 Installation

29.3.2.4.1 Position valve and filter assembly (Item 13, Figure 29-2 or Item 5, Figure 29.3).

29.3.2.4.2 Secure in place using four bolts and four washers.

29.3.2.4.3 Connect tubes and hoses to valve and filter assembly.

29.3.2.4.4 Connect electrical connectors.

29.3.3 Hydraulic Filter Assemblies

The pressure and return filter assemblies are located on the bottom of the integrated valve and filter assembly body. Each filter assembly contains: a filter bowl, a filter element, two packings and a retainer. The hydraulic filter element removes the particles from the hydraulic fluid. These particles come from usual and sometimes unusual, wear of hydraulic components. Examine, clean or replace filter element when impending bypass indicator extends (pops), or at recommended inspection intervals (Chapter 5).

29.3.3.1 Hydraulic Filter Assemblies (P/N 212-076-006-007) - Removal

29.3.3.1.1 Remove the forward pylon fairing (Chapter 52).

29.3.3.1.2 Remove lockwire from filter bowl (6, Figure 29-3) and valve body (1).

29.3.3.1.3 Remove filter bowl (6).

NOTE

If filter element is to be used again, put it in a new clean plastic bag to prevent contamination.

• COPYRIGHT © 2007 BY DART AEROSPACE LTD. •
THIS DOCUMENT IS PRIVATE AND CONFIDENTIAL AND IS SUPPLIED ON THE EXPRESS CONDITION THAT IT IS NOT TO BE USED FOR ANY PURPOSE OR COPIED OR COMMUNICATED TO ANY OTHER PERSON WITHOUT WRITTEN PERMISSION FROM DART AEROSPACE LTD.

29.3.3.1.4 Remove retainer (3) and filter element (5).

29.3.3.1.5 Remove and discard packings (2 and 4).

29.3.3.2 Hydraulic Filter Assemblies (P/N 212-076-006-105) - Removal

29.3.3.2.1 Remove the forward pylon fairing (Chapter 52).

29.3.3.2.2 Press the ratchet lever (10, Figure 29-4) and remove filter bowl (11).

NOTE

If filter element is to be used again, put it in a new clean plastic bag to prevent contamination.

29.3.3.2.3 Remove retainer (14) and filter element (12).

29.3.3.2.4 Remove and discard packings (13 and 15).

29.3.3.3 Hydraulic Filter Assemblies (P/N 212-076-006-007) - Inspection

29.3.3.3.1 Examine the hydraulic fluid in the filter bowl (6, Figure 29-4) for condition and for particles.

29.3.3.3.2 If the hydraulic fluid is dirty, discolored, or contains bubbles, flush the system (paragraph 29.2.3).

29.3.3.3.3 Examine valve body (1), retainer (3), and filter bowl (6) for scratches, nicks, dents, thread damage, and damage to the lockwire holes.

29.3.3.3.4 If the lockwire holes in the valve body (1) are damaged, replace the valve body.

29.3.3.3.5 Examine impending bypass indicator button (7) to make sure it is not in the impending bypass position.

29.3.3.3.6 Examine the filter element (5) for general condition. Pay particular attention to damage to the filtering surfaces and bonding of the end caps to the filtering core.

29.3.3.3.7 Replace filter element (5) if any abnormality is found.

29.3.3.3.8 inspect the filter element (5) core for metal, brass, and aluminum contamination.

29.3.3.3.9 Replace the non-cleanable filter element (5) P/N 205-076-034-003 if contamination is found and flush the hydraulic system.

29.3.3.4 Hydraulic Filter Assemblies (P/N 212-076-006-105) - Inspection

29.3.3.4.1 Examine the hydraulic fluid in filter bowl (11, Figure 29-4) for condition and for particles.

29.3.3.4.2 If the hydraulic fluid is dirty, discolored, or contains bubbles, flush the system (paragraph 29-5).

29.3.3.4.3 Examine valve body (8), retainer (14), and filter bowl (11) for scratches, nicks, dents and thread damage.

29.3.3.4.4 Examine ratchet lever (10) for wear and security of installation.

29.3.3.4.5 Examine ratchet teeth on filter bowl (11) for wear.

29.3.3.4.6 Examine impending bypass indicator button (9) to make sure it is not in the extended position.

29.3.3.4.7 Examine the filter element (12) for general condition. Pay particular attention to damage to the filtering surfaces and bonding of the end caps to the filtering core.

29.3.3.4.8 Replace filter element (12) if any abnormality is found.

29.3.3.4.9 Inspect the filter element (12) for

• COPYRIGHT © 2007 BY DART AEROSPACE LTD. •
THIS DOCUMENT IS PRIVATE AND CONFIDENTIAL AND IS SUPPLIED ON THE EXPRESS CONDITION THAT IT IS NOT TO BE USED FOR ANY PURPOSE OR COPIED OR COMMUNICATED TO ANY OTHER PERSON WITHOUT WRITTEN PERMISSION FROM DART AEROSPACE LTD.

metal, brass, and aluminum contamination.

29.3.3.4.10 Replace the non-cleanable filter element (12) P/N 205-076-034-003 if contamination is found and flush the hydraulic system.

29.3.3.5 Hydraulic Filter Assemblies - Cleaning

MATERIALS REQUIRED

NUMBER	NOMENCLATURE
C-002 or C-072	Hydraulic Fluid
C-003	Turbine Fuel
C-304	Drycleaning Solvent
C-355	Detergent

NOTE

Refer to Chapter 12 for information on usage and mixing of hydraulic fluid (C-002) and hydraulic fluid (C-072).

CAUTION

CLEAN HYDRAULIC COMPONENTS WITH DRYCLEANING SOLVENT (C-304) ONLY. DO NOT USE ALCOHOL.

NOTE

Discard contaminated non-cleanable P/N 205-076-034-003 filter elements
Examine filters for 'X's inscribed on the filter. If there are three 'X's inscribed on filter element P/N 205-076-034-007, discard filter.

29.3.3.5.1 Use a suitable clean container large enough to hold cleanable filter element (5, Figure 29-4) P/N 205-076-034-007.

29.3.3.5.2 Pour enough of one of the following fluids to cover filter element (5): hydraulic fluid (C-002) or hydraulic fluid (C-072), drycleaning fluid solvent (C-304), 0.5% of detergent (C-355) dissolved in clean warm water, or turbine fuel (C-003).

29.3.3.5.3 Cap or plug both ends of the filter element (5) to prevent contamination migration into filter element.

NOTE

Discard cleanable filter element P/N 205-076-034-007 after three cleaning events

29.3.3.5.4 Insert cleanable filter element (5) only into container and vigorously agitate the filter in the cleaning fluid.

29.3.3.5.5 Attach air hose with a nozzle and rubber grommet to the filter element (5) to prevent air from escaping.

CAUTION

USE NO MORE THAN 10 TO 15 PSI (68.95 TO 103.42 kPa) AIR PRESSURE SO AS NOT TO DAMAGE THE FILTER ELEMENT

29.3.3.5.6 Using no more than 10 to 15 PSI (68.95 to 103.42 kPa) air pressure, slowly backflush the cleaning fluid through the filter element (5) a maximum of three times until there is no indication of contamination.

NOTE

Discard cleanable filter element P/N 205-076-034-007 after three cleaning events.

29.3.3.5.7 Make an 'X' on bottom of filter element (5) for each cleaning event.

29.3.3.5.8 Rinse the filter element (5) with clean hydraulic fluid (C-002) or hydraulic fluid (C-072) to remove traces of the cleaning fluid.

29.3.3.5.9 Dry filter element (5) using filtered, compressed air. If element is not going to be installed immediately, put it in a new plastic bag to prevent contamination.

29.3.3.5.10 Rinse filter bowl (5) with clean hydraulic fluid (C-002) or hydraulic fluid (C-072).

• COPYRIGHT © 2007 BY DART AEROSPACE LTD. •
THIS DOCUMENT IS PRIVATE AND CONFIDENTIAL AND IS SUPPLIED ON THE EXPRESS CONDITION THAT IT IS NOT TO BE USED FOR ANY PURPOSE OR COPIED OR COMMUNICATED TO ANY OTHER PERSON WITHOUT WRITTEN PERMISSION FROM DART AEROSPACE LTD.

CHAPTER 29 – HYDRAULIC SYSTEM (29-00-00)

29.3.3.6 Hydraulic Filter Assemblies (P/N 212-076-006-007) - Installation

MATERIALS REQUIRED	
NUMBER	**NOMENCLATURE**
C-002 or C-072	Hydraulic Fluid
C-405	Lockwire

NOTE

Refer to Chapter 12 for information on usage and mixing of hydraulic fluid (C-002) and hydraulic fluid (C-072).

NOTE

Lubricate all packings, retainers and threads with hydraulic fluid (C-002) or hydraulic fluid (C-072) before installation.

CAUTION

DO NOT USE NON-CLEANABLE P/N 205-076-034-003 AND CLEANABLE P/N 205-076-034-007 FILTER ELEMENTS IN THE SAME SYSTEM. DO NOT MIX.

29.3.3.6.1 Lubricate packing (2, Figure 29-4) with hydraulic fluid (C-002) or hydraulic fluid (C-072).

29.3.3.6.2 Install packing (2) and retainer (3) in valve body (1).

29.3.3.6.3 Lubricate packing (4) with clean hydraulic fluid (C-002) or hydraulic fluid (C-072).

29.3.3.6.4 Install packing (4) in filter element (5).

29.3.3.6.5 Install filter element (5) into filter bowl (6).

29.3.3.6.6 Fill filter bowl (6) half full with clean hydraulic fluid (C-002) or hydraulic fluid (C-072).

29.3.3.6.7 Lubricate threads of filter bowl (6) with clean hydraulic fluid (C-002) or hydraulic fluid (C-072).

29.3.3.6.8 Install filter bowl (6) in valve body (1).

CAUTION

DO NOT EXCESSIVELY TIGHTEN THE LOCKWIRE ON FILTER BODY AND FILTER BOWL. DAMAGE TO THE LOCKWIRE HOLES CAN OCCUR.

29.3.3.6.9 Carefully secure filter bowl (6) to valve body (1) with lockwire (C-405).

29.3.3.6.10 Install the forward pylon fairing (Chapter 52)

29.3.3.6.11 During initial run-up, check for leaks.

29.3.3.7 Hydraulic Filter Assemblies (P/N 212-076-006-105) - Installation

MATERIALS REQUIRED	
NUMBER	**NOMENCLATURE**
C-002 or C-072	Hydraulic Fluid

NOTE

Refer to Chapter 12 for information on usage and mixing of hydraulic fluid (C-002) and hydraulic fluid (C-072).

CAUTION

DO NOT USE NON-CLEANABLE P/N 205-076-034-003 AND CLEANABLE P/N 205-076-034-007 FILTER ELEMENTS IN THE SAME SYSTEM. DO NOT MIX.

29.3.3.7.1 Lubricate packing (15, Figure 29-4) with hydraulic fluid (C-002) or hydraulic fluid (C-072).

29.3.3.7.2 Install packing (15) and retainer (14) in valve body (8).

29.3.3.7.3 Lubricate packing (13) with clean hydraulic fluid (C-002) or hydraulic fluid (C-072).

29.3.3.7.4 Install packing (13) in filter element (12).

• COPYRIGHT © 2007 BY DART AEROSPACE LTD. •
THIS DOCUMENT IS PRIVATE AND CONFIDENTIAL AND IS SUPPLIED ON THE EXPRESS CONDITION THAT IT IS NOT TO BE USED FOR ANY PURPOSE OR COPIED OR COMMUNICATED TO ANY OTHER PERSON WITHOUT WRITTEN PERMISSION FROM DART AEROSPACE LTD.

29.3.3.7.5 Install filter element (12) into filter bowl (11).

29.3.3.7.6 Fill filter bowl (11) half full with clean hydraulic fluid (C-002) or hydraulic fluid (C-072).

29.3.3.7.7 Lubricate threads of filter bowl (11) with clean hydraulic fluid (C-002) or hydraulic fluid (C-072).

29.3.3.7.8 Install filter bowl (11) in valve body (8).

29.3.3.7.9 Make sure the ratchet lever (10) is well engaged in the ratchet teeth of filter bowl. (11).

29.3.3.7.10 Install the forward pylon fairing (Chapter 52).

29.3.3.7.11 During initial run-up, check for leaks.

29.3.4 Hydraulic System Accumulators

Hydraulic systems 1 and 2 each contain one accumulator connected in pressure line of upper or lower cylinders, depending on system. Each unit consists of a spring-loaded piston enclosed in a cylindrical body. The maintain pressure on fluid for irreversible operation and to make up any leakage past seals. The units are horizontally mounted to aft side of lift beam. System 1 accumulator is located above system 2 accumulator.

29.3.4.1 Hydraulic System Accumulators - Removal

MATERIALS REQUIRED

NUMBER	NOMENCLATURE
C-428	Caps and/or Plugs

29.3.4.1.1 Place suitable container to catch a small amount of fluid.

29.3.4.1.2 To release pressure with minimum spraying of fluid, slowly open pressure line connections from tee fitting at lower end of accumulator.

29.3.4.1.3 Cover open lines with caps and/or plugs (C-428).

29.3.4.1.4 Remove screw from clamp at lower end, and two bolts from upper end to detach accumulator from support brackets. Remove clamp.

29.3.4.2 Hydraulic System Accumulators - Installation

29.3.4.2.1 Place clamp on accumulator. Install fittings using new packings.

29.3.4.2.2 Position accumulator to support brackets. Install tow bolts at upper end and clamp attaching screw at lower end.

29.3.4.2.3 Connect tubes to tee fitting.

29.3.5 Hydraulic Pump (System 1)

System 1 hydraulic pump is installed on transmission sump case (Chapter 63). The pump is an axial type rated at 6.0 gal. per minute at 1000 ±25 PSI (6890 ±172 kPa) at operating speed.

29.3.5.1 Removal

29.3.5.1.1 Remove forward pylon fairing and access panel on right side of pylon support structure inside cabin area.

29.3.5.1.2 Loosen connection of hoses on pump to break torque but not to point of leaking.

29.3.5.1.3 Disconnect hoses at ends opposite hydraulic pump.

29.3.5.1.4 Remove nuts and washers from four studs at pump flange. Pull pump and gasket outward off studs. Place pump, with hoses attached, in container large enough to hold fluid contents of reservoir and hoses.

• COPYRIGHT © 2007 BY DART AEROSPACE LTD. •
THIS DOCUMENT IS PRIVATE AND CONFIDENTIAL AND IS SUPPLIED ON THE EXPRESS CONDITION THAT IT IS NOT TO BE USED FOR ANY PURPOSE OR COPIED OR COMMUNICATED TO ANY OTHER PERSON WITHOUT WRITTEN PERMISSION FROM DART AEROSPACE LTD.

29.3.5.1.5 Disconnect hoses from pump, draining fluid from reservoir and hoses.

29.3.5.1.6 Cap open lines and fittings. Cover open port in transmission case.

29.3.5.1.7 If replacing pump, remove fittings and check valve for use on new assembly. Discard gasket.

29.3.5.2 Inspection

29.3.5.2.1 Inspect pump for damage and leakage.

29.3.5.2.2 Inspect fittings for damaged threads.

29.3.5.2.3 Inspect check valve for damage and proper operation.

29.3.5.2.4 Inspect splines and mounting stud for damage.

29.3.5.3 Repair

29.3.5.3.1 Replace damaged studs and fittings as necessary.

29.3.5.3.2 Replace check valve if there is evidence of malfunction.

29.3.5.3.3 Replaced damaged or malfunctioning pump.

29.3.5.4 Installation

MATERIALS REQUIRED

NUMBER	NOMENCLATURE
C-002 or C-072	Hydraulic Fluid
C-007	Bearing Grease

NOTE

Refer to Chapter 12 for information on usage and mixing of hydraulic fluid (C-002) and hydraulic fluid (C-072).

CAUTION

DO NOT LUBRICATE SPLINES FOR PUMPS P/N 731634 (PV3-044-8A) OR 212-076-010-101 WITH NON-METALLIC COUPLING IN STALLED.

29.3.5.4.1 If replacing pump, install elbow fittings in suction port, and unions in pressure, case drain, and seal drain ports. Use new packings.

29.3.5.4.2 Place gasket over drive quill studs.

NOTE

If pump shaft splines are made of nonmetallic (plastic) material, lubrication is not required.

29.3.5.4.3 For pump with metallic splines, lubricate splines with a thin even coating of bearing grease (0-007).

CAUTION

ENSURE PUMP CASE IS FULL OF FLUID PRIOR TO INSTALLATION.

29.3.5.4.4 Fill pump with hydraulic fluid (C-002) or hydraulic fluid (C-072) through case drain port.

29.3.5.4.5 Position pump with seal drain down. Engage shaft in splines of drive quill shaft and mounting flange over studs. Install a nut and two aluminum washers on each stud. Tighten nuts evenly.

29.3.5.4.6 Connect hoses to fittings at suction, pressure, case drain, and seal drain ports.

29.3.5.4.7 Service hydraulic system with hydraulic fluid (C-002) or hydraulic fluid (C-072).

29.3.5.4.8 Perform operational check (paragraph 29.2.4 or 29.2.5).

29.3.5.4.9 Check for leaks. Install access door and close cowling.

• COPYRIGHT © 2007 BY DART AEROSPACE LTD. •
THIS DOCUMENT IS PRIVATE AND CONFIDENTIAL AND IS SUPPLIED ON THE EXPRESS CONDITION THAT IT IS NOT TO BE USED FOR ANY PURPOSE OR COPIED OR COMMUNICATED TO ANY OTHER PERSON WITHOUT WRITTEN PERMISSION FROM DART AEROSPACE LTD.

29.3.6 Hydraulic Pump (System 2)

System 2 pump is identical to system 1 pump. System 2 pump is installed on front of transmission main case.

29.3.6.1 Removal

29.3.6.1.1 Open transmission cowling to gain access to pump which is located between and below both hydraulic reservoirs at helicopter center line. Place suitable containers below pump to catch spilled fluid.

29.3.6.1.2 Remove fluid from system 2 reservoir using a suction gun.

29.3.6.1.3 Disconnect hoses from fittings on pump. Cap fittings and ends of hoses.

29.3.6.1.4 Remove nuts and washers from six studs at pump flange. Pull pump and gasket outward off studs. Discard gasket.

29.3.6.1.5 If replacing pump, remove fittings for use on new assembly. Cover open ports.

29.3.6.2 Inspection

Refer to paragraph 29.3.5.2.

29.3.6.3 Repair

Refer to paragraph 29.3.5.3.

29.3.6.4 Installation

MATERIALS REQUIRED

NUMBER	NOMENCLATURE
C-002 or C-072	Hydraulic Fluid
C-007	Bearing Grease

NOTE

Refer to Chapter 12 for information on usage and mixing of hydraulic fluid (C-002) and hydraulic fluid (C-072).

29.3.6.4.1 If replacing pump, install 90° elbow fittings in suction port, and unions in pressure, case drain, and seal drain ports. Use new packings.

29.3.6.4.2 Place gasket over drive quill studs.

CAUTION

DO NOT LUBRICATE SPLINES FOR PUMPS P/N 731634 (PV3-044-8A) OR 212-076-010-101 WITH NON-METALLIC COUPLING IN STALLED.

29.3.6.4.3 For pump with metallic splines, lubricate splines with a thin even coating of bearing grease (C-007).

CAUTION

ENSURE PUMP CASE IS FULL OF FLUID PRIOR TO INSTALLATION.

29.3.6.4.4 Fill pump with hydraulic fluid (C-002) or hydraulic fluid (C-072) through case drain port.

29.3.6.4.5 Position pump with seal drain down. Engage shaft in splines of drive quill shaft and mounting flange over studs. Install a nut and two aluminum alloy washers on each stud. Tighten nuts evenly.

29.3.6.4.6 Connect hoses to fittings at suction pressure, case drain, and seal drain ports (Figure 29-4).

29.3.6.4.7 Service hydraulic system with hydraulic fluid (C-002) or hydraulic fluid (C-072).

29.3.6.4.8 Perform operational check (paragraph 29.2.3 or 29.2.4).

29.3.6.4.9 Check for leaks. Close transmission cowling.

• COPYRIGHT © 2007 BY DART AEROSPACE LTD. •
THIS DOCUMENT IS PRIVATE AND CONFIDENTIAL AND IS SUPPLIED ON THE EXPRESS CONDITION THAT IT IS NOT TO BE USED FOR ANY PURPOSE OR COPIED OR COMMUNICATED TO ANY OTHER PERSON WITHOUT WRITTEN PERMISSION FROM DART AEROSPACE LTD.

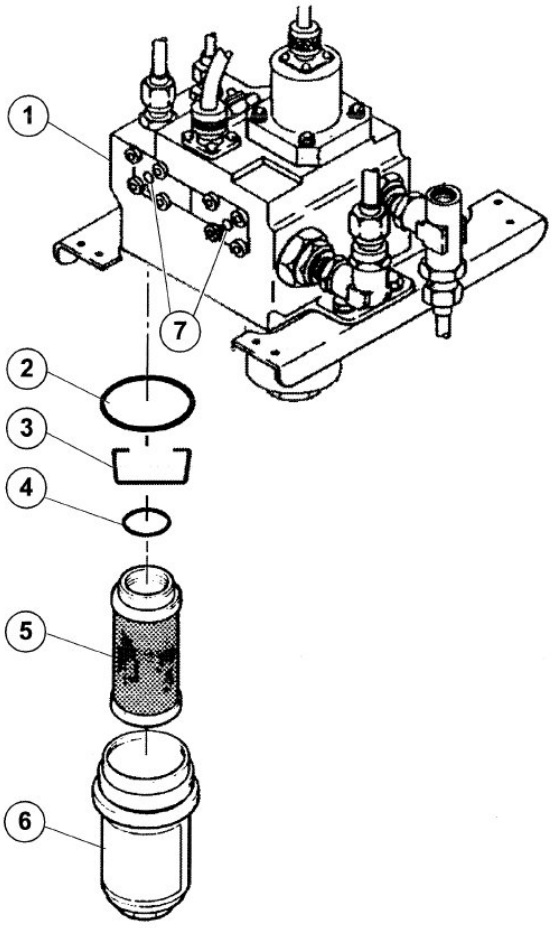

INTEGRATED VALVE AND FILTER ASSEMBLY
(P/N 212-076-006-007)

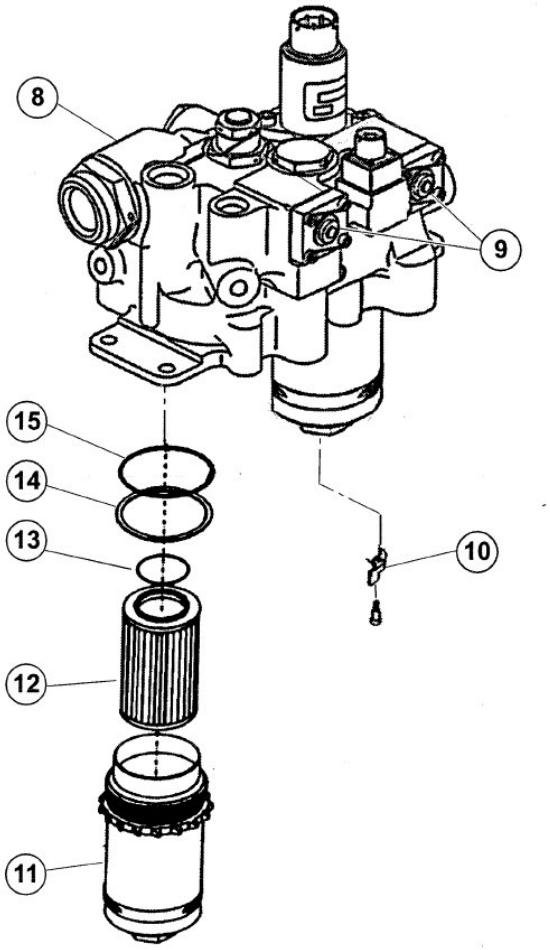

INTEGRATED VALVE AND FILTER ASSEMBLY
(P/N 212-076-006-105)

1. Valve body
2. Packing
3. Retainer
4. Packing
5. Filter element
6. Filter bowl
7. Indicator button
8. Valve body
9. Indicator button
10. Ratchet lever
11. Filter bowl
12. Filter element
13. Packing
14. Retainer
15. Packing

Figure 29-4. Hydraulic Filter Assemblies

• COPYRIGHT © 2007 BY DART AEROSPACE LTD. •
THIS DOCUMENT IS PRIVATE AND CONFIDENTIAL AND IS SUPPLIED ON THE EXPRESS CONDITION THAT IT IS NOT TO BE USED FOR ANY PURPOSE OR COPIED OR COMMUNICATED TO ANY OTHER PERSON WITHOUT WRITTEN PERMISSION FROM DART AEROSPACE LTD.

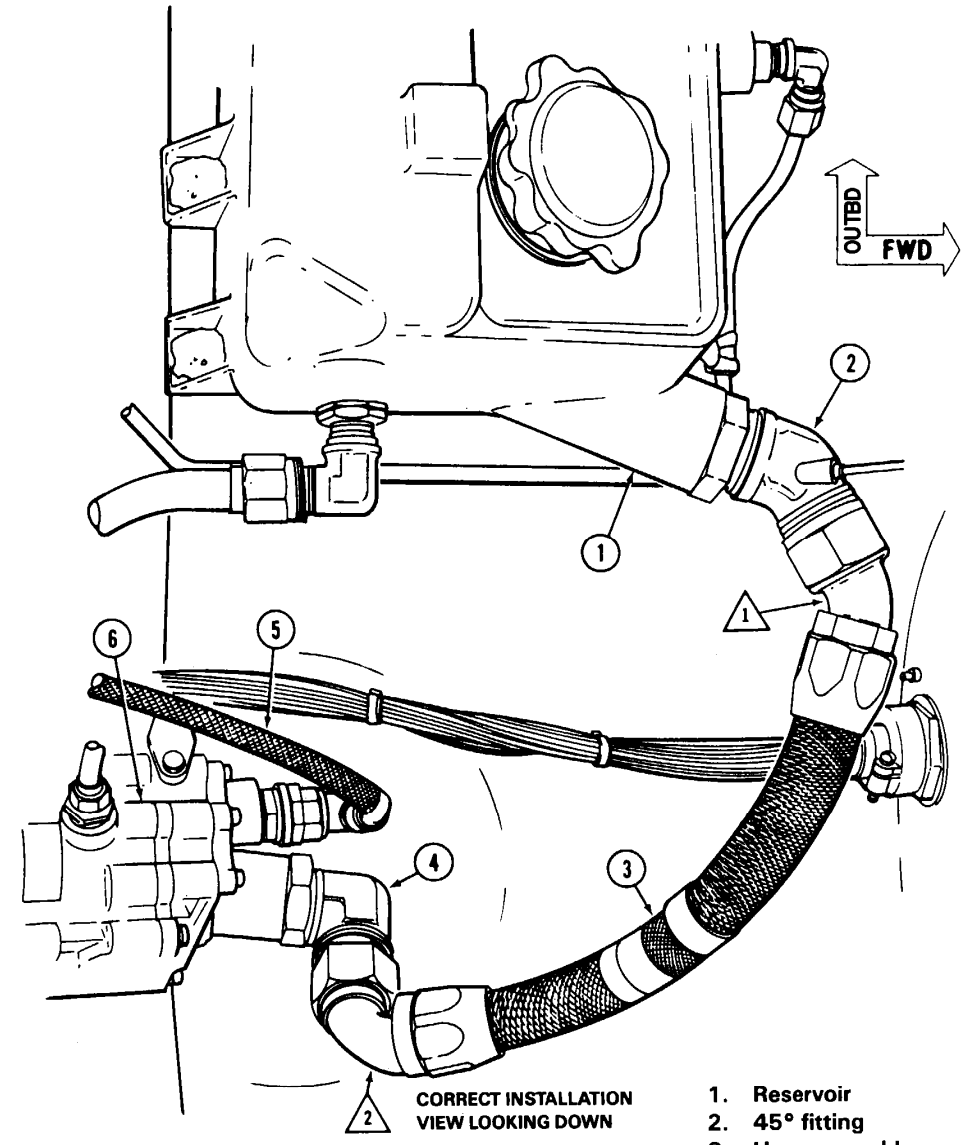

Figure 29-5. Hydraulic Pump and Reservoir Hose and Fittings

• COPYRIGHT © 2007 BY DART AEROSPACE LTD. •
THIS DOCUMENT IS PRIVATE AND CONFIDENTIAL AND IS SUPPLIED ON THE EXPRESS CONDITION THAT IT IS NOT TO BE USED FOR ANY PURPOSE OR COPIED OR COMMUNICATED TO ANY OTHER PERSON WITHOUT WRITTEN PERMISSION FROM DART AEROSPACE LTD.

29.3.7 Pressure Transmitter

Hydraulic system No. 1 (Figure 29-6) and hydraulic system No. 2 (Figure 29-3) have pressure transmitters installed in the compartment below the transmission.
Pressure sensed by the transmitters is transmitted to instruments on the pilot instrument panel.

NOTE
Except as noted, the following procedures are the same for hydraulic systems No. 1 and No. 2.

29.3.7.1 Removal

29.3.7.1.1 Remove access panel on forward side of pylon structure for hydraulic system No. 1.

29.3.7.1.2 Disconnect electrical connector (8, Figure 29-6).

NOTE
Drain tube (10) is not installed on helicopters with transmitter APTE-139-1500SG.

29.3.7.1.3 Disconnect tubes (9 and 10), if installed.

29.3.7.1.4 Plug open tubes to prevent contamination.

29.3.7.1.5 Remove screws (7), thin aluminum washers (6), and pressure transmitter (4).

29.3.7.1.6 Remove restrictor from pressure transmitter (4) (hydraulic system No. 1).

29.3.7.2 Inspection

29.3.7.2.1 Inspect pressure transmitter (4, Figure 29-5) for damage or signs of leakage.

29.3.7.3 Installation

NOTE
Hydraulic system No. 1 restrictor is installed on pressure transmitter.

29.3.7.3.1 Place pressure transmitter (4, Figure 29-6) into lift beam bracket (5) and secure with screws (7) and thin aluminum washers (6).

29.3.7.3.2 Install restrictor on pressure transmitter (4) (hydraulic system No. 1).

NOTE
Drain tube (10) is not installed on helicopters with transmitter APTE-139-1500SG.

29.3.7.3.3 Connect tube(s) (9 and 10), if installed.

29.3.7.3.4 Connect electrical connector (8).

29.3.7.3.5 Service reservoir (1) (Chapter 12).

29.3.7.3.6 Perform ground run and verify system functions normally and no leaks are present.

29.3.7.3.7 Install access panels.

• COPYRIGHT © 2007 BY DART AEROSPACE LTD. •
THIS DOCUMENT IS PRIVATE AND CONFIDENTIAL AND IS SUPPLIED ON THE EXPRESS CONDITION THAT IT IS NOT TO BE USED FOR ANY PURPOSE OR COPIED OR COMMUNICATED TO ANY OTHER PERSON WITHOUT WRITTEN PERMISSION FROM DART AEROSPACE LTD.

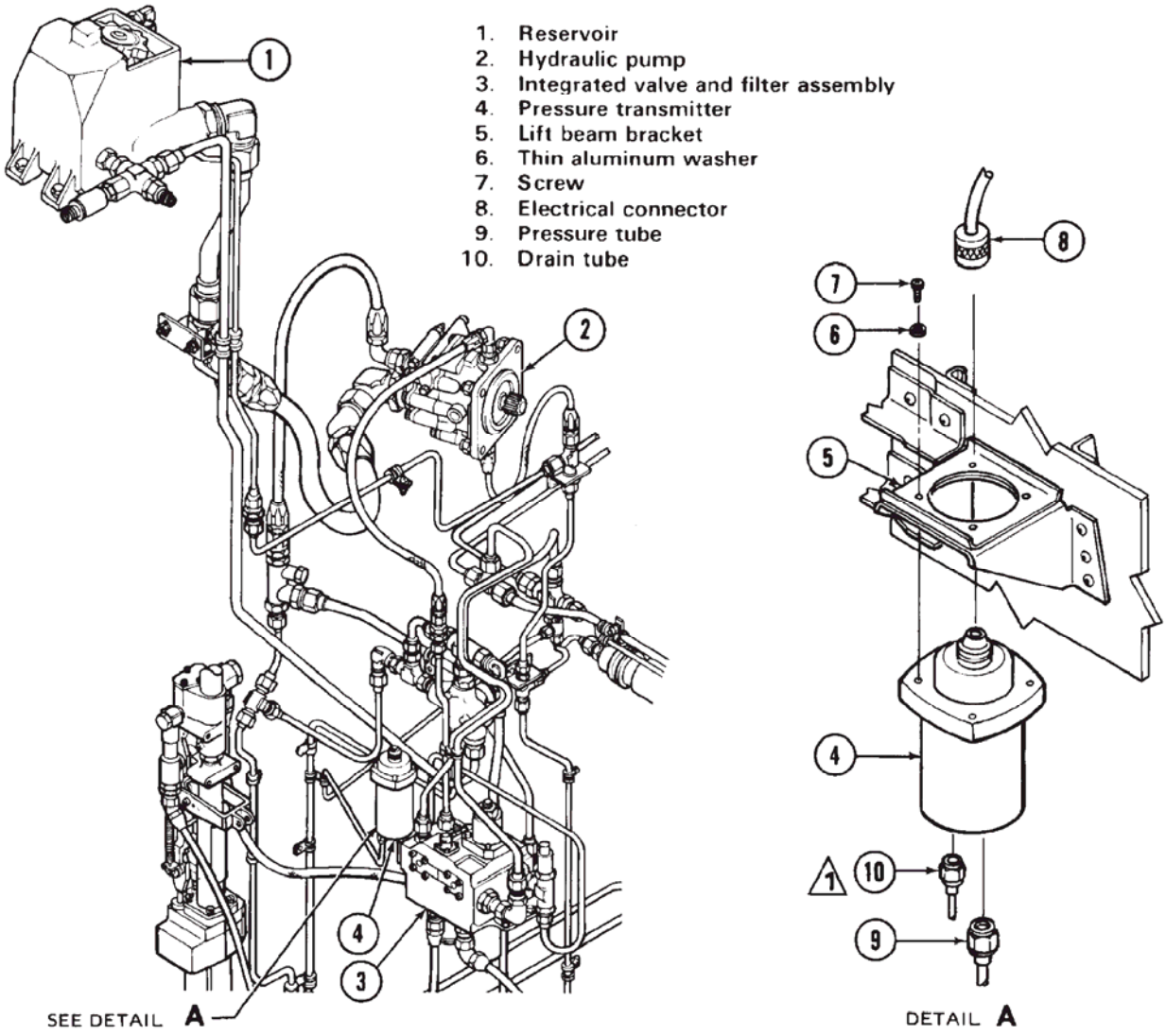

Figure 29-6. Pressure Transmitter

• COPYRIGHT © 2007 BY DART AEROSPACE LTD. •
THIS DOCUMENT IS PRIVATE AND CONFIDENTIAL AND IS SUPPLIED ON THE EXPRESS CONDITION THAT IT IS NOT TO BE USED FOR ANY PURPOSE OR COPIED OR COMMUNICATED TO ANY OTHER PERSON WITHOUT WRITTEN PERMISSION FROM DART AEROSPACE LTD.

29.3.8 Collective Hydraulic Cylinder

A dual hydraulic cylinder, located in left aft pylon area is used to assist collective control of main rotor and reduce feed back forces. The hydraulic cylinder lower valve assembly receives pressure from two, and system one supplies pressure to upper valve assembly.

NOTE

When overhaul of hydraulic servo cylinder assemblies is required, contact Product Support Engineering, for nearest approved service facility.

29.3.8.1 Removal

29.3.8.1.1 Remove access panel on left side of pylon island.

29.3.8.1.2 Disconnect hydraulic pressure and return hoses by removing banjo fittings. Cap or plug openings. Label hoses for reference at installation.

29.3.8.1.3 Detach lower end of spring (14, Figure 29-7) and disconnect control tube (16) from input lever (15). If cylinder is to be replaced, retain spring (14) for use in reinstallation.

29.3.8.1.4 Remove bolt to disconnect lower end of cylinder from support (20).

29.3.8.1.5 Remove four nuts and washers to detach bearing housing (9) from support (10).

NOTE

If transmission is installed, cylinder assembly will have to be removed by rotating bearing housing (9) so it will pass down through support (10). If transmission is not installed, cylinder assembly can be removed up through support (10).

29.3.8.1.6 Disconnect control tube (5) from collective lever (1) and remove cylinder assembly.

29.3.8.1.7 Remove boot (6) and detach clevis (8) from universal (7). Remove clevis with jamnut and lock.

29.3.8.2 Repair

MATERIALS REQUIRED

NUMBER	NOMENCLATURE
C-405	Lockwire

29.3.8.2.1 For replacement of seals in servo and bypass valves, refer to Flight Control Cylinder Overhaul Manual, H.R. Textron, Inc., Valencia, California 91355.

29.3.8.2.2 Replace rod end bearings as follows:

NOTE

Rod end bearing wear tolerance is 0.006 in. (0.152 mm) radial and 0.012 in (0.305 mm) axial. Replace bearing if limits are exceeded.

29.3.8.2.2.1 Remove cotter pin, nut, washer and bolt from rod end bearing (19, Figure 29-7).

29.3.8.2.2.2 Remove lockwire, loosen jamnut (18) sufficiently to allow rod end to turn. Count number of turns to remove rod end bearing (19).

29.3.8.2.2.3 Install new KBNE-6W or NHHE6-21W rod end bearing with same number of turns.

NOTE

Center line of input lever (15) to center line of rod end bearing (19) is 16.75 in. (425.45 mm).

29.3.8.2.2.4 With valve body pushed full up and lower piston pulled full down, adjust lower rod end bearing (19) to align in support (20).

29.3.8.2.2.5 Install bolt temporarily through support and rod end. Torque jamnut (18) on rod end 200 to 250 in-Lbs. (22.60 to 28.25 Nm) and secure with lockwire (C-405).

• COPYRIGHT © 2007 BY DART AEROSPACE LTD. •
THIS DOCUMENT IS PRIVATE AND CONFIDENTIAL AND IS SUPPLIED ON THE EXPRESS CONDITION THAT IT IS NOT TO BE USED FOR ANY PURPOSE OR COPIED OR COMMUNICATED TO ANY OTHER PERSON WITHOUT WRITTEN PERMISSION FROM DART AEROSPACE LTD.

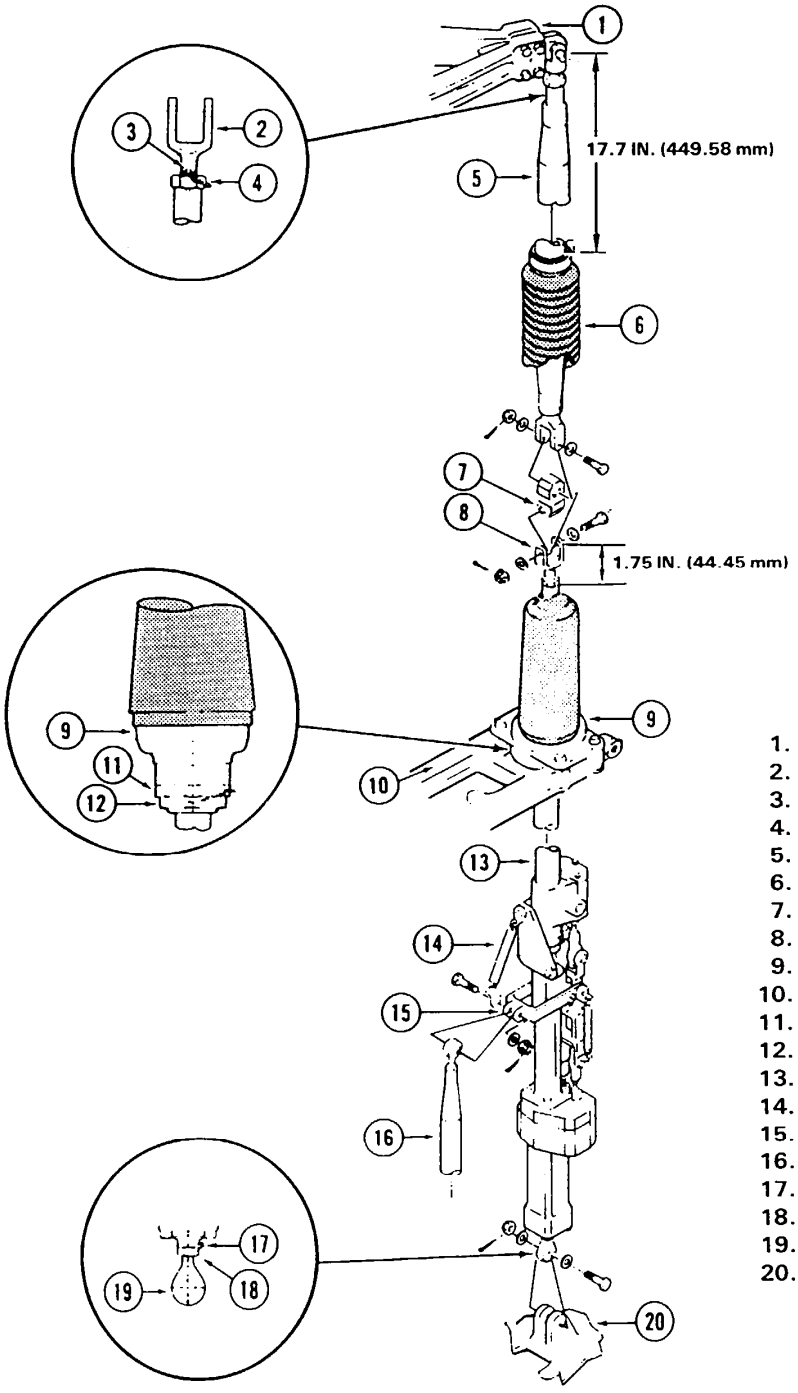

Figure 29-7. Collective Hydraulic Cylinder

• COPYRIGHT © 2007 BY DART AEROSPACE LTD. •
THIS DOCUMENT IS PRIVATE AND CONFIDENTIAL AND IS SUPPLIED ON THE EXPRESS CONDITION THAT IT IS NOT TO BE USED FOR ANY PURPOSE OR COPIED OR COMMUNICATED TO ANY OTHER PERSON WITHOUT WRITTEN PERMISSION FROM DART AEROSPACE LTD.

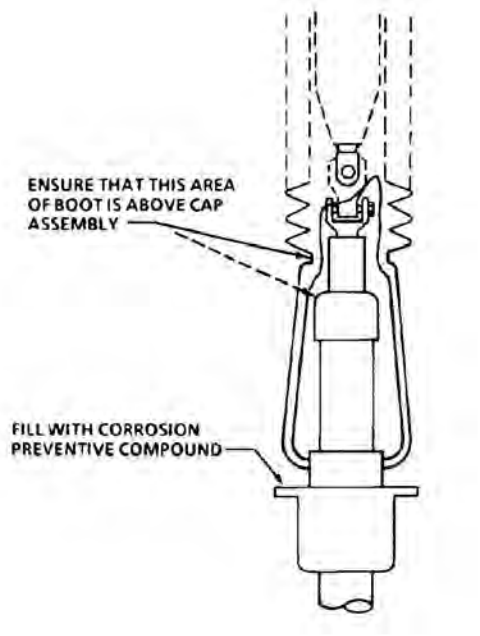

Figure 29-8. Hydraulic cylinder boot

29.3.8.2.2.6 Remove bolt attaching lower or end bearing (19) to support (20) and ensure no side loads have been induced into lower piston rod. If necessary, loosen and retighten bearing and jamnuts (11 and 12) to assure proper cylinder alignment in airframe.

29.3.8.3 Installation

MATERIALS REQUIRED

NUMBER	NOMENCLATURE
C-101	Corrosion Compound Preventive
C-104	Corrosion Compound Preventive
C-308	Sealant
C-405	Lockwire

29.3.8.3.1 Coat threads of clevis (8, Figure 29-7) with corrosion preventive compound (C- 101).

29.3.8.3.2 Assemble jam nut and lock on clevis and install in end of cylinder (13) to 1.75 in. (44.45 mm) between end of cylinder rod and center of hole in clevis. Torque jamnut 660 to 780 in-Lbs. (74.57 to 88.12 Nm).

29.3.8.3.3 Secure jam nut with lockwire (C-405). Apply sealant (C-308) around nut, lock, and threads on clevis.

29.3.8.3.4 Attach clevis (8) to universal (7) with bolt, using washers under bolt head and nut. Torque nut 100 to 140 in.lbs. (11.30 to 15.82 Nm). Install cotter pin.

• COPYRIGHT © 2007 BY DART AEROSPACE LTD. •
THIS DOCUMENT IS PRIVATE AND CONFIDENTIAL AND IS SUPPLIED ON THE EXPRESS CONDITION THAT IT IS NOT TO BE USED FOR ANY PURPOSE OR COPIED OR COMMUNICATED TO ANY OTHER PERSON WITHOUT WRITTEN PERMISSION FROM DART AEROSPACE LTD.

29.3.8.3.5 Place boot (6) over end of control tube (5). Fill cavity of housing (9) with corrosion preventive compound (C-104). Secure lower end of boot to housing (9, Figure 29-8).

29.3.8.3.6 Adjust bearing nut (11, Figure 29-7) and jamnut (12) to allow easy movement of cylinder in bearing housing (9) during installation.

29.3.8.3.7 Install cylinder assembly as follows:

NOTE

Cylinder can be installed from the top or bottom.

29.3.8.3.7.1 Insert cylinder (13) through support (10).

29.3.8.3.7.2 Align bearing housing (9) over studs of support, and install nuts and washers. Torque three smaller nuts 50 to 70 in-Lbs. (5.65 to 7.91 Nm), and largest nut 100 to 140 in-Lbs. (11.30 to 15.82 Nm).

29.3.8.3.7.3 Connect control tube (5) to collective lever (1) using bolt, washer, and nut. If bolt bottoms out, additional washers may be used. Torque 60 to 85 in-Lbs. (6.78 to 9.60 Nm). Install cotter pin.

29.3.8.3.7.4 With valve body pushed full up and lower piston pulled full down, adjust lower rod end bearing (19) to align in support (20). Install bolt temporarily through support and rod end 200 to 250 in-Lbs. (22.60 to 28.25 Nm). Secure with lockwire (C-405).

29.3.8.3.7.5 Tighten bearing nut (11) 900 to 1100 in-Lbs. (101.68 to 124.28 Nm).

29.3.8.3.7.6 Remove bolt attaching lower rod end bearing (19) to support (20). Ensure no side loads have been induced into lower piston rod. If necessary, loosen and retighten bearing nut (11) and jamnut (12) to assure proper cylinder alignment in airframe.

29.3.8.3.7.7 When alignment is satisfactory, torque jamnut (12) 900 to 1100 in-Lbs. (101.66 to 124.28 Nm) and secure with lockwire (C-405). Install washer and nut on bolt through support (20) and rod end bearing (19). Torque nut 95 to 110 in-Lbs. (10.73 to 12.43 Nm). Secure with cotter pin.

NOTE

If collective flight control cylinder (13) still cannot be installed without preload, it is permissible to add one AN960C416L washer (maximum) on two aft studs of support (10) between bearing housing (9) and support (10). Or, it is permissible to add one AN960C416L washer (maximum) and one AN960-516L washer (maximum) on each of the two forward studs between bearing housing (9) and support (10).

29.3.8.3.8 Observe labels on hydraulic hoses and connect to cylinder pressure and return ports, using new packings.

29.3.8.3.9 Connect control tube (16, Figure 29-6) and spring (14) during rigging procedures (Chapter 67).

29.3.8.3.10 Check and service hydraulic system reservoirs. Pressurize system and operate cylinder through full travel. Check for leaks and ensure there is no interference or binding in linkage or hydraulic hoses.

29.3.8.3.11 Check installation for security and install pylon panels.

• COPYRIGHT © 2007 BY DART AEROSPACE LTD. •
THIS DOCUMENT IS PRIVATE AND CONFIDENTIAL AND IS SUPPLIED ON THE EXPRESS CONDITION THAT IT IS NOT TO BE USED FOR ANY PURPOSE OR COPIED OR COMMUNICATED TO ANY OTHER PERSON WITHOUT WRITTEN PERMISSION FROM DART AEROSPACE LTD.

29.3.9 Cyclic Hydraulic Cylinder

Two dual hydraulic cylinders are mounted vertically in forward end of pylon support and are incorporated in the cyclic controls linkage to reduce effort required for control and to reduce feedback of forces from main rotor. Movement of either cyclic stick is transmitted through linkage to input levers on cylinders, opening control valves to allow hydraulic pressure to enter cylinders to assist in moving swashplate.

29.3.9.1 Removal

NOTE
Removal procedure for right and left cyclic cylinders is similar.

29.3.9.1.1 Open forward transmission cowling. Remove panel on front and side of pylon island.

29.3.9.1.2 Disconnect hydraulic hoses from cylinder at check valves and remove banjo fittings. Cap or plug open lines and ports.

NOTE
Label hydraulic hoses for reference at installation.

29.3.9.1.3 Remove nut, washer and bolt to disconnect control tube (12, Figure 29-9) from input lever (11).

29.3.9.1.4 Remove nut, washer, and bolt to disconnect lower end of cylinder (10) from support (13).

29.3.9.1.5 Remove four nuts and washers to detach bearing support (6) from cylinder support (7).

29.3.9.1.6 Remove nut, washer and bolt to disconnect control tube (3) from swashplate and remove cylinder.

NOTE
If transmission is installed, rotate cylinder assembly bearing support (6) so as to pass down through cylinder support (7). If transmission is not installed, cylinder assembly can be removed up through cylinder support (7).

29.3.9.1.7 Remove clamp and boot (4). Remove nut, washers, and bolt to separate cylinder (10) from universal (5).

29.3.9.1.8 Loosen jamnut and remove clevis from cylinder.

29.3.9.2 Installation

MATERIALS REQUIRED

NUMBER	NOMENCLATURE
C-101	Corrosion Compound Preventive
C-308	Sealant
C-405	Lockwire

29.3.9.2.1 Coat threads of clevis with corrosion preventive compound (C-101).

29.3.9.2.2 Install clevis with jamnut and rod end lock in end of hydraulic cylinder (10, Figure 29-9) to dimension of 1.75 in. (44.45 mm) for left cylinder and 1.90 in. (48.26 mm) for right cylinder between end of cylinder rod and center of holes in clevis.

29.3.9.2.3 Torque jamnut 660 to 780 in-Lbs. (67.79 to 88.12 Nm) and Secure with lockwire (C-405).

29.3.9.2.4 Cover nut, lock, and threads on clevis with sealant (C-308).

29.3.9.2.5 Attach cylinder (10) to universal (5) with bolt, washers, and nut. Use one washer under head and nut. Install cotter pin.

29.3.9.2.6 Slip boot (4) over end of control tube (3) and secure lower end of boot above cylinder bearing support. Establish 22.2 in. (563.88 mm) dimension as shown in Figure 29-9 with cylinder fully retracted and install clamp.

29.3.9.2.7 Adjust bearing nuts (8 and 9) to allow easy movement of cylinder in bearing housing during installation.

• COPYRIGHT © 2007 BY DART AEROSPACE LTD. •
THIS DOCUMENT IS PRIVATE AND CONFIDENTIAL AND IS SUPPLIED ON THE EXPRESS CONDITION THAT IT IS NOT TO BE USED FOR ANY PURPOSE OR COPIED OR COMMUNICATED TO ANY OTHER PERSON WITHOUT WRITTEN PERMISSION FROM DART AEROSPACE LTD.

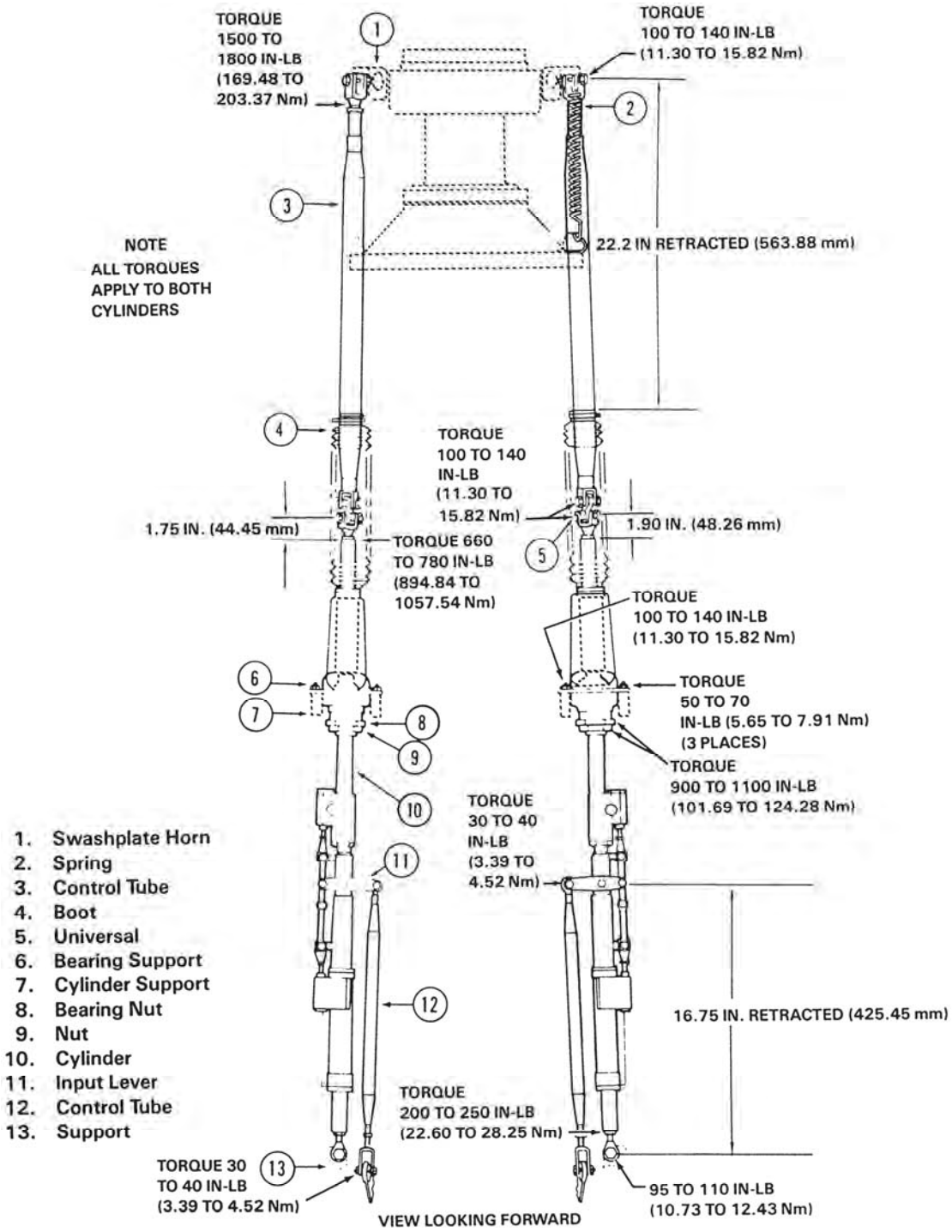

Figure 29-9. Cyclic Hydraulic Cylinder

• COPYRIGHT © 2007 BY DART AEROSPACE LTD. •
THIS DOCUMENT IS PRIVATE AND CONFIDENTIAL AND IS SUPPLIED ON THE EXPRESS CONDITION THAT IT IS NOT TO BE USED FOR ANY PURPOSE OR COPIED OR COMMUNICATED TO ANY OTHER PERSON WITHOUT WRITTEN PERMISSION FROM DART AEROSPACE LTD.

29.3.9.2.8 Install cylinder assembly as follows:

NOTE
Cylinder assembly can be installed from the top if transmission is removed. If transmission is installed, install cylinder assembly from the bottom.

29.3.9.2.8.1 Insert cylinder (10) through support (7).

NOTE
When transmission is installed insert lower end of cylinder assembly down through cargo compartment until top surface clears access hole in forward island, raise cylinder assembly through cylinder support (7) until bearing support (6) is past attachment studs.

29.3.9.2.8.2 Align bearing support (6) over studs of support, and install nuts and washers. Torque three smaller nuts 50 to 70 in-Lbs. (5.65 to 7.91 Nm) and largest nut 100 to 140 in-Lbs. (11.30 to 15.82 Nm).

29.3.9.2.8.3 With valve body pushed full up and lower piston pulled full down, adjust lower rod end to align in support (13). Install bolt temporarily through support and rod end. Torque jamnut on rod end 200 to 250 in-Lbs. (22.60 to 28.25 Nm) and lockwire.

29.3.9.2.8.4 Tighten bearing nut (8) 900 to 1100 in-Lbs. (101.68 to 124.28 Nm).

29.3.9.2.8.5 Remove bolt attaching lower rod end to support (13) and ensure no side loads have been induced into lower piston rod. If necessary, loosen and retighten bearing nut (8) to assure proper cylinder alignment in airframe.

29.3.9.2.8.6 When alignment is satisfactory, torque bearing nut (9) 900 to 1100 in-Lbs. (101.68 to 124.28 Nm) and secure with lockwire (C-405). Install washer and nut on bolt through support (13) and rod end. Torque nut 95 to 110 in-Lbs. (10.73 to 12.43 Nm). Secure with cotter pin.

29.3.9.2.9 Observe labels on hydraulic hoses and connect to cylinder pressure and return ports, using new packings.

29.3.9.2.10 Connect control tubes (3) and spring (2) to swashplate horns, and tubes (12) to input levers (11) during rigging procedure.

29.3.9.2.11 Check and service hydraulic system reservoirs (Chapter 12). Pressurize system and operate cylinder through full travel. Check for leaks and ensure there is no interference or binding in linkage or hydraulic hoses.

29.3.9.2.12 Install pylon panels and close transmission cowling.

29.3.9.3 Universal bearing replacement (205-076-381 and 412-076-620).

NOTE
Refer to BHT-ALL-SPM manual for bearing replacement.

29.3.10 Tail Rotor Hydraulic Cylinder

The hydraulic boost cylinder (4, Figure 29-10) in the anti-torque control linkage is mounted in the fuselage under engine deck immediately forward of the tailboom. The cylinder reduces effort required for control and reduces feedback forces from tail rotor. The boost cylinder receives pressure from system 1 only.

29.3.10.1 Removal

29.3.10.1.1 Open door on aft right side of fuselage.

29.3.10.1.2 Disconnect hydraulic pressure and return hoses (5, Figure 29-10) from hydraulic cylinder (4). Cap or plug open hoses and fittings.

NOTE
Label hoses for reference at installation.

29.3.10.1.3 Disconnect control tube (1) from clevis (2) at upper end of cylinder.

29.3.10.1.4 Remove nut, washers, spacer (6), and bolt from bellcrank (7 or 8) at lower end of support (9).

• COPYRIGHT © 2007 BY DART AEROSPACE LTD. •
THIS DOCUMENT IS PRIVATE AND CONFIDENTIAL AND IS SUPPLIED ON THE EXPRESS CONDITION THAT IT IS NOT TO BE USED FOR ANY PURPOSE OR COPIED OR COMMUNICATED TO ANY OTHER PERSON WITHOUT WRITTEN PERMISSION FROM DART AEROSPACE LTD.

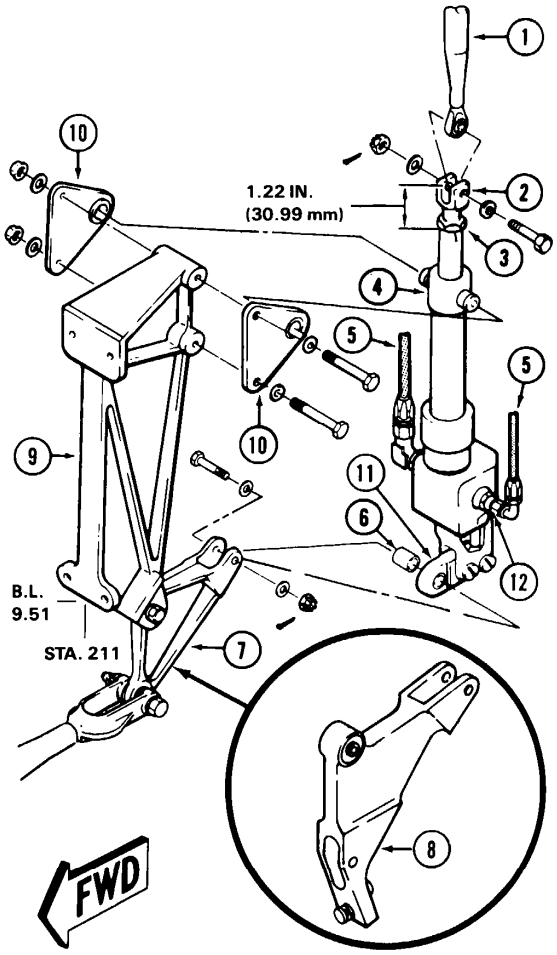

1. Control tube
2. Clevis
3. Nut
4. Cylinder
5. Hoses
6. Spacer
7. Bellcrank (P/N 212-001-711-1)
8. Bellcrank (P/N 212-001-188)
9. Support
10. Trunnion plates
11. Cylinder lever
12. Check valve

Figure 29-10. Tail Rotor Hydraulic Cylinder

• COPYRIGHT © 2007 BY DART AEROSPACE LTD. •
THIS DOCUMENT IS PRIVATE AND CONFIDENTIAL AND IS SUPPLIED ON THE EXPRESS CONDITION THAT IT IS NOT TO BE USED FOR ANY PURPOSE OR COPIED OR COMMUNICATED TO ANY OTHER PERSON WITHOUT WRITTEN PERMISSION FROM DART AEROSPACE LTD.

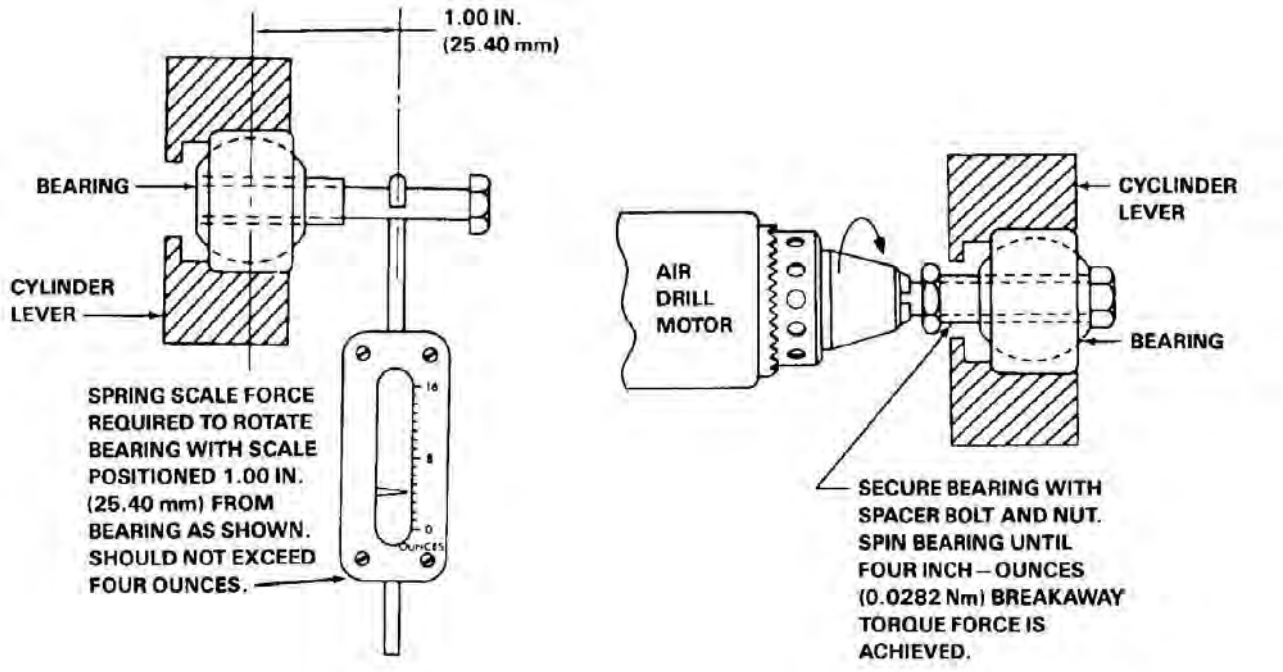

Figure 29-11. Tail Rotor Hydraulic Cylinder Lever Bearing

• COPYRIGHT © 2007 BY DART AEROSPACE LTD. •
THIS DOCUMENT IS PRIVATE AND CONFIDENTIAL AND IS SUPPLIED ON THE EXPRESS CONDITION THAT IT IS NOT TO BE USED FOR ANY PURPOSE OR COPIED OR COMMUNICATED TO ANY OTHER PERSON WITHOUT WRITTEN PERMISSION FROM DART AEROSPACE LTD.

29.3.10.1.5 Support cylinder and remove two bolts through trunnion plates (10). Remove plates and cylinder.

29.3.10.1.6 If cylinder is being replaced, remove clevis and hydraulic fittings for use on new cylinder.

29.3.10.2 Inspection and repair

MATERIALS REQUIRED

NUMBER	NOMENCLATURE
C-407	Abrasive Pad

29.3.10.2.1 Grasp cylinder (4, Figure 29-10) just below trunnion plates (10) and move the cylinder laterally. Lateral movement of cylinder should be from 0.003 to 0.050 in. (0.076 to 1.27 mm). There should not be any evidence of binding.

29.3.10.2.2 Should tightness or binding be found during inspection, remove cylinder (4) and clean inside diameter of trunnion plate (10) bushings using fine grade abrasive pad (C-407).

29.3.10.2.3 Inspect bearing in cylinder lever (11) for tightness. Breakaway torque required to rotate bearing shall not exceed 4.0 in-oz. (0.0282 Nm). This inspection may be accomplished as follows:

29.3.10.2.3.1 Disconnect bellcrank (7 or 8) from cylinder lever (11).

29.3.10.2.3.2 Place attachment bolt previously removed in cylinder lever bearing.

29.3.10.2.3.3 Attach a spring scale to attachment bolt and check force required to rotate bearing (Figure 29-11).

29.3.10.2.3.4 Should torque required to rotate cylinder lever (11, Figure 29-9) bearing exceed limit, use an air drill motor and attaching hardware previously removed to spin bearing until 4.0 in-oz. (0.0282 Nm) or less with no radial play is achieved (Figure 29-11).

29.3.10.2.3.5 If bearing does not meet torque requirement, replace in accordance with HR Textron Component Manual.

29.3.10.3 Installation

29.3.10.3.1 Position hydraulic cylinder (4, Figure 29-10) and two trunnion plates (10) on support (9).

29.3.10.3.2 Install two bolts through trunnion plates from left side, using aluminum washers under bolt heads and nuts.

29.3.10.3.3 Align cylinder lever to bellcrank (7 or 8). Install spacer (6) between bearing of cylinder lever (9) and right (inboard) tang of bellcrank (7 or 8). Install bolt head inboard with aluminum washer under bolt head and nut. Install cotter pin.

29.3.10.3.4 Assemble clevis (2) and nut (3) to upper end of cylinder. Dimension from center of clevis holes to end of cylinder is 1.22 in. (30.99 mm). Tighten clevis jamnut.

NOTE

Check security of check valve (12) before hoses (5) are connected.

29.3.10.3.5 Attach control tube (1) to clevis with bolt, two steel washers and nut. Install bolt with head inboard. If raised pad on outside of clevis (2) prevents washer under bolt head or nut from seating properly, refer to Technical Bulletin 212-79-21. Secure with cotter pin. Observe labels and connect hydraulic pressure and return fittings and hoses (5).

29.3.10.3.6 If bellcrank (7 or 8) was removed, install with bolt heads inboard. Use washers under head and nuts. Install cotter pins.

• COPYRIGHT © 2007 BY DART AEROSPACE LTD. •
THIS DOCUMENT IS PRIVATE AND CONFIDENTIAL AND IS SUPPLIED ON THE EXPRESS CONDITION THAT IT IS NOT TO BE USED FOR ANY PURPOSE OR COPIED OR COMMUNICATED TO ANY OTHER PERSON WITHOUT WRITTEN PERMISSION FROM DART AEROSPACE LTD.

CHAPTER 29 – HYDRAULIC SYSTEM (29-00-00)

CAUTION

DO NOT ATTEMPT ANY ADJUSTMENT OF SERVO VALVE OR BYPASS VALVE 0F HYDRAULIC CYLINDER. IF MALFUNCTION OCCURS, REPLACE CYLINDER ASSEMBLY.

29.3.10.3.7 Check anti-torque controls for free movement through full range of travel and for interference or binding of hydraulic hoses. Apply hydraulic pressure and check for leaks.

29.3.10.3.8 Close access door.

29.4 ROTOR BRAKE HYDRAULIC SYSTEM

29.4.1 Rotor Brake System

Hydraulic pressure to operate the rotor brake system is provided by actuation of lever (5, Figure 29-11) on master cylinder (4) located in the cabin roof.

29.4.2 Troubleshooting

The following list of probable causes, isolation procedures and remedies is intended to aid in rotor brake system troubleshooting.

• COPYRIGHT © 2007 BY DART AEROSPACE LTD. •
THIS DOCUMENT IS PRIVATE AND CONFIDENTIAL AND IS SUPPLIED ON THE EXPRESS CONDITION THAT IT IS NOT TO BE USED FOR ANY PURPOSE OR COPIED OR COMMUNICATED TO ANY OTHER PERSON WITHOUT WRITTEN PERMISSION FROM DART AEROSPACE LTD.

Table 29-3. Troubleshooting rotor brake system

Indication of Trouble	Probable Cause	Corrective Action
No braking action.	Insufficient fluid in system.	Fill and bleed system.
	Foreign substance in fluid.	Purge system.
	Primary valve open.	Replace master cylinder.
	Relief valve open.	Replace master cylinder.
	Excessive brake lining wear.	Replace lining.
Spongy action of control.	Air in system.	Fill and bleed system.
Loss of braking action.	Worn seal in master cylinder.	Replace master cylinder.
	Worn seal in brake assembly.	Replace brake assembly.
	Excessive brake lining wear.	Replace lining.
Leaks at master cylinder.	Worn or damage seal in cylinder.	Replace master cylinder seals.
Leaks at brake assembly.	Worn or damage seals in brake assembly.	Replace brake assembly seals.
ROTOR BRAKE caution segment inoperative.	Burned out bulbs.	Replace bulbs.
	Loose electrical connection.	Tighten connections.
	Broken or disconnected wire.	Replace or connect wire (Chapter 96).
	Improper micro-switch adjustment.	Adjust micro-switches.
ROTOR BRAKE segment illuminates when brake not applied.	Faulty micro-switch.	Replace switch.
	Lining binding.	Clean brake cylinder.

• COPYRIGHT © 2007 BY DART AEROSPACE LTD. •
THIS DOCUMENT IS PRIVATE AND CONFIDENTIAL AND IS SUPPLIED ON THE EXPRESS CONDITION THAT IT IS NOT TO BE USED FOR ANY PURPOSE OR COPIED OR COMMUNICATED TO ANY OTHER PERSON WITHOUT WRITTEN PERMISSION FROM DART AEROSPACE LTD.

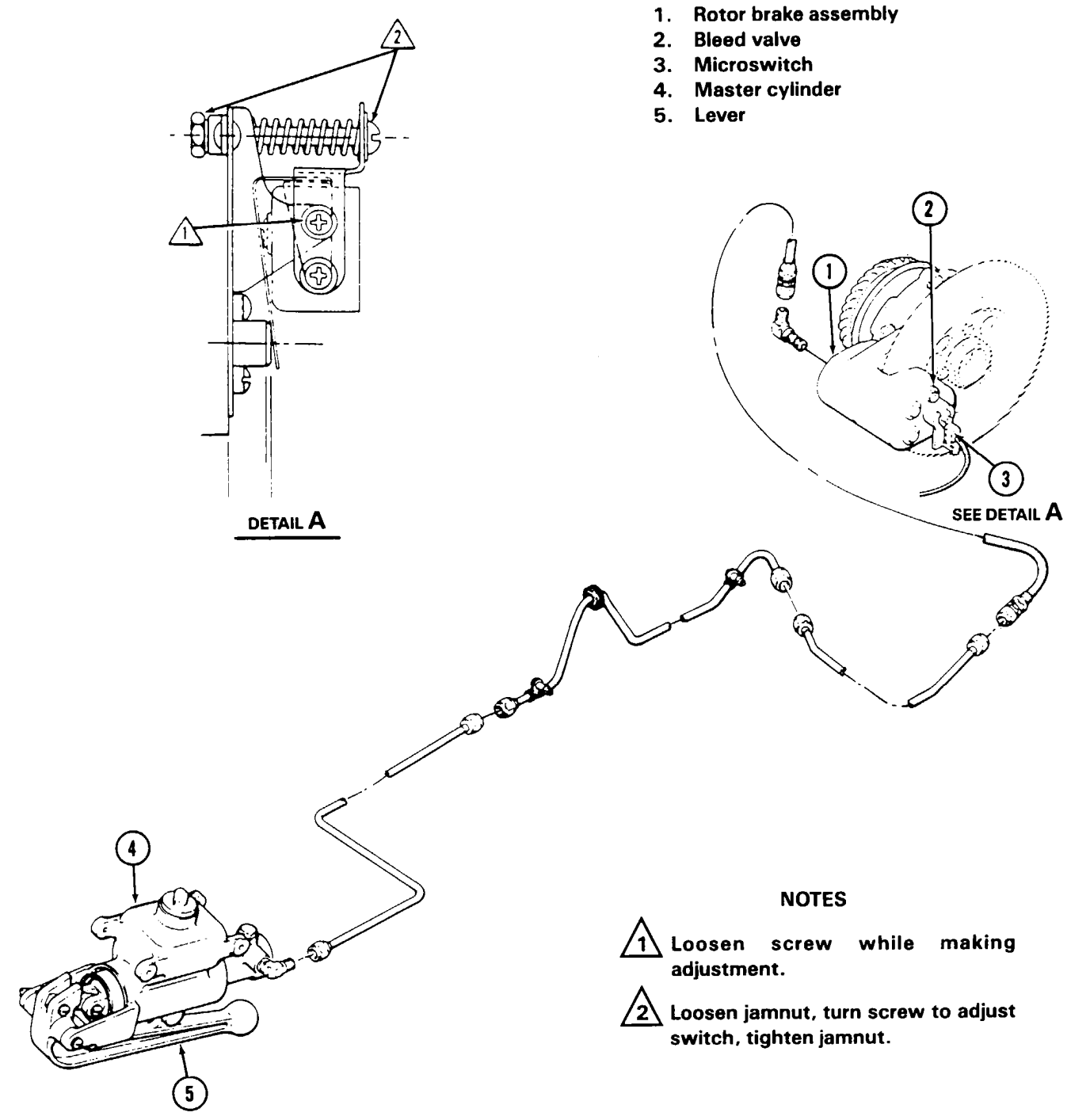

Figure 29-12. Rotor Brake System

• COPYRIGHT © 2007 BY DART AEROSPACE LTD. •
THIS DOCUMENT IS PRIVATE AND CONFIDENTIAL AND IS SUPPLIED ON THE EXPRESS CONDITION THAT IT IS NOT TO BE USED FOR ANY PURPOSE OR COPIED OR COMMUNICATED TO ANY OTHER PERSON WITHOUT WRITTEN PERMISSION FROM DART AEROSPACE LTD.

29.4.3 Servicing

MATERIALS REQUIRED

NUMBER	NOMENCLATURE
C-002 or C-072	Hydraulic Fluid

29.4.3.1 Apply rotor brake and leave handle in PARK position.

29.4.3.2 Remove reservoir filler cap of master cylinder, located on top, right forward area of cabin roof.

29.4.3.3 Correct fluid level of reservoir is 0.50 in. (12.7mm) below bottom of filler neck; if fluid level is low, replenish with hydraulic fluid (C-002) or hydraulic fluid (C-072).

29.4.3.4 Install filler cap.

29.4.3.5 Release rotor brake by returning handle of master cylinder to up (off) position.

29.4.4 Bleeding

29.4.4.1 Check master cylinder (4, Figure 29-12) for proper fluid level, (paragraph 29.4.3).

NOTE
Ensure rubber hose used in following step is clean.

29.4.4.2 Open one bleed valve (2) and slip one end of a length of rubber hose on valve extension. Route other end of hose to a suitable container in order to capture brake fluid discharged during bleeding operation.

29.4.4.3 Slowly pull master cylinder lever (5) down and hold. Do not allow lever to pass center into park position.

29.4.4.4 Close bleed valve (2) and replenish oil in master cylinder. Return master cylinder lever (5) to up (off) position.

29.4.4.5 Repeat steps 29.4.4.2 through 29.4.4.4 until fluid discharged is free of entrained air. No less than one-half pint (227.3 ml) of fluid should be drained from each valve before conducting bleeding operation.

29.4.4.6 Repeat steps 29.4.4.2 through 29.4.4.5 for other bleed valve (2).

29.4.4.7 Remove drain hose and catch receptacle. Install reservoir cover.

29.4.4.8 Close transmission cowl.

29.4.5 Master Cylinder

MATERIALS REQUIRED

NUMBER	NOMENCLATURE
C-304	Solvent

WARNING

CLEANING HYDRAULIC COMPONENTS SHALL BE ACCOMPLISHED WITH SOLVENT (C-304) ONLY. DO NOT USE ALCOHOL.

29.4.5.1 Removal

29.4.5.1.1 Remove sealing compound from around top master cylinder reservoir (4, Figure 29-12).

29.4.5.1.2 Loosen tubing from end of master cylinder and allow fluid to drain into receptacle.

29.4.5.1.3 Disconnect tubing from master cylinder. Plug opening to prevent entry of foreign materials.

29.4.5.1.4 Remove bolts, nuts, and, washers attaching master cylinder to roof structure. Remove master cylinder.

29.4.5.2 Inspection and repair

Refer to BHT-212-CR&O.

• COPYRIGHT © 2007 BY DART AEROSPACE LTD. •
THIS DOCUMENT IS PRIVATE AND CONFIDENTIAL AND IS SUPPLIED ON THE EXPRESS CONDITION THAT IT IS NOT TO BE USED FOR ANY PURPOSE OR COPIED OR COMMUNICATED TO ANY OTHER PERSON WITHOUT WRITTEN PERMISSION FROM DART AEROSPACE LTD.

29.4.5.3 Installation

MATERIALS REQUIRED

NUMBER	NOMENCLATURE
C-308	Sealant

29.4.5.3.1 Place master cylinder (4, Figure 29-12) in install position, right of overhead console in cabin roof and attach to structure with four bolts, four nuts, and eight washers.

29.4.5.3.2 Apply bead of sealant (C-308) to roof surface around master cylinder fill port.

29.4.5.3.3 Attach tubing to master cylinder.

29.4.5.3.4 Bleed master cylinder (paragraph 29.4.4).

• COPYRIGHT © 2007 BY DART AEROSPACE LTD. •
THIS DOCUMENT IS PRIVATE AND CONFIDENTIAL AND IS SUPPLIED ON THE EXPRESS CONDITION THAT IT IS NOT TO BE USED FOR ANY PURPOSE OR COPIED OR COMMUNICATED TO ANY OTHER PERSON WITHOUT WRITTEN PERMISSION FROM DART AEROSPACE LTD.

CHAPTER 30
ICE AND RAIN PROTECTION
(30-00-00)

REFER TO
BHT-212-MM

• COPYRIGHT © 2007 BY DART AEROSPACE LTD. •
THIS DOCUMENT IS PRIVATE AND CONFIDENTIAL AND IS SUPPLIED ON THE EXPRESS CONDITION THAT IT IS NOT TO BE USED FOR ANY PURPOSE OR COPIED OR COMMUNICATED TO ANY OTHER PERSON WITHOUT WRITTEN PERMISSION FROM DART AEROSPACE LTD.

CHAPTER 32
LANDING GEAR
(32-00-00)

REFER TO
BHT-212-MM

• COPYRIGHT © 2007 BY DART AEROSPACE LTD. •
THIS DOCUMENT IS PRIVATE AND CONFIDENTIAL AND IS SUPPLIED ON THE EXPRESS CONDITION THAT IT IS NOT TO BE USED FOR ANY PURPOSE OR COPIED OR COMMUNICATED TO ANY OTHER PERSON WITHOUT WRITTEN PERMISSION FROM DART AEROSPACE LTD.

CHAPTER 52
DOORS AND WINDOWS
(52-00-00)

• COPYRIGHT © 2007 BY DART AEROSPACE LTD. •
THIS DOCUMENT IS PRIVATE AND CONFIDENTIAL AND IS SUPPLIED ON THE EXPRESS CONDITION THAT IT IS NOT TO BE USED FOR ANY PURPOSE OR COPIED OR COMMUNICATED TO ANY OTHER PERSON WITHOUT WRITTEN PERMISSION FROM DART AEROSPACE LTD.

TABLE OF CONTENTS

Table of Contents 2
List of Figures 3
Consumable Materials List 4
52.1 Doors 6
52.1.1 General Maintenance Practices 6
52.1.2 Seal Replacement – Access Doors, Panels, Cowlings, Fairings and Covers 6
52.2 Crew Doors. 15
52.2.1 Crew Doors – Description and Maintenance 15
52.2.2 Crew Door Jettison Mechanism 19
52.2.3 Crew Door Hinges 21
52.3 Passenger/Cargo Area Access Doors 28
52.3.1 Passenger/Cargo Door 28
52.3.2 Passenger/Cargo Door Latches 29
52.3.3 Annual Functional Inspection for Crew and Passenger/Cargo Doors 30
52.3.4 Cargo Hinged Panels 31
52.4 Cargo Compartment Door 37
52.4.1 Removal 37
52.4.2 Inspection 37
52.4.3 Repair 37
52.5 Access Covers and Doors 37
52.5.1 Nose Access Doors 37
52.5.2 Electrical and Equipment Compartment Access Doors 38
52.5.3 Miscellaneous Access Doors 38
52.6 Tail Rotor Driveshaft Access Covers 39
52.6.1 Removal 39
52.6.2 Inspection 39
52.6.3 Repair 39
52.6.4 Installation 39
52.7 Windows and Windshields 41
52.7.1 Windshields 41
52.7.2 Cabin Roof Windows 45
52.7.3 Lower Nose Section Windows 48
52.7.4 Crew Door Windows 48
52.7.5 Passenger/Cargo Door Windows (Doors Equipped with Push out Windows) 50
52.7.6 Cargo Hinged Panel Door Windows 54

• COPYRIGHT © 2007 BY DART AEROSPACE LTD. •
THIS DOCUMENT IS PRIVATE AND CONFIDENTIAL AND IS SUPPLIED ON THE EXPRESS CONDITION THAT IT IS NOT TO BE USED FOR ANY PURPOSE OR COPIED OR COMMUNICATED TO ANY OTHER PERSON WITHOUT WRITTEN PERMISSION FROM DART AEROSPACE LTD.

LIST OF FIGURES

Figure 52.1. Fuselage Access Doors, Covers, and Panels (Sheet 1 of 4) 8
Figure 52-1. Fuselage Access Doors, Covers, and Panels (Sheet 2 of 4) 9
Figure 52-1. Fuselage Access Doors, Covers, and Panels (Sheet 3 of 4) 10
Figure 52-1. Fuselage Access Doors, Covers, and Panels (Sheet 4 of 4) 11
Figure 52-2. Lower Fuselage and Tailboom Access Doors, Covers, and Panels (Sheet 1 of 3) 12
Figure 52-2. Lower Fuselage and Tailboom Access Doors, Covers, and Panels (Sheet 2 of 3) 13
Figure 52-2. Lower Fuselage and Tailboom Access Doors, Covers, and Panels (Sheet 3 of 3) 14
Figure 52-3. Interior Cabin Access Doors, Covers, and Panels (Sheet 1 of 2) 16
Figure 52-3. Interior Cabin Access Doors, Covers, and Panels (Sheet 2 of 2) 17
Figure 52-4. Crew Door (Sheet 1 of 2) 23
Figure 52-4. Crew Door (Sheet 2 of 2) 24
Figure 52-5. Crew Door Jettison Mechanism 25
Figure 52-6. Crew Door Hinges (Sheet 1 of 2) 26
Figure 52-6. Crew Door Hinges (Sheet 1 of 2) 27
Figure 52-7. Passenger/Cargo Door (Sheet 1 of 2) 33
Figure 52-7. Passenger/Cargo Door (Sheet 2 of 2) 34
Figure 52-8. Passenger/Cargo Door Latch (Typical) 35
Figure 52-9. Cargo Hinged Panel Door 36
Figure 52-10. Tailboom Driveshaft Access Covers 40
Figure 52-11. Windows and Windshields 43
Figure 52-12. Windshield and Window Damage Limits 44
Figure 52-13. Passenger/Cargo Door Windows (Doors Equipped with Push-out Style Windows) 47

• COPYRIGHT © 2007 BY DART AEROSPACE LTD. •
THIS DOCUMENT IS PRIVATE AND CONFIDENTIAL AND IS SUPPLIED ON THE EXPRESS CONDITION THAT IT IS NOT TO BE USED FOR ANY PURPOSE OR COPIED OR COMMUNICATED TO ANY OTHER PERSON WITHOUT WRITTEN PERMISSION FROM DART AEROSPACE LTD.

CHAPTER 52 – DOORS AND WINDOWS (52-00-00)

CONSUMABLE MATERIALS LIST

The following consumable materials are required to perform the maintenance procedures within this chapter.

Item No.	Nomenclature	Cage/FSCM Source
C-004	Grease, Graphite, MIL-G-7178	Commercial
C-100	Chemical Film Material (Alodine 1200 or 1201) MIL-C-81706, Class 1A, Form II (Dip Tank) or III (Brush-on). Apply per MIL-C-5541.	Commercial
C-204	Epoxy Polyamide Primer, MIL-P-23377, MIL-P-85582, Type I. Refer to text for color.	22873
C-208	Epoxy/Zinc Coating, Code 2320-CL-5	06613
C-300	Adhesive, 299-947-152, Type I, Class I (Dapcotac 3300)	97499
C-305	Aliphatic Naphtha, TT-N-95, Type II	Commercial
C-306	Toluene, TT-T-548	Commercial
C-307	Adhesive, Silicone, 299-947-152, Type I, Class 2 or RTV 732, Clear or RTV 108, Translucent	97499 01139 01139
C-308	Adhesive, Sealant, 299-947-107, Type III, Class 7, MIL-S-8802, Class B2 or Proseal 890	97499 83527 83574
C-309	Methyl-Ethyl-Ketone (MEK), TT-M-261 B, pH Insignificant (Alternate where MEK use prohibited: RHO SOLV 756)	Commercial 83527
C-311	Adhesive, 299-947-107, Type II, Class 4 or EC2126	97499 76381
C-318	Cleaning Compound, Alkaline Base, MIL-C-87936, pH Value 12 Max. (Detergent)	Commercial
C-330	Acrylic Plastic Cleaner, Tend Antistatic or Cadco Antistatic Plastic Cleaner or Glisten Acrylic Plastic Cleaner	1N960 95696 20913
C-337	Primer, (Dow Corning No. 1200)	71984
C-344	Alcoholic Phosphoric Cleaner (Turco W.O. 1) pH 7	61102
C-347	Xylene TT-X-916, Grade A	Commercial

• COPYRIGHT © 2007 BY DART AEROSPACE LTD. •
THIS DOCUMENT IS PRIVATE AND CONFIDENTIAL AND IS SUPPLIED ON THE EXPRESS CONDITION THAT IT IS NOT TO BE USED FOR ANY PURPOSE OR COPIED OR COMMUNICATED TO ANY OTHER PERSON WITHOUT WRITTEN PERMISSION FROM DART AEROSPACE LTD.

CHAPTER 52 – DOORS AND WINDOWS (52-00-00)

Item No.	Nomenclature	Cage/FSCM Source
C-405	Lockwire, MS20995C32 (0.032 Inch Dia.)	Commercial
C-406	Aluminum Oxide Cloth. P-C-451	Commercial
C-407	Abrasive Pad, Nylon Web (Scotchbrite) L-P-0050, Type I, Class 1, Size 1	27713 or 76381
C-414	Shear Wire, MS20995CY20 (0.020 inch)(Copper)	Commercial
C-423	Abrasive Cloth (P-C-458) or Paper (P-P-1O1) (All Grits)	Commercial

• COPYRIGHT © 2007 BY DART AEROSPACE LTD. •
THIS DOCUMENT IS PRIVATE AND CONFIDENTIAL AND IS SUPPLIED ON THE EXPRESS CONDITION THAT IT IS NOT TO BE USED FOR ANY PURPOSE OR COPIED OR COMMUNICATED TO ANY OTHER PERSON WITHOUT WRITTEN PERMISSION FROM DART AEROSPACE LTD.

52.1 DOORS

This chapter provides maintenance data for crew doors, passenger/cargo doors, access doors and panels, tail rotor driveshaft covers, and windshields and windows.

52.1.1 General Maintenance Practices

52.1.2 Seal Replacement – Access Doors, Panels, Cowlings, Fairings and Covers

MATERIALS REQUIRED

NUMBER	NOMENCLATURE
C-300	Adhesive
C-309	Methyl-Ethyl-Ketone (MEK)
C-311	Adhesive
C-423	Abrasive Cloth or Paper

NOTE

Seals may be either rubber or silicone composition. Bonding procedure is different for each type. Seals subjected to fuel or oil contamination (used in the pylon transmission and engine compartment) should be of polysulfide or neoprene (rubber type).

52.1.2.1 Determine type of seal being replaced by cutting a small specimen from damaged seal and subjecting it to flame. Silicone seals are more rapidly affected by flame and will leave a gray ash residue. Rubber type seals are much more fire resistant and will leave a black ash residue.

52.1.2.2 Remove all paint and primer from metal surface where seal is to be applied.

52.1.2.3 Clean new seal and the metal where seal is to be applied with MEK (C-309) or equivalent and dry with clean, lint-free cloths.

NOTE

It is necessary to thoroughly clean surfaces before sanding to preclude working any foreign matter into pores of material.

52.1.2.4 Sand mating surfaces of seal and metal with 180 grit abrasive cloth or paper (C-423).

52.1.2.5 Clean sanded surfaces with MEK (C-309) and dry with a clean, lint-free cloth.

52.1.2.6 Bond rubber type (black ash) seals as follows:

52.1.2.6.1 Apply an even coat of adhesive (0-311) to mating surfaces of seal and metal.

52.1.2.6.2 Allow adhesive to air dry 10 to 15 minutes at 75°F (24°C) or above. Adhesive should be aggressively tacky and adhere (but not transfer to) finger when touched.

52.1.2.6.3 Repeat preceding steps 53.1.2.6.1 and 52.1.2.6.2 Second coat is mandatory to obtain good adhesion.

52.1.2.6.4 Start at one end and roll on seal. Press seal down to expel all air to ensure proper contact and adhesion.

52.1.2.6.5 Air cure for a minimum of 4 hours at 75°F (24°C) or above.

52.1.2.7 Bond silicone composition (gray ash) seals as follows:

CAUTION

DO NOT CAP ADHESIVE AFTER MIXTURE. MIXTURE RELEASES HYDROGEN GAS WHICH CAN CAUSE HIGH PRESSURES. POT LIFE OF THIS ADHESIVE IS 6 HOURS.

• COPYRIGHT © 2007 BY DART AEROSPACE LTD. •
THIS DOCUMENT IS PRIVATE AND CONFIDENTIAL AND IS SUPPLIED ON THE EXPRESS CONDITION THAT IT IS NOT TO BE USED FOR ANY PURPOSE OR COPIED OR COMMUNICATED TO ANY OTHER PERSON WITHOUT WRITTEN PERMISSION FROM DART AEROSPACE LTD.

52.1.2.7.1 Apply one even coat of adhesive (C-300) to bond surfaces of seal and metal.

52.1.2.7.2 Air dry at 75°F (24°C) or above, for at least an hour, but not to exceed 8 hours.

52.1.2.7.3 Start at one end and roll on seal. Press seal down to expel all air to ensure proper contact and adhesion.

52.1.2.7.4 Curing time for adhesive is 7 days at 75 °F (24°C). Curing may be accelerated by heating 110 to 115°F (43 to 45.8°C) for 18 hours.

• COPYRIGHT © 2007 BY DART AEROSPACE LTD. •
THIS DOCUMENT IS PRIVATE AND CONFIDENTIAL AND IS SUPPLIED ON THE EXPRESS CONDITION THAT IT IS NOT TO BE USED FOR ANY PURPOSE OR COPIED OR COMMUNICATED TO ANY OTHER PERSON WITHOUT WRITTEN PERMISSION FROM DART AEROSPACE LTD.

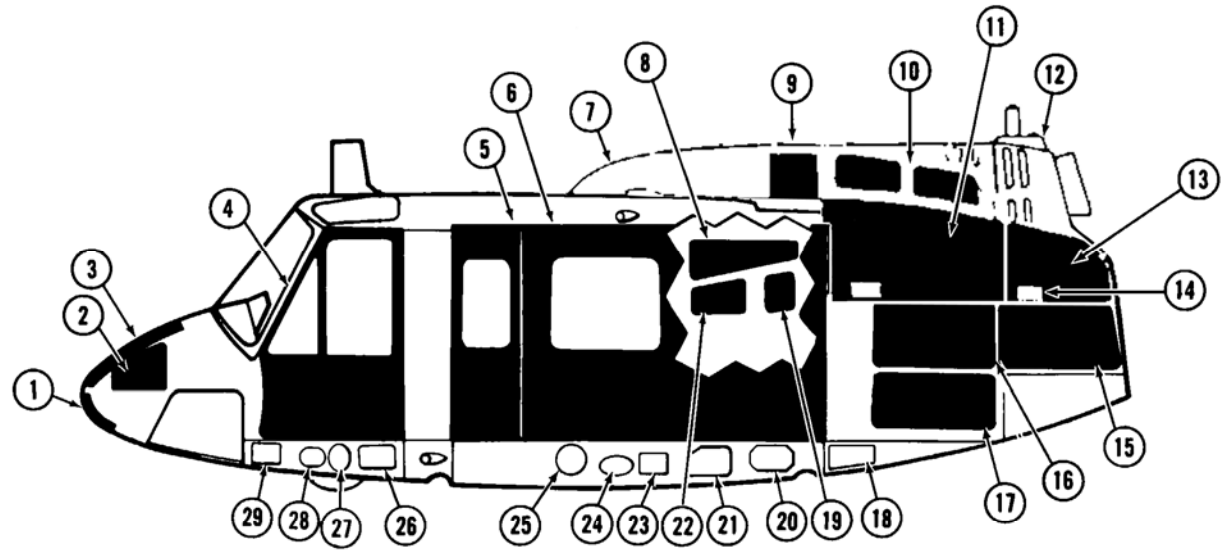

LEFT SIDE VIEW

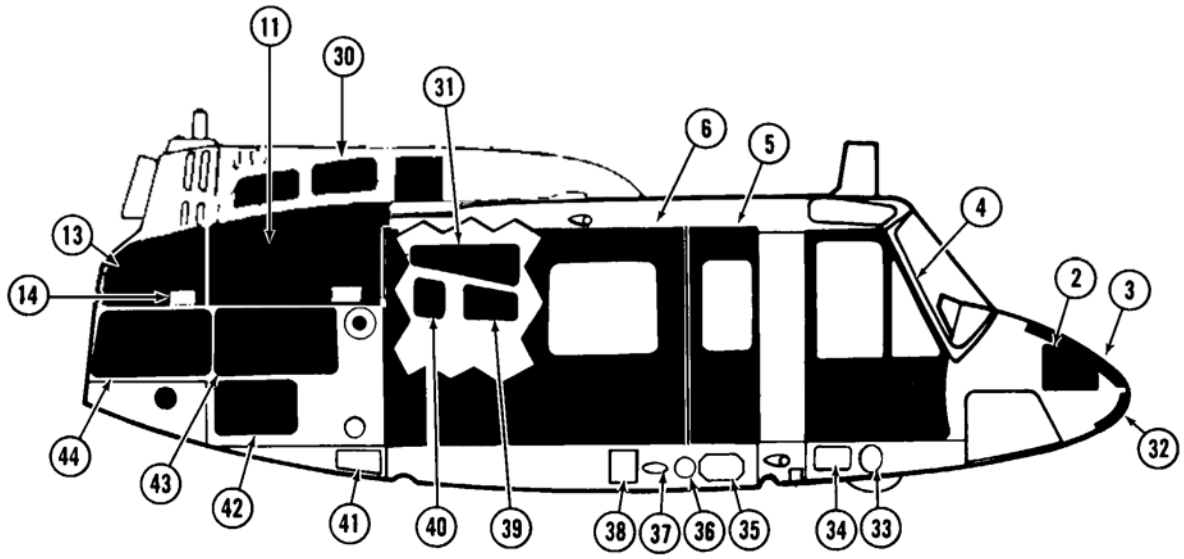

RIGHT SIDE VIEW

Figure 52.1. Fuselage Access Doors, Covers, and Panels (Sheet 1 of 4)

• COPYRIGHT © 2007 BY DART AEROSPACE LTD. •
THIS DOCUMENT IS PRIVATE AND CONFIDENTIAL AND IS SUPPLIED ON THE EXPRESS CONDITION THAT IT IS NOT TO BE USED FOR ANY PURPOSE OR COPIED OR COMMUNICATED TO ANY OTHER PERSON WITHOUT WRITTEN PERMISSION FROM DART AEROSPACE LTD.

ITEM	NOMENCLATURE	ACCESSES	DIMENSIONS (INCHES)	RETAINER TYPE QTY
1	Nose Door (Lower)	Inverters No. 1. 2, and DC Control Panels No. 1	24 x 34	Camlock 7 Hinge 2
2	Access Panel	RMI Adapter No. 1 and 2	13 x 18	Screw 12
3	Nose Door (Upper)	Battery, RPM Limit Warning, Engine/Pilot Instrument Lights, Power Supply, Glidescope Antenna Marker Beacon/ADF/DME/VOR Receivers, VHF Transceivers and VOR Coupler	24 x 34	Camlock 7 Hinge 2
4	Crew Door (Pilot/Copilot)	Instrument Panel and Pedestal	36 x 82	Latch 1 Hinge 2
5	Hinged Door (Left/Right)	Forward Passenger and Cargo Compartment	20 x 33	Latch 1 Hinge 2
6	Sliding Cargo Door (Left/Right)	Aft Passenger and Cargo Compartment	38 x 42	Roller 5 Latch/Lock 1 Track 1
7	Transmission Fairing P/N 205-060-805-049 OR 205-060-805-083	Upper Transmission, System No. 2 Hydraulic Pump, and Systems No.1 and No. 2 Hydraulic Reservoirs	14 x 54	Latch 3
8	Door Assembly P/N 205-031-221-001	Transmission Mounts, Fuel Shutoff valve, Driveshaft Quill and Coupling, Hydraulic Pump. Droop Compensator Controls, Oil and Hydraulic Manifolds, and Scupper Drain Tube	10 x 33	Screw 25
9	Engine Fairing P/N 205-060-865-001	Engine Air Inlet, Ice Detector	12 x 15	Camlock or Bolt 2 Hinge 1
10	Upper Engine Cowl P/N 205-060-807-083	Anti-ice Valve, Start Fuel Solenoid	20 x 44	Latch 2 Hinge 2
11	Lower Engine cowl P/N 205-060-826-133 (L/H) P/N 205-060-826-134 (R/H)	Oil Filters, Fuel Filters, FCU, Governor Linear Actuator	20 x 44	Latch 4 Hinge 1
12	Tailpipe Fairing P/N 205-060-877-057	Engine Exhaust Pipe		Camlock 12
13	Tailpipe Fairing (Lower) P/N 205-060-810-041 (L/H) P/N 205-060-810-042 (R/H)	Extinguisher Bottle	16 x 18	Camlock 4

Figure 52-1. Fuselage Access Doors, Covers, and Panels (Sheet 2 of 4)

• COPYRIGHT © 2007 BY DART AEROSPACE LTD. •
THIS DOCUMENT IS PRIVATE AND CONFIDENTIAL AND IS SUPPLIED ON THE EXPRESS CONDITION THAT IT IS NOT TO BE USED FOR ANY PURPOSE OR COPIED OR COMMUNICATED TO ANY OTHER PERSON WITHOUT WRITTEN PERMISSION FROM DART AEROSPACE LTD.

ITEM	NOMENCLATURE	ACCESSES	DIMENSIONS (INCHES)	RETAINER TYPE	QTY
14	Door Assembly P/N 205-060-810-015 (L/H) P/N 205-060-810-016 (R/H)	Driveshaft and Electrical Disconnect Access Door	6 x 8	Latch Hinge	1 1
15	Door Assembly	Electrical Control Access Door	25 x 42	Hinge Latch	2 2
16	Door Assembly	General Access Door	18 x 35	Hinge Latch	2 2
17	Door Assembly	Electronic Equipment Access Door	24 x 40	Hinge Latch	2 2
18	Access Panel P/N D212-725-1-001	Landing Gear Attach Structure	9 x 13	Screw	20
19	Cover	Pylon Damper and Collective Servo	12 x 13	Screw	19
20	Cover	Hydraulic System 1 (Test)	10 x 12	Camlock	10
21	Cover	Hydraulic System 2 (Test)	10 x 12	Camlock	7
22	Door Assembly P/N D212-725-1-003	Transmission Lift Link and Cyclic/Collective Servos	11 x 19	Camlock	18
23	Cover	Electrical Connection	7 x 10	Screw	8
24	Door	Inspection Area	3 x 7	Screw	8
25	Door	Inspection Area	6 x 6	Screw	8
26	Door	Collective Jackshaft, Copilot Collective Stick Elbow and Throttle	8 x 12	Screw	14
27	Door	Copilot Flight Control Tubes and Cyclic Jackshaft	7 x 11	Screw	12
28	Door	Inspection Area	5 x 5	Screw	6
29	Door	Anti-torque Controls	8 x 10	Screw	14
30	Cowl Assembly P/N 205-060-807-084	Upper Engine Cowl	20 x 44	Hinge Latch	2 2
31	Door Assembly P/N 205-031-221-002	Transmission Mounts, Fuel Shutoff Valve. Main Driveshaft Coupling and Quill, Hydraulic Pump and Manifold	10 x 33	Screw	25
32	Door Assembly	External Power Connection	3 x 6	Hinge/Dzus	1

Figure 52-1. Fuselage Access Doors, Covers, and Panels (Sheet 3 of 4)

• COPYRIGHT © 2007 BY DART AEROSPACE LTD. •
THIS DOCUMENT IS PRIVATE AND CONFIDENTIAL AND IS SUPPLIED ON THE EXPRESS CONDITION THAT IT IS NOT TO BE USED FOR ANY PURPOSE OR COPIED OR COMMUNICATED TO ANY OTHER PERSON WITHOUT WRITTEN PERMISSION FROM DART AEROSPACE LTD.

ITEM	NOMENCLATURE	ACCESSES	DIMENSIONS (INCHES)	RETAINER TYPE	QTY
33	Door	Pilot Cyclic Controls	7 x 11	Screw	12
34	Door	Pilot Cyclic Controls	8 x 12	Screw	14
35	Door	Heat Distribution Valve	5 x 10	Screw	10
36	Door	Heat Distribution Valve	6 x 6	Screw	8
37	Door	Inspection Area	3 x 7	Screw	8
38	Cover	Electrical Connection	7 x 10	Screw	8
39	Door Assembly P/N D212-725-1-004	Transmission Lift Link and Cyclic Servo	11 x 19	Camlock	18
40	Cover P/N D212-725-1-002	Pylon Damper. Cyclic/Collective Servo, System 1 Hydraulic Pump. Rotor Tach Generator, Oil Level Sight Glass	12 x 13	Screw	19
41	Door	Landing Gear Attach Structure	9 x 13	Screw	20
42	Door Assembly	Heater Noise Suppressor	23 x 34	Hinge Latch	2 2
43	Door Assembly	Heater Noise Suppressor	19 x 35	Hinge Latch	2 2
44	Door Assembly	Anti-torque Hydraulic Servo Oil Cooler Blower	25 x 42	Hinge Latch	2 2

Figure 52-1. Fuselage Access Doors, Covers, and Panels (Sheet 4 of 4)

• COPYRIGHT © 2007 BY DART AEROSPACE LTD. •
THIS DOCUMENT IS PRIVATE AND CONFIDENTIAL AND IS SUPPLIED ON THE EXPRESS CONDITION THAT IT IS NOT TO BE USED FOR ANY PURPOSE OR COPIED OR COMMUNICATED TO ANY OTHER PERSON WITHOUT WRITTEN PERMISSION FROM DART AEROSPACE LTD.

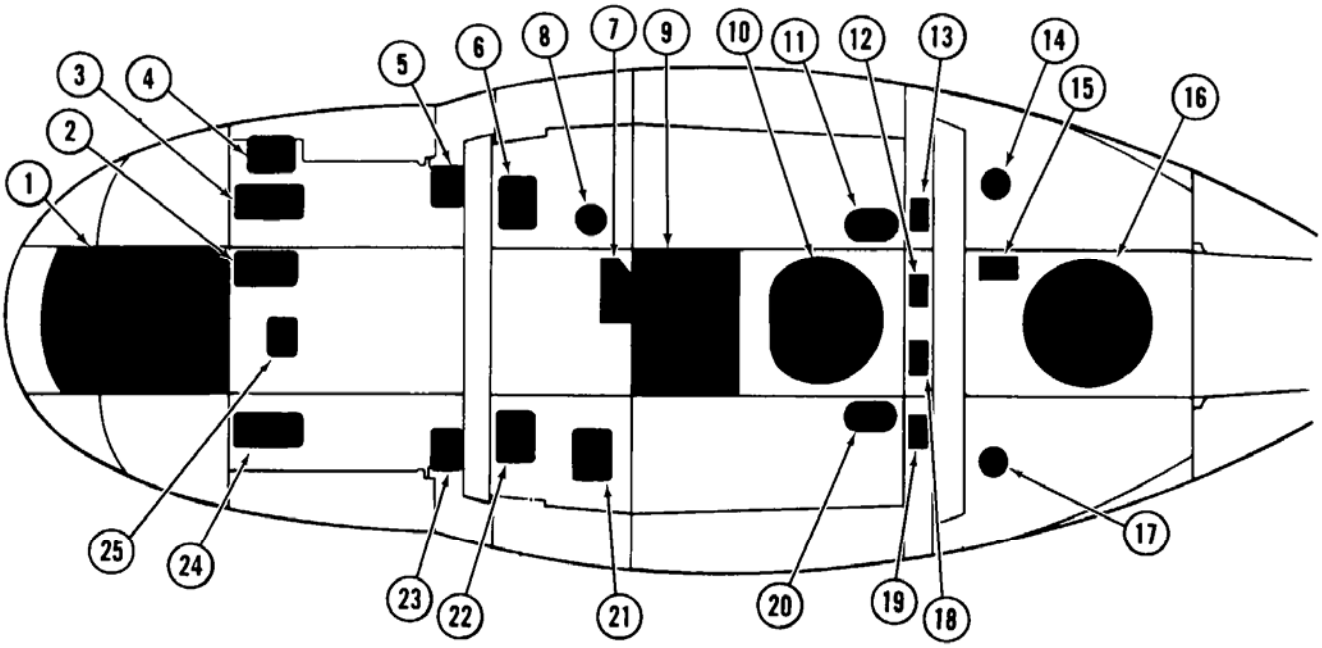

FUSELAGE SKIN — LOOKING UP

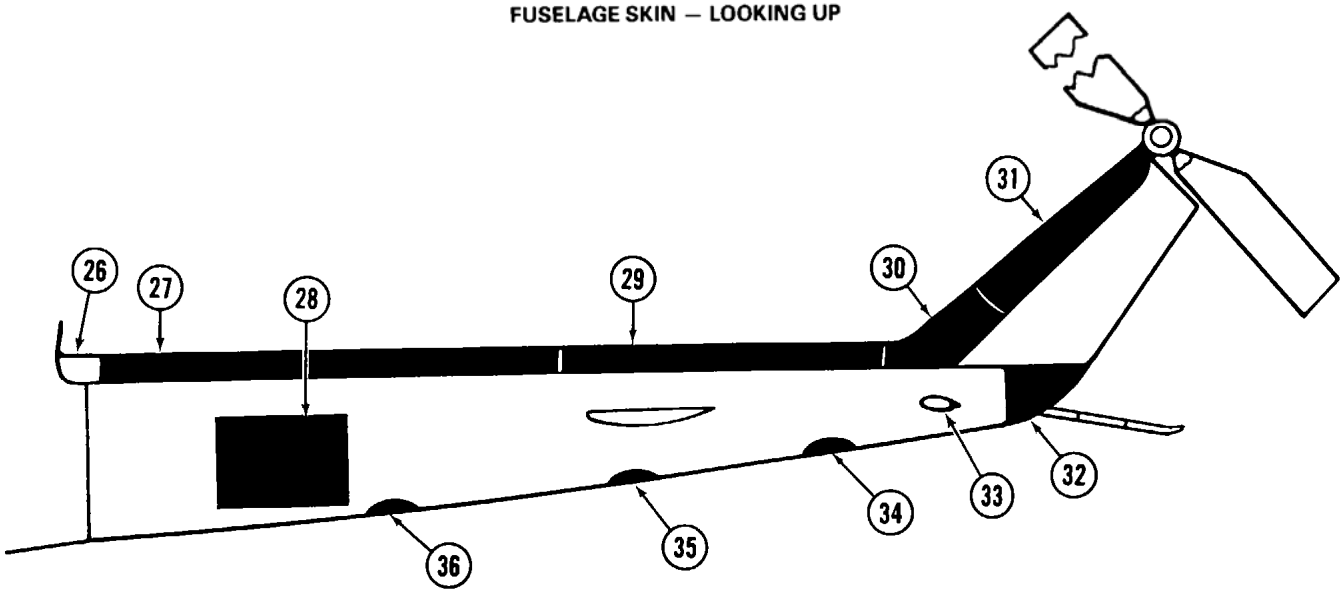

LEFT SIDE TAILBOOM

Figure 52-2. Lower Fuselage and Tailboom Access Doors, Covers, and Panels (Sheet 1 of 3)

• COPYRIGHT © 2007 BY DART AEROSPACE LTD. •
THIS DOCUMENT IS PRIVATE AND CONFIDENTIAL AND IS SUPPLIED ON THE EXPRESS CONDITION THAT IT IS NOT TO BE USED FOR ANY PURPOSE OR COPIED OR COMMUNICATED TO ANY OTHER PERSON WITHOUT WRITTEN PERMISSION FROM DART AEROSPACE LTD.

ITEM	NOMENCLATURE	ACCESSES	DIMENSIONS (INCHES)	RETAINER TYPE	QTY
1	Panel Assembly	Forward Electrical Compartment	14 x 30	Screw	14
2	Door	Anti-torque Controls	6.3 x 12.7	Screw	18
3	Door	Copilot Cyclic Controls	8 x 14	Screw	14
4	Door	Anti-torque Controls	8 x 10	Screw	14
5	Door	Collective Throttle Controls and Landing Gear Support Structure and Aft Magnetic Brake	7 x 9	Screw	13
6	Door	Landing Gear Support Structure	13 x 20	Screw	12
7	Door	Collective/Cyclic Control Tubes	7 x 13	Screw	15
8	Door	General Inspection Area	7 x 7	Screw	8
9	Antenna Door	ADF Sense Antenna	26 x 28	Screw	13
10	Door Assembly	Cargo Hook and Lift Beams	24 x 25	Screw	12
11	Door	Fuel Boost Pump	12 x 16	Screw	15
12	Door	Fuel Cell Interconnect	6 x 7	Screw	10
13	Door	Fuel Cell interconnect and Aft Landing Gear Support Structure	6 x 8	Screw	14
14	Door	Fuel Cell Interconnect	6 x 6	Screw	8
15	Door	Fuel Cell Interconnect	6 x 7	Screw	10
16	Door Assembly	Anti-torque Servo Control Tubes	24 x 24	Screw	12
17	Door	Heater Compartment	6 x 6	Screw	8
18	Door	Fuel Cell Interconnect	6 x 7	Screw	10
19	Door	Fuel Cell Interconnect and Aft Landing Gear Support Structure	6 x 8	Screw	14

Figure 52-2. Lower Fuselage and Tailboom Access Doors, Covers, and Panels (Sheet 2 of 3)

• COPYRIGHT © 2007 BY DART AEROSPACE LTD. •
THIS DOCUMENT IS PRIVATE AND CONFIDENTIAL AND IS SUPPLIED ON THE EXPRESS CONDITION THAT IT IS NOT TO BE USED FOR ANY PURPOSE OR COPIED OR COMMUNICATED TO ANY OTHER PERSON WITHOUT WRITTEN PERMISSION FROM DART AEROSPACE LTD.

ITEM	NOMENCLATURE	ACCESSES	DIMENSIONS (INCHES)	RETAINER TYPE	QTY
20	Door	Fuel Boost Pump	12 x 16	Screw	15
21	Door	Anti-torque Lever	8 x 10	Screw	12
22	Door	Landing Gear Attach Structure	8 x 11	Screw	12
23	Door	General Inspection Area and Collective Throttle Controls	7 x 9	Screw	13
24	Door	Pilot Cyclic Controls	8 x 14	Screw	14
25	Door	Anti-torque Controls and Lateral Magnetic Brake	6 x 8	Screw	10
26	Cover Assembly	Tail Rotor Driveshaft Forward Coupling	7 x 15	Hinge Dzus	1 2
27	Cover Assembly	Tail Rotor Driveshaft No. 2 and Hanger	15 x 80	Hinge Dzus	1 4
28	Door Assembly	Baggage Compartment (Right Side Only)	20 x 30	Hinge Dzus	2 1
29	Cover Assembly	Tail Rotor Driveshafts No. 3 and No.4	15 x 80	Hinge Dzus	1 4
30	Cover Assembly	42° Gearbox, Tail Rotor Driveshaft No. 3 and No.4 Couplings	35 x 39	Dzus	10
31	Door Assembly	Tail Rotor Driveshaft No. 4 and 90° Gearbox Mount	26 x 62	Dzus	5
32	Fairing Assembly	Tail Skid Attach	17 x 20	Screw	12
33	Fairing Assembly	Position Light, Anti-torque Control Bellcrank, Support, and Tube	5 x 10	Screw	20
34	Door	Flight Control Tubes	17 x 20	Screw	18
35	Door	Radar Altimeter Antenna and Pilot/Copilot Transmitter Flux Valves	17 x 20	Screw	18
36	Door	Flight Control Tubes	17 x 20	Screw	18

Figure 52-2. Lower Fuselage and Tailboom Access Doors, Covers, and Panels (Sheet 3 of 3)

• COPYRIGHT © 2007 BY DART AEROSPACE LTD. •
THIS DOCUMENT IS PRIVATE AND CONFIDENTIAL AND IS SUPPLIED ON THE EXPRESS CONDITION THAT IT IS NOT TO BE USED FOR ANY PURPOSE OR COPIED OR COMMUNICATED TO ANY OTHER PERSON WITHOUT WRITTEN PERMISSION FROM DART AEROSPACE LTD.

52.2 CREW DOORS.

52.2.1 Crew Doors – Description and Maintenance

Two crew doors (Figure 52-1) are hinged on the forward side and are equipped with a latch assembly, which may be operated from either side of door, to secure door in closed position. Each door incorporates three transparent acrylic windows; forward, upper and lower (adjustable) windows. In an emergency, doors may be jettisoned by pulling the EMERGENCY RELEASE handle mounted inside cabin forward of each door.

52.2.1.1 Removal

Open door. Support door while pulling EMERGENCY RELEASE handle to retract hinge pins. Lift off door.

52.2.1.2 Disassembly

NOTE

Disassemble door only to the extent necessary to effect repairs. For maintenance of crew door windows, refer to paragraph 52.7.4. Disassemble latch as follows:

52.2.1.2.1 Disconnect rod (9, Figure 52-4) from latch arm by removing cotter pin and pin (16).

52.2.1.2.2 Remove access door (29) and plug button from inner face of door.

52.2.1.2.3 Disconnect rod (21) from bellcrank (20) by removing cotter pin and pin (22). Unscrew aft end of rod from rod end on latch assembly (13). Remove rod through aft side of door.

52.2.1.2.4 Remove screws (17) to detach latch plate from inner face of door. Hold latch shaft (15) while sliding latch assembly (13) off inboard end.

52.2.1.2.5 Remove outer handle assembly (14) by removing screws attaching escutcheon to door and pulling handle off end of latch shaft (15).

52.2.1.2.6 Disconnect rod (25) from bellcrank (20) by detaching spring (23) and removing pin (24). Remove plug button from inner face of door and remove bolt (19) with nut and washers to detach bellcrank from support.

52.2.1.2.7 To remove either latch rod (9 or 25), remove spring pin (8), unscrew roller assembly (2), and remove rod downward through door.

52.2.1.2.8 To remove latch striker from doorpost, disconnect ejection cable (19, Figure 52-5) from striker (1) by removing cotter pin and pin (3). Detach spring (2). Remove bolt with nut and washers, and pull striker out through backing plates.

52.2.1.2.9 Detach upper forward striker (1, Figure 52-4) from longeron by removing three screws. On upper aft striker (7) remove two screws from slotted holes, and use access hole on upper side of longeron to remove nut and washer from countersunk screw to detach striker and backing plates (5 and 6).

• COPYRIGHT © 2007 BY DART AEROSPACE LTD. •
THIS DOCUMENT IS PRIVATE AND CONFIDENTIAL AND IS SUPPLIED ON THE EXPRESS CONDITION THAT IT IS NOT TO BE USED FOR ANY PURPOSE OR COPIED OR COMMUNICATED TO ANY OTHER PERSON WITHOUT WRITTEN PERMISSION FROM DART AEROSPACE LTD.

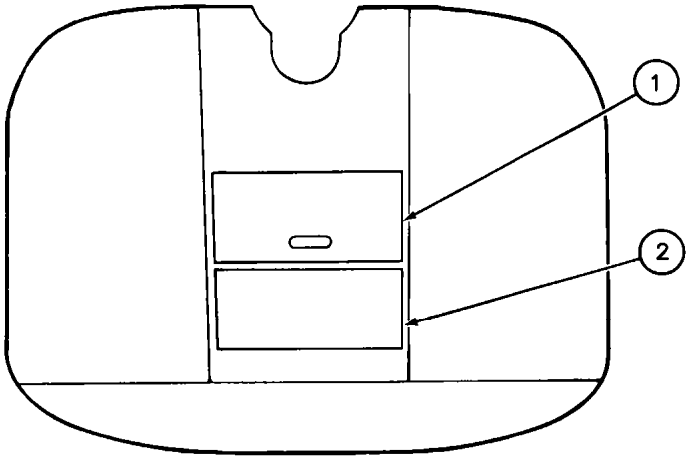

CABIN WALL
VIEW LOOKING AFT (STA 129.00)

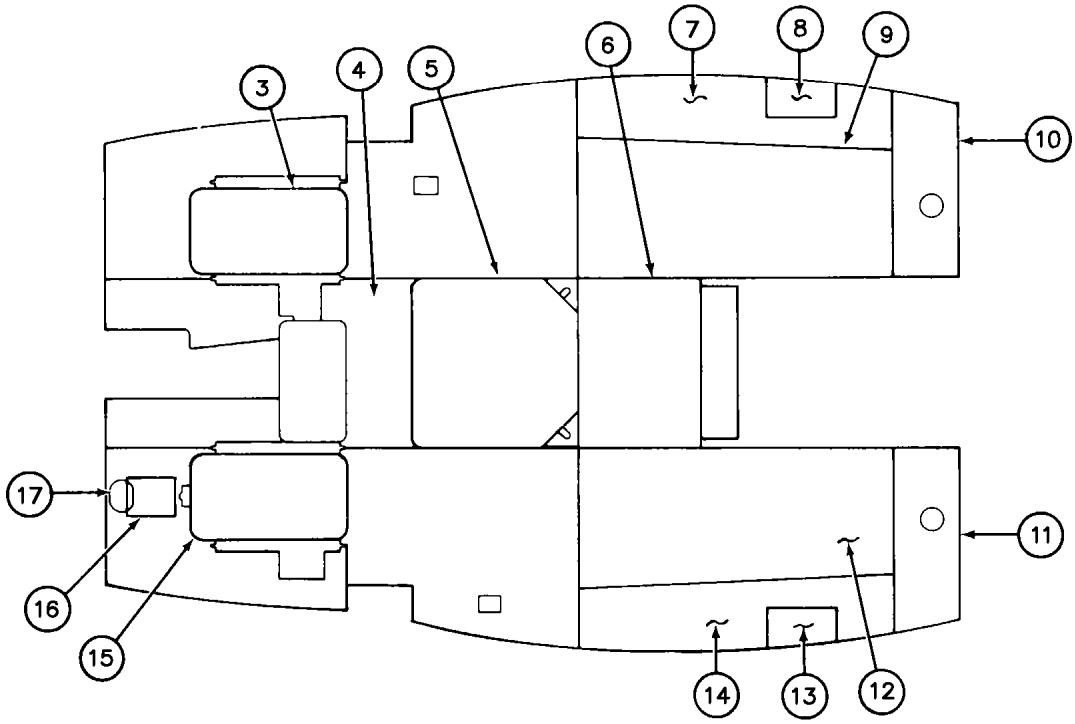

CABIN FLOOR – VIEW LOOKING DOWN

Figure 52-3. Interior Cabin Access Doors, Covers, and Panels (Sheet 1 of 2)

• COPYRIGHT © 2007 BY DART AEROSPACE LTD. •
THIS DOCUMENT IS PRIVATE AND CONFIDENTIAL AND IS SUPPLIED ON THE EXPRESS CONDITION THAT IT IS NOT TO BE USED FOR ANY PURPOSE OR COPIED OR COMMUNICATED TO ANY OTHER PERSON WITHOUT WRITTEN PERMISSION FROM DART AEROSPACE LTD.

ITEM	NOMENCLATURE	ACCESSES	DIMENSIONS (INCHES)	RETAINER TYPE QTY
1	Door Assembly	Hydraulic Components, Lift Beam Link and Cargo Hook	15 x 28	Sleeve Bolt37
2	Door Assembly	Cyclic Hydraulic Servos and Cargo Hook	11 x 28	Screw 38
3	Door Assembly	Pilot Cyclic Controls	17 x 29	Screw 6
4	Door Assembly	Collective Jackshaft	15 x 27	Screw 7
5	Door Assembly	Cyclic Mixing Bellcrank	29 x 29	Bolt 14
6	Door Assembly	Cyclic/Collective Controls	21 x 29	Bolt 6
7	Panel Assembly	General Inspection Area	14 x 54	Screw 104
8	Cover	Auxiliary Fuel Connections	8 x 13	Screw 17
9	Panel Assembly	Forward Fuel Cell	24 x 54	Screw 106
10	Panel Assembly	Fuel Cell Interconnect	8 x 13	Screw 30
11	Panel Assembly	Fuel Cell Interconnect	24 x 54	Screw 30
12	Panel Assembly	Forward Fuel Cell	24 x 54	Screw 106
13	Cover	Auxiliary Fuel Connection	8 x 13	Screw 17
14	Panel Assembly	General Inspection Area	14 x 54	Screw 104
15	Door Assembly	Copilot Cyclic Controls	17 x 29	Screw 6
16	Door	Copilot Cyclic Controls	7.7 x 9.7	Screw 6
17	Door	Copilot Cyclic Controls	3 x 4	Screw 4

Figure 52-3. Interior Cabin Access Doors, Covers, and Panels (Sheet 2 of 2)

• COPYRIGHT © 2007 BY DART AEROSPACE LTD. •
THIS DOCUMENT IS PRIVATE AND CONFIDENTIAL AND IS SUPPLIED ON THE EXPRESS CONDITION THAT IT IS NOT TO BE USED FOR ANY PURPOSE OR COPIED OR COMMUNICATED TO ANY OTHER PERSON WITHOUT WRITTEN PERMISSION FROM DART AEROSPACE LTD.

52.2.1.3 Inspection

52.2.1.3.1 Perform operational check for both crew doors.

52.2.1.3.2 Inspect visible portions of latch mechanism for secure installation, corrosion, and damage.

52.2.1.3.3 Inspect visible portions of jettison mechanism for secure installation, corrosion, and damage.

52.2.1.3.4 Inspect door structure and hinges for cracks and distortion.

52.2.1.3.5 Inspect crew door windows (paragraph 52.7.4.2).

52.2.1.3.6 Inspect door seals for security and deterioration.

52.2.1.4 Repair or replacement

MATERIALS REQUIRED

NUMBER	NOMENCLATURE
C-004	Grease
C-308	Adhesive

NOTE

Repair of crew door latch and jettison mechanism is restricted to replacement of unserviceable parts.

52.2.1.4.1 If replacing a door, or hinge halves (26, Figure 52-4) on door, peel shims under hinges, as required to obtain alignment. Spring assemblies, attaching hardware, and bumpers can be replaced if damaged or missing.

52.2.1.4.2 Replace any damaged and unserviceable parts of assemblies in latch installation.

52.2.1.4.3 Repair crew door structural damage. Refer to BHT-MED-SRM-1 and to FAA Publication AC 43.13-1B, Aircraft Inspection and Repair Manual for structural maintenance.

52.2.1.4.4 Repair damaged door windows (paragraph 52.7.4.2).

52.2.1.4.5 Install new door seals as required (paragraph 52.1.2).

52.2.1.4.6 If hinge halves (27) on nose structure are replaced, peel shims, as required, for alignment, and install with long hinge pin bushings inserted through nose skin. Apply adhesive (C-308) to fill gaps between bushings and skin.

52.2.1.4.7 Lubricate moving parts of latch at installation with grease (C-004).

52.2.1.5 Assembly

52.2.1.5.1 Position latch striker (1, Figure 52-4) on door post and install bolt retaining hardware.

52.2.1.5.2 Install spring (2).

52.2.1.5.3 Position cable (9.) end clevis over latch striker (1) and install and secure pin (3).

52.2.1.5.4 Position backing plates (5 and 6, Figure 52-4) on door frame in position indexed at time of removal. Position upper aft striker (7) on backing plates and install retaining screws, washers, and nuts.

52.2.1.5.5 Position upper forward striker (1) on door frame and secure with screws.

52.2.1.5.6 Position latch assembly and inboard handle in position in door. Install screws (17).

52.2.1.5.7 Position shaft (15) with outer handle on door (into latch assembly) and secure handle with two screws.

52.2.1.5.8 Position rod (21) in door and thread into rod end in latch assembly.

52.2.1.5.9 Position bellcrank (20) in door and secure with bolt (19), washers, and nut.

• COPYRIGHT © 2007 BY DART AEROSPACE LTD. •
THIS DOCUMENT IS PRIVATE AND CONFIDENTIAL AND IS SUPPLIED ON THE EXPRESS CONDITION THAT IT IS NOT TO BE USED FOR ANY PURPOSE OR COPIED OR COMMUNICATED TO ANY OTHER PERSON WITHOUT WRITTEN PERMISSION FROM DART AEROSPACE LTD.

52.2.1.5.10 Position rod (21) clevis on bellcrank (20). Secure with pin (22) and cotter pin.

52.2.1.5.11 Position rod (9) in door and thread into roller (2). Do not install spring pin (8) at this time.

52.2.1.5.12 Position rod (9) on latch assembly (13) and install pin (16). Secure with cotter pin.

52.2.1.5.13 Position rod (25) in door and thread into roller (2). Do no install spring pin at this time.

52.2.1.5.14 Position rod (25) on bellcrank (20). Secure with pin (24) and cotter pin.

52.2.1.5.15 Install spring (23).

52.2.1.5.16 Adjust latch assembly as follows:

52.2.1.5.16.1 Install door on helicopter (paragraph 52.2.1.6).

52.2.1.5.16.2 Close door and check position of strikers (1 and 7) and rollers (2).

52.2.1.5.16.3 Adjust rods (9 and 25) to obtain 0.08 in. (2.03 mm) clearance as illustrated. Ensure rods have 0.30 in. (7.62 mm) thread engagement as shown.

52.2.1.5.16.4 Adjust strikers (1 and 7) as required to hold door firmly in closed position.

52.2.1.5.16.5 Install spring pins (8) in rods (9 and 25) and roller (2) to secure rollers.

52.2.1.5.17 Install access door (29).

52.2.1.5.18 Perform operational check (paragraph 52.2.2.3).

52.2.1.6 Installation

52.2.1.6.1 Position door on helicopter.

52.2.1.6.2 Pull jettison handle (30, Figure 52-5) to retract hinge pins (17 and 23).

52.2.1.6.3 Align hinge halves and release jettison handle.

52.2.1.6.4 Close door slowly and observe action of latch assembly.

52.2.1.6.5 Slowly move handle (14, Figure 52-4) to lock position. Observe engagement of two latch rollers (2) with upper strikers and for clearance of 0.08 in. (2.03 mm) above each roller when fully extended.

52.2.1.6.6 It required, adjust rollers to obtain proper clearance. Maintain minimum thread engagement of 0.30 in. (7.62 mm) as illustrated.

52.2.1.6.7 Adjust position of strikers (1, 7, and 12) as required.

52.2.1.6.8 When adjustment is satisfactory, install spring pin (8) to secure each roller.

52.2.1.6.9 Perform operational check (paragraph 52.2.2.3)

52.2.2 Crew Door Jettison Mechanism

52.2.2.1 Removal

52.2.2.1.1 Remove crew door (paragraph 52.2.1.1).

52.2.2.1.2 Remove cotter pin, washer, and pin (21, Figure 52-5) to detach ejection handle cable (22) from plate (25). When required, detach two clamps (29) securing tube (28) to support angle and pull handle assembly up through grommet (27).

52.2.2.1.3 Detach swivel (20) from plate (25) by removing nut and washer. Pull swivel from end of cable (19). Keep nut and washer with

52.2.2.1.4 Remove two bolts (18) and washers to detach support (16) from structure. Pull hinge pins (17 and 23) free of hinge bushings, and remove assembled ejection mechanism from inboard side of nose structure.

• COPYRIGHT © 2007 BY DART AEROSPACE LTD. •
THIS DOCUMENT IS PRIVATE AND CONFIDENTIAL AND IS SUPPLIED ON THE EXPRESS CONDITION THAT IT IS NOT TO BE USED FOR ANY PURPOSE OR COPIED OR COMMUNICATED TO ANY OTHER PERSON WITHOUT WRITTEN PERMISSION FROM DART AEROSPACE LTD.

52.2.2.1.5 Disassemble ejection mechanism as follows:

52.2.2.1.5.1 Remove cotter pins and two pins (14) to detach upper and lower hinge pins (17 and 23) from plate (25) and link (13).

52.2.2.1.5.2 Remove bolt (26) with nut, washers, and spacer (24) to separate plate and link from support (16).

52.2.2.1.6 Remove ejection cable as follows:

52.2.2.1.6.1 Disconnect aft end fork of cable (9) from latch striker (1) by removing cotter pin and pin (3).

52.2.2.1.6.2 Pull cable aft out of flex tube (7) leaving tube in place.

52.2.2.2 Installation

52.2.2.2.1 Check ends of jettison cable flex tube for proper installation:

52.2.2.2.1.1 Aft end of flex tube (7, Figure 52-5) should be positioned vertically at F.S. 68.96 in door post, secured between clamp (4) and spacer (5) attached to bracket (6) on structure with two screws, washers, and nuts. End of tube should extend 0.10 in. (2.54 mm) above clamp.

52.2.2.2.1.2 Forward end of flex tube should pass up through grommet (12) in nose structure forward of door opening, and be secured between clamp (10) and spacer (11) attached to structure with two screws, washers, and nuts. End of tube should extend 0.10 in. (2.54 mm) above horizontal angle at W.L. 30.

52.2.2.2.2 Thread plain end of ejection cable (9) through flex tube (8) from aft end.

NOTE

Forward end of cable will be attached during installation of jettison mechanism.

52.2.2.2.3 Attach cable fork terminal on aft end of latch striker (1) with pin (3) secured by cotter pin. Verify spring (2) is attached between striker and bracket in door post.

52.2.2.2.4 Install jettison mechanism as follows:

52.2.2.2.4.1 Insert spacer (24) through pivot holes of plate (25) and link (13).

52.2.2.2.4.2 Place standard steel washer on bolt (26), and insert bolt from plate side through spacer.

52.2.2.2.4.3 Place thin aluminum washer on bolt next to spacer, and insert bolt (26) through support (16).

52.2.2.2.4.4 Install nut (15) and aluminum washer on outboard end of bolt and torque 50 to 70 in-Lbs. (5.65 to 7.91 Nm).

52.2.2.2.4.5 Position slotted ends of hinge pins (17 and 23) between plate (25) and link (13), align holes, and install pins (14) secured by cotter pins.

52.2.2.2.4.6 Position assembly in nose structure, with hinge pins inserted in hinge bushings and support (16) resting on horizontal structural member at W.L. 30.

52.2.2.2.4.7 Align support (16) to holes with plate nuts, and install two bolts (18) with aluminum washers. Torque bolts 20 to 25 in-Lbs. (2.26 to 2.82 Nm).

52.2.2.2.4.8 Position handle (30) with tube (28) inserted through grommet (27) at W.L. 35.56. Align clamps (29) to mounting holes in angle and attach with two screws, washers, and nuts.

52.2.2.2.4.9 Connect fork terminal of cable (22) to forward end of plate (25) with pin (21), washer, and cotter pin.

52.2.2.2.5 Connect cable (9) with swivel (8) to hole with bushing in middle of plate (25). Adjust cable length to remove slack with hinge pins extended and latch striker (1) held down in

• COPYRIGHT © 2007 BY DART AEROSPACE LTD. •
THIS DOCUMENT IS PRIVATE AND CONFIDENTIAL AND IS SUPPLIED ON THE EXPRESS CONDITION THAT IT IS NOT TO BE USED FOR ANY PURPOSE OR COPIED OR COMMUNICATED TO ANY OTHER PERSON WITHOUT WRITTEN PERMISSION FROM DART AEROSPACE LTD.

latching position, and tighten nut on swivel to hold end of cable securely.

52.2.2.2.6 Perform operational check (paragraph 52.2.2.3).

52.2.2.3 Operational check

52.2.2.3.1 Place door to closed and locked position.

52.2.2.3.2 Verify door is securely latched. The two upper and lower hinge pins (17 and 23, Figure 52-5) should be extended to engage strikers (1 and 7, Figure 52-4) at top of door opening with a clearance of 0.08 in. (2.03 mm) above top of each roller as illustrated. Latch (13) should fully engage latch striker (12).

52.2.2.3.3 Turn handle (14) clockwise to open position. Latch should disengage from striker and rollers should disengage to allow door to open freely.

52.2.2.3.4 Close door and turn handle (14) to horizontal position. Handle should operate smoothly and positively. Door should be held firmly against fuselage.

52.2.2.3.5 Check jettison mechanism as follows:

52.2.2.3.5.1 Close and lock door using handle (14).

52.2.2.3.5.2 Station a person inside and outside helicopter at door being checked. Pull EMERGENCY RELEASE handle. Hinge pins (17 and 23, Figure 52-5) should retract smoothly and release hinges. Striker (1) should pivot upward to release rear door latch.

52.2.2.3.5.3 If necessary, push outward on door to separate door from fuselage.

52.2.2.3.5.4 Install door (paragraph 52.2.1.6).

52.2.3 Crew Door Hinges

52.2.3.1 Crew Door Hinges - Removal

MATERIALS REQUIRED

NUMBER	NOMENCLATURE
C-305	Aliphatic Naphtha

52.2.3.1.1 Remove the crew door.

NOTE

This procedure is applicable to the upper and lower hinge half assemblies. Procedure for the upper hinge half assembly is given, differences for the lower hinge half assembly are identified.

52.2.3.1.2 Carefully remove the sealant from around the upper fixed hinge half assembly (1, Figure 52-6) and the upper movable hinge half assembly (2).

52.2.3.1.3 Remove screws (5) , nuts (7) and washers (6).

52.2.3.1.4 Remove upper fixed hinge half assembly (1), upper movable hinge half assembly (2), shim (17) from the crew door.

52.2.3.1.5 Carefully remove the remaining sealant with aliphatic naphtha (C-305).

52.2.3.2 Crew Door Hinges - Inspection

52.2.3.2.1 Inspect the applicable fixed hinge half assembly (1 or 3, Figure 52-6) for cracks, wear and holes with signs of deformation.

52.2.3.2.2 Inspect the applicable movable hinge half assembly (2 or 4) for cracks, wear and holes with signs of deformation.

52.2.3.2.3 Inspect the bushings (15 and 16) for excessive wear or play.

52.2.3.2.4 Inspect the bushings (14) for excessive wear.

52.2.3.2.5 Inspect the spring assemblies (11

• COPYRIGHT © 2007 BY DART AEROSPACE LTD. •
THIS DOCUMENT IS PRIVATE AND CONFIDENTIAL AND IS SUPPLIED ON THE EXPRESS CONDITION THAT IT IS NOT TO BE USED FOR ANY PURPOSE OR COPIED OR COMMUNICATED TO ANY OTHER PERSON WITHOUT WRITTEN PERMISSION FROM DART AEROSPACE LTD.

and 13) for excessive wear to the striker blocks.

52.2.3.2.6 Replace the spring assemblies (11 or 13) if the rivets of the striker blocks are visible.

52.2.3.3 Crew Door Hinges - Installation

MATERIALS REQUIRED

NUMBER	NOMENCLATURE
C-305	Aliphatic Naphtha
C-308	Sealant

NOTE

This procedure is applicable to the upper and lower hinge half assemblies. Procedure for the upper hinge half assembly is given, differences for the lower hinge half assembly are identified.

New hinge half assemblies can be supplied without the three mounting holes.

52.2.3.3.1 Install upper fixed hinge half assembly (1, Figure 52-6) and upper movable hinge half assembly (2) with shims (17), screws (5), nuts (7) and washers (6).

52.2.3.3.2 Temporarily install the crew door to make sure the fit is correct.

52.2.3.3.3 Remove crew door.

52.2.3.3.4 If necessary, adjust the thickness of the shims (17) to get the correct fit.

52.2.3.3.5 Apply sealant (C-308) around the edge of the upper fixed hinge half assembly (1) and the upper movable hinge half assembly (2).

52.2.3.3.6 Clean the excess sealant with aliphatic naphtha (C-305).

52.2.3.3.7 Install the crew door.

52.2.3.4 Crew Door Hinges - Repair

MATERIALS REQUIRED

NUMBER	NOMENCLATURE
C-204	Epoxy Polyamide Primer
C-321	Adhesive

52.2.3.4.1 Replace the bushings (14 and 15, Figure 52-6) as follows:

52.2.3.4.1.1 Hold the legs that contains the bushing (14 or 15) and push them out.

52.2.3.4.1.2 Make sure that the holes are free of damage.

52.2.3.4.1.3 Measure the holes and make sure that the diameters are from 0.312 to 0.313 inch (7.925 to 7.950 mm).

NOTE

Make sure that the flanges of the bushings are in the hinge assembly slot.

52.2.3.4.1.4 Apply epoxy polyamide primer (C-204) to the holes.

52.2.3.4.1.5 Hold the legs of the fixed hinge half assemblies (1 and 3) and push the new bushings (15) into position.

NOTE

Install the bushings to be flush with the inner face of the fixed hinge half assemblies.

52.2.3.4.1.6 Apply epoxy polyamide primer (C-204) to the holes.

52.2.3.4.1.7 Hold the legs of the fixed hinge half assemblies (1 and 3) and push the new bushings (14) into position.

52.2.3.4.1.8 Ream bushings (14) to have a diameter from 0.180 to 0.1885 inch (4.775 to 4.788 mm)

52.2.3.4.2 Replace bushings (16) as follows:

52.2.3.4.2.1 Hold the legs that contain the bushings (16) and push them out.

52.2.3.4.2.2 Make sure that the holes are free of damage.

52.2.3.4.2.3 Measure the holes and make sure that the diameters are from 0.312 to 0.313 inch

• COPYRIGHT © 2007 BY DART AEROSPACE LTD. •
THIS DOCUMENT IS PRIVATE AND CONFIDENTIAL AND IS SUPPLIED ON THE EXPRESS CONDITION THAT IT IS NOT TO BE USED FOR ANY PURPOSE OR COPIED OR COMMUNICATED TO ANY OTHER PERSON WITHOUT WRITTEN PERMISSION FROM DART AEROSPACE LTD.

(7.925 to 7.950 mm).

NOTE

Make sure that the ends of the bushings are flush or below the surface of the movable hinge half assembly

52.2.3.4.2.4 Apply epoxy polyamide primer (C-204) to the holes.

52.2.3.4.2.5 Ream bushings (16) to have a diameter from 0.1880 to 0.1885 inch (4.778 to 4.788 mm).

52.2.3.4.2.6 If removed, install a new bumper (18) with adhesive.

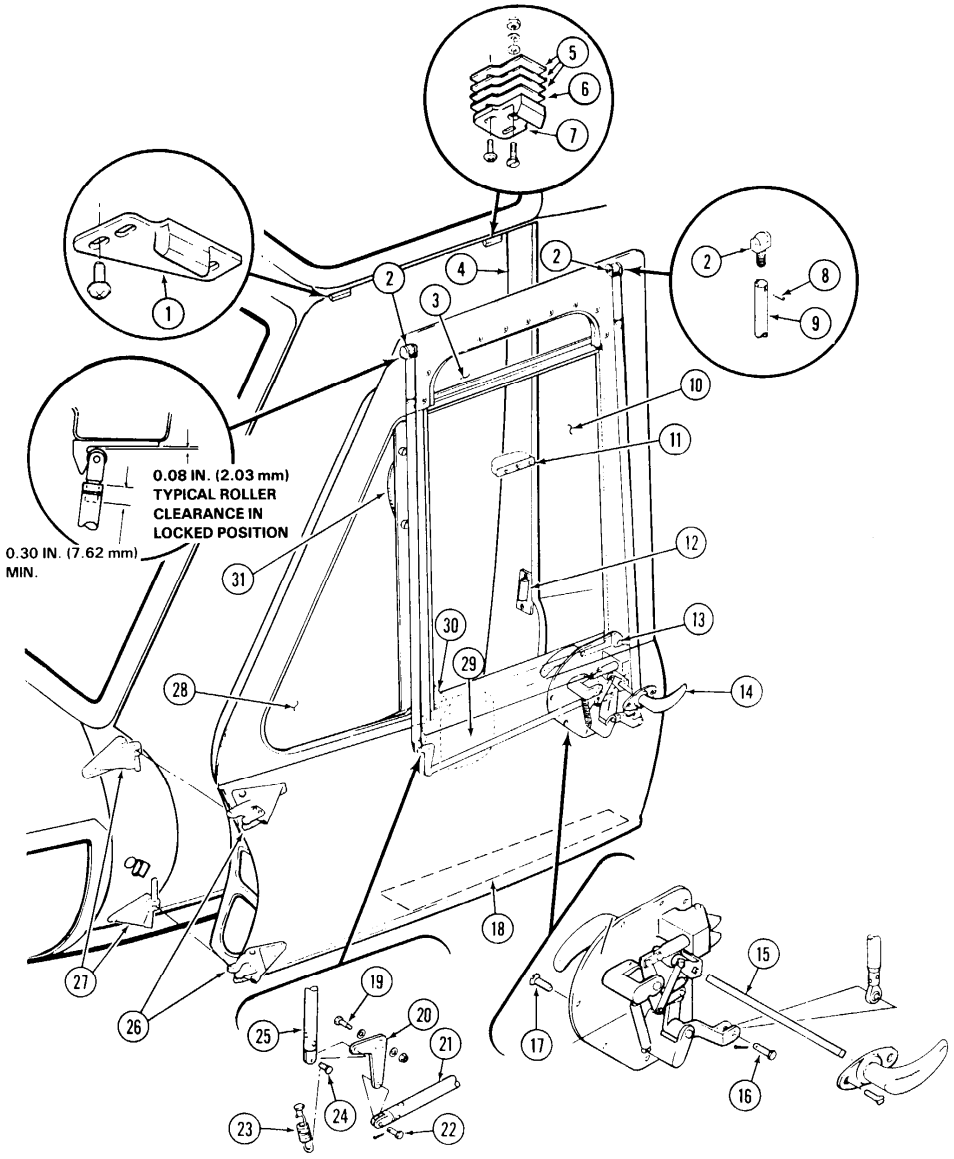

Figure 52-4. Crew Door (Sheet 1 of 2)

• COPYRIGHT © 2007 BY DART AEROSPACE LTD. •
THIS DOCUMENT IS PRIVATE AND CONFIDENTIAL AND IS SUPPLIED ON THE EXPRESS CONDITION THAT IT IS NOT TO BE USED FOR ANY PURPOSE OR COPIED OR COMMUNICATED TO ANY OTHER PERSON WITHOUT WRITTEN PERMISSION FROM DART AEROSPACE LTD.

1. Upper Forward Striker
2. Latch Rod Roller
3. Upper Window
4. Doorpost
5. Backing Plates
6. Backing Plate
7. Upper Aft Striker
8. Spring Pin
9. Latch Rod
10. Sliding Window
11. Lift Handle
12. Latch Striker
13. Latch Assembly
14. Outer Handle
15. Latch Shaft
16. Pin
17. Screw
18. Lower Access Door
19. Shouldered Bolt
20. Bellcrank
21. Rod
22. Pin
23. Spring
24. Pin
25. Latch Rod
26. Hinge Halves
27. Hinge Halves
28. Forward Window
29. Inner Access Door
30. Adjustable Stop
31. Closing Handle

Figure 52-4. Crew Door (Sheet 2 of 2)

• COPYRIGHT © 2007 BY DART AEROSPACE LTD. •
THIS DOCUMENT IS PRIVATE AND CONFIDENTIAL AND IS SUPPLIED ON THE EXPRESS CONDITION THAT IT IS NOT TO BE USED FOR ANY PURPOSE OR COPIED OR COMMUNICATED TO ANY OTHER PERSON WITHOUT WRITTEN PERMISSION FROM DART AEROSPACE LTD.

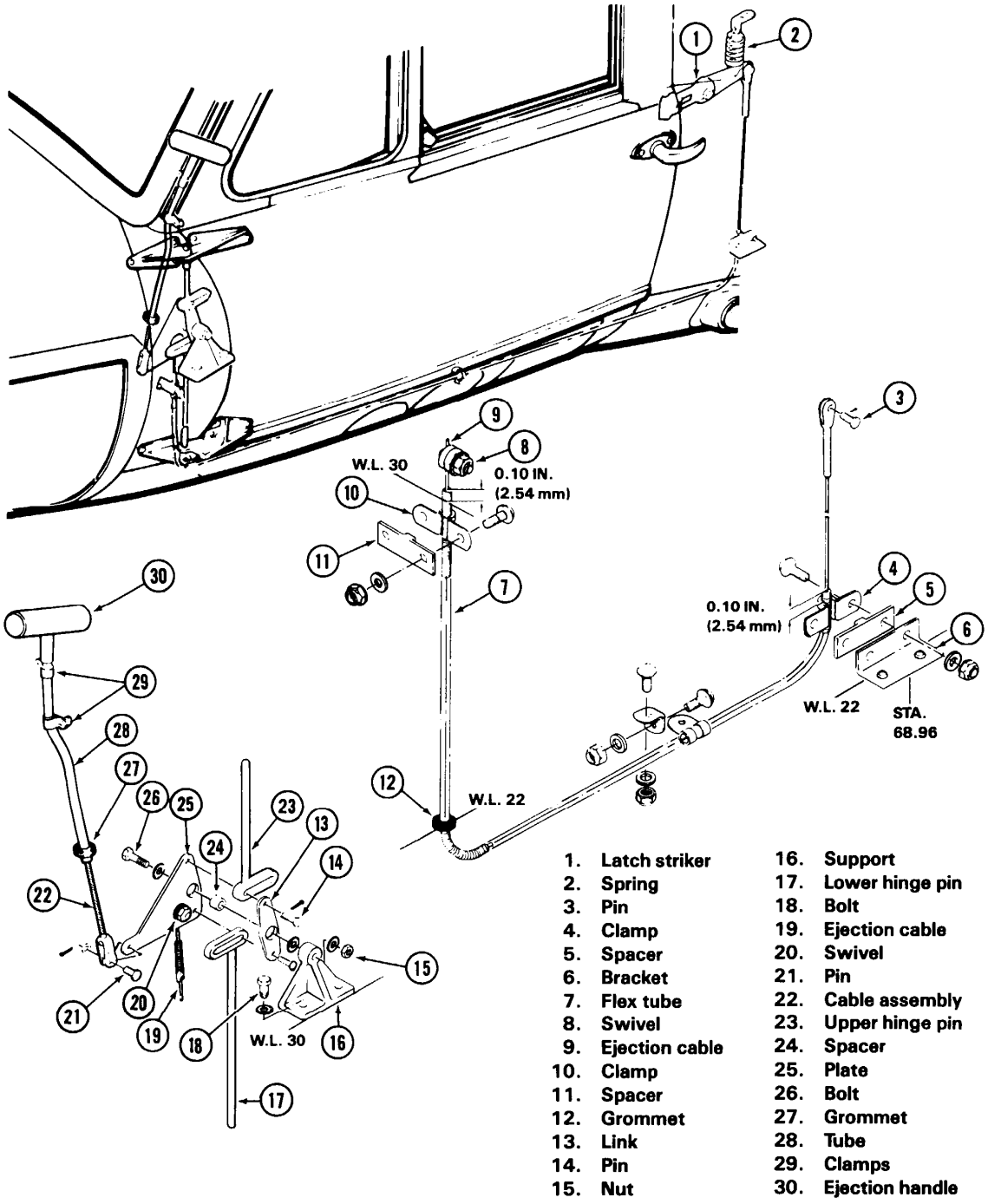

1. Latch striker
2. Spring
3. Pin
4. Clamp
5. Spacer
6. Bracket
7. Flex tube
8. Swivel
9. Ejection cable
10. Clamp
11. Spacer
12. Grommet
13. Link
14. Pin
15. Nut
16. Support
17. Lower hinge pin
18. Bolt
19. Ejection cable
20. Swivel
21. Pin
22. Cable assembly
23. Upper hinge pin
24. Spacer
25. Plate
26. Bolt
27. Grommet
28. Tube
29. Clamps
30. Ejection handle

Figure 52-5. Crew Door Jettison Mechanism

• COPYRIGHT © 2007 BY DART AEROSPACE LTD. •
THIS DOCUMENT IS PRIVATE AND CONFIDENTIAL AND IS SUPPLIED ON THE EXPRESS CONDITION THAT IT IS NOT TO BE USED FOR ANY PURPOSE OR COPIED OR COMMUNICATED TO ANY OTHER PERSON WITHOUT WRITTEN PERMISSION FROM DART AEROSPACE LTD.

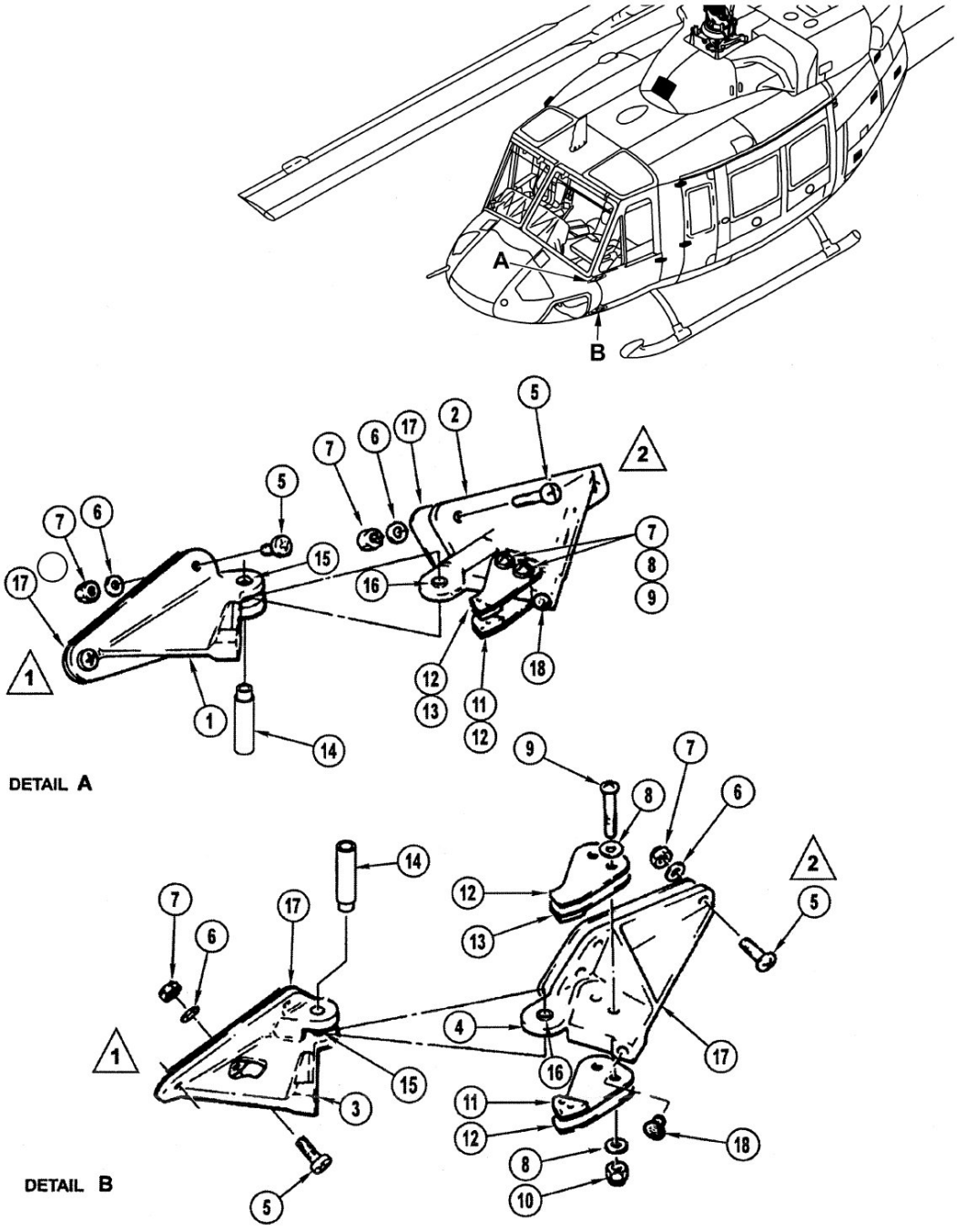

Figure 52-6. Crew Door Hinges (Sheet 1 of 2)

• COPYRIGHT © 2007 BY DART AEROSPACE LTD. •
THIS DOCUMENT IS PRIVATE AND CONFIDENTIAL AND IS SUPPLIED ON THE EXPRESS CONDITION THAT IT IS NOT TO BE USED FOR ANY PURPOSE OR COPIED OR COMMUNICATED TO ANY OTHER PERSON WITHOUT WRITTEN PERMISSION FROM DART AEROSPACE LTD.

1. Hinge half assembly, upper fixed
2. Hinge half assembly, upper movable
3. Hinge half assembly, lower fixed
4. Hinge half assembly, lower movable
5. Screw
6. Washer
7. Nut
8. Washer
9. Screw
10. Nut
11. Spring assembly, lower
12. Spring
13. Spring assembly, upper
14. Bushing
15. Bushing
16. Bushing
17. Shim
18. Bumper

Notes

1. If not previously accomplished, match drill holes to 0.190 to 0.196 (4.826 to 4.978 mm) in diameter

2. If not previously accomplished, match drill holes to 0.190 to 0.218 (4.826 to 5.537 mm) in diameter.

Figure 52-6. Crew Door Hinges (Sheet 2 of 2)

• COPYRIGHT © 2007 BY DART AEROSPACE LTD. •
THIS DOCUMENT IS PRIVATE AND CONFIDENTIAL AND IS SUPPLIED ON THE EXPRESS CONDITION THAT IT IS NOT TO BE USED FOR ANY PURPOSE OR COPIED OR COMMUNICATED TO ANY OTHER PERSON WITHOUT WRITTEN PERMISSION FROM DART AEROSPACE LTD.

52.3 PASSENGER/CARGO AREA ACCESS DOORS

The passenger/cargo area access doors consist of the sliding passenger/cargo door and the hinged panel door located on either side of the helicopter aft of the crew doors.

52.3.1 Passenger/Cargo Door

The passenger/cargo doors operate on rollers and tracks. These doors provide access to the passenger/cargo area aft of the crew stations. Each door has two push-out windows for emergency exit.

52.3.1.1 Removal

52.3.1.1.1 Unlatch cargo door (32 or 39, Figure 52-7).

52.3.1.1.2 Retract open position stop and remove screw (17), rubber stop (16), from aft end of lower door track. Remove inside handle and latch guards.

52.3.1.1.3 Slide cargo door (32) aft out of tracks.

52.3.1.2 Inspection

52.3.1.2.1 Perform an operational check for both passenger/cargo doors (paragraph 52.3.1.5).

52.3.1.2.2 Inspect latch for binding, wear, damage, and secure installation.

52.3.1.2.3 Inspect door windows (paragraph 52.7.4.2 or 52.7.5.2).

52.3.1.2.4 Inspect door structure and hinges for cracks and/or distortion.

52.3.1.2.5 Inspect door seals for secure bonding and deterioration.

52.3.1.2.6 Inspect door lock caution switch (Chapter 96)

52.3.1.3 Repair or replacement

52.3.1.3.1 Replace unserviceable parts in latch mechanism (paragraph 52.3.2).

52.3.1.3.2 Repair door structural damage. Refer to BHT-MED-SRM-1 and to FAA Publication AC 43.13-1B, Aircraft Inspection and Repair Manual for structural maintenance.

52.3.1.3.3 Repair minor damage to windows (paragraph 52.7.4.2 or 52.7.5.4).

52.3.1.3.4 Repair or replace damaged or unserviceable seals (paragraph 52.1.2).

52.3.1.4 Installation

CAUTION

205-032-669-173 AND -174 PASSENGER/CARGO DOORS MAY BE USED AS A REPLACEMENT FOR 205-032-669-009 AND -010 RESPECTIVELY. OLD PASSENGERS/CARGO DOOR ASSEMBLIES SHALL BE REPLACED IN PAIRS. A MIXING (UNSYMMETRICAL ARRANGEMENT) OF DOORS PRIOR TO -173, AND DOORS -173, -174, AND SUB. IS NOT AUTHORIZED. THE 205-032-669-173 AND -174 PASSENGER/CARGO DOORS DO NOT REQUIRE 212-030-629-101 AND -102 DOOR DEFLECTORS USED ON EMERGENCY FLOAT KIT.

52.3.1.4.1 If new door is being installed, install all attaching hardware.

52.3.1.4.2 Position cargo door (32 or 39, Figure 52-7) with forward edge in line with aft end of door tracks.

52.3.1.4.3 Start rollers and slider through cut-outs at aft ends of tracks. Push cargo door (32) forward.

52.3.1.4.4 Install rubber stop (16) with screw

• COPYRIGHT © 2007 BY DART AEROSPACE LTD. •
THIS DOCUMENT IS PRIVATE AND CONFIDENTIAL AND IS SUPPLIED ON THE EXPRESS CONDITION THAT IT IS NOT TO BE USED FOR ANY PURPOSE OR COPIED OR COMMUNICATED TO ANY OTHER PERSON WITHOUT WRITTEN PERMISSION FROM DART AEROSPACE LTD.

(17) at aft end of lower track on fuselage. Install inside handle and latch guards, if not previously accomplished.

52.3.1.4.5 Perform operational check (paragraph 52.3.1.5).

52.3.1.5 Operational check and adjustment

MATERIALS REQUIRED

NUMBER	NOMENCLATURE
C-405	Lockwire

52.3.1.5.1 Place door to full closed and latched position. Verify upper edge of door is parallel to top of cabin door frame.

52.3.1.5.2 Use adjusting screw (8, Figure 52-8) to adjust so upper and lower cams (9) will bottom simultaneously. Secure screws after adjustment has been obtained using lockwire (C-405).

52.3.1.5.3 If door is out of alignment, loosen screws attaching roller support and slider (or roller) support on rear edge of door. Adjust slider support (lowest of two supports on rear edge parallel to door frame). Tighten slider support screws.

52.3.1.5.4 Adjust roller support (upper of two on rear edge) so roller is fully engaged in track. Tighten attaching screws.

52.3.1.5.5 Operate door through full travel while verifying all rollers on upper edge are fully engaged in track at all positions. Adjust roller supports as required.

52.3.1.5.6 With door fully closed and latched, check that lower door track is engaged not less than 0.25in. (6.35 mm) in cabin door channel without restricting door travel through full range from closed to open positions. Tighten door track attaching screws after adjustment.

52.3.1.5.7 Adjust lock caution light switch (Chapter 96).

52.3.2 Passenger/Cargo Door Latches

52.3.2.1 Removal

NOTE

The following instructions are for removing upper door latch. Procedures for removing lower door latch are the same.

Remove latch parts only to the extent necessary to accomplish required repairs.

Repair of latch components is restricted to replacement of unserviceable parts.

52.3.2.1.1 Unhook tension spring (6, Figure 52-8) from latch (1) and from hanger (2) on door.

52.3.2.1.2 Remove cotter pin, washer, and guide pin from actuating arm (4) and door latch.

52.3.2.1.3 Remove cotter pin, washer, and guide from door latch and door latch support (7).

52.3.2.1.4 Remove latch.

52.3.2.2 Installation

NOTE

The following instructions are for installing the upper door latch. Procedure for installing the lower door latch is the same.

52.3.2.2.1 Insert door latch (1, Figure 52-8) in door latch support (7).

52.3.2.2.2 Align door latch to door latch support and insert guide pin. Secure guide pin with washer and cotter pin.

52.3.2.2.3 Align actuating arm (4) to door latch and insert guide pin. Guide pin with washer and cotter pin.

52.3.2.2.4 Connect tension spring (6) to door latch and to hanger (2) on door structure.

• COPYRIGHT © 2007 BY DART AEROSPACE LTD. •
THIS DOCUMENT IS PRIVATE AND CONFIDENTIAL AND IS SUPPLIED ON THE EXPRESS CONDITION THAT IT IS NOT TO BE USED FOR ANY PURPOSE OR COPIED OR COMMUNICATED TO ANY OTHER PERSON WITHOUT WRITTEN PERMISSION FROM DART AEROSPACE LTD.

CHAPTER 52 – DOORS AND WINDOWS (52-00-00)

52.3.3 Annual Functional Inspection for Crew and Passenger/Cargo Doors

MATERIALS REQUIRED

NUMBER	NOMENCLATURE
C-100	Chemical Film Material
C-204	Primer
C-208	Epoxy/Zinc Coating
C-305	Aliphatic Naphtha
C-306	Toluene
C-307	Adhesive
C-309	Methyl-Ethyl-Ketone (MEK)
C-311	Adhesive
C-318	Cleaning Compound
C-344	Cleaner
C-406	Aluminum Oxide Cloth
C-407	Abrasive Pad
C-423	Abrasive Cloth or Paper

52.3.3.1 Perform emergency ejection check on crew doors (paragraph 52.2.2.3). Inspect as follows:

52.3.3.1.1 Check for contamination and corrosion. If any exists proceed to step 52.3.3.2.

52.3.3.1.2 Check for damaged seal. If damage exists, refer to step 52.3.3.5.

52.3.3.1.3 Check for damaged locking pin hole damage. If damage exists, refer to step 52.3.3.6.

52.3.3.2 Remove contamination as follows:

52.3.3.2.1 Scrub affected area using clean, lint free cloths and cleaning compound (C-3l8) until free of contaminant.

52.3.3.2.2 Thoroughly rinse with water.

52.3.3.2.3 Dry with clean, lint-free cloths or filtered, compressed air.

52.3.3.2.4 Inspect surface for corrosion and/or surface damage or seal deterioration. If none exists, return to service. If any of these conditions exists, proceed to next step.

52.3.3.3 Remove minor corrosion and treat area as follows:

NOTE

Corrosion pits shall be no larger than 0.060 in. (1.524 mm) in major surface dimension and 0.020 in. (0.51 mm) in depth. Frequency shall not exceed fourteen (14) per sq. in. Corrosion pits exceeding limits shall be reworked in accordance with step 52.3.3.4.

52.3.3.3.1 Clean surface (step 52.3.3.2)

52.3.3.3.2 Brush corrosion pits with cleaner (C-344). Allow solution to remain on surface one to three minutes.

52.3.3.3.3 Thoroughly rinse surface.

52.3.3.3.4 Dry with clean, lint-free cloths or filtered, compressed air.

52.3.3.3.5 Apply chemical film material (C-100) liberally to surface with natural fiber brush (do not use nylon). Allow to remain on surface 30 seconds to one minute.

52.3.3.3.6 Thoroughly rinse with water. The surface should be free from any powdery or loose film areas, scratches, flaws, and deflects. The rinse water will not collect into droplets within 25 seconds if surface is satisfactory. If surface is not satisfactory, repeat steps 52.3.3.3.4, 52.3.3.3.5, and 52.3.3.3.6.

52.3.3.3.7 Dry thoroughly with clean, dry cloths or with filtered, compressed air.

52.3.3.3.8 If no seal is to be applied to surface, apply epoxy/zinc coating (C-208). If seal is required, mask area where seal is to be attached and apply epoxy/zinc coating (C-208) to exposed surface.

52.3.3.4 Rework corrosion pits which exceed limitations outlined in step 52.3.3.3 as follows:

CAUTION

NOT MORE THAN 0.005 IN. (0.127 MM) OF

• COPYRIGHT © 2007 BY DART AEROSPACE LTD. •
THIS DOCUMENT IS PRIVATE AND CONFIDENTIAL AND IS SUPPLIED ON THE EXPRESS CONDITION THAT IT IS NOT TO BE USED FOR ANY PURPOSE OR COPIED OR COMMUNICATED TO ANY OTHER PERSON WITHOUT WRITTEN PERMISSION FROM DART AEROSPACE LTD.

METAL SHALL BE REMOVED.

52.3.3.4.1 Abrade corrosion pits with aluminum oxide cloth (C-406) or abrasive pad (C-407) and MEK (C-309) in any sequence to reduce pit size to acceptable limits.

52.3.3.4.2 After corrosion has been removed repeat step 52.3.3.3.

52.3.4 Cargo Hinged Panels

The hinged panel (located forward of sliding door) (Figure 52-9) provides a wider opening for cargo loading.

52.3.4.1 Removal

52.3.4.1.1 Open sliding passenger/cargo door.

52.3.4.1.2 Operate latch handle of hinged panel door to release pins from upper and lower channels of door opening. Swing door open.

52.3.4.1.3 Disengage positioning spring (2, Figure 52-9) from stud at top of opening.

52.3.4.1.4 Remove quick-release pins (1) from hinges (4). Remove door panel.

52.3.4.1.5 Remove unserviceable parts in latching mechanism as follows:

52.3.4.1.5.1 Remove screws (6) and remove cover (5).

52.3.4.1.5.2 Remove screws (23) and remove cover (22).

52.3.4.1.5.3 Remove eight screws and three nuts (10) with washers to detach escutcheon (11). Remove escutcheon and handle (13) as an assembly.

52.3.4.1.5.4 Remove cotter pin and pin (14) to detach tube (9) from spindle assembly (12). Pull tube inboard until pin (7) is free of guide in panel. Remove pin from tube and remove tube through access opening at top of panel.

52.3.4.1.5.5 Remove cotter pin and pin (14) to detach tube (15) from spindle assembly (12). Pull tube inboard until pin (16) is free of guide in panel. Remove pin from tube and remove tube through access opening at bottom of panel.

52.3.4.1.5.6 To remove striker mechanism from top or bottom of panel, remove screw (17), washer, and nut. Remove striker guide (18), shim (19), plate (20), and striker (21).

52.3.4.2 Repair or replacement

52.3.4.2.1 Replace unserviceable parts in latching mechanism (paragraph 52.3.4.3).

52.3.4.2.2 Repair door structural damage. Refer to BHT-MED-SRM-1 and to FAA Publication AC 43.13-1B, Aircraft Inspection and Repair Manual for structural maintenance.

52.3.4.2.3 Repair or replace damaged window (paragraph 52.7.6).

52.3.4.2.4 Repair or replace damaged seal(s) (paragraph 52.1.2).

52.3.4.3 Installation

52.3.4.3.1 Assemble latching mechanism as follows:

52.3.4.3.1.1 Position striker guide (18, Figure 52-9) on outside surface of panel and shim (19), plate (20), and striker (21) on inside surface of panel. Install two screws (17) with washers and nuts.

52.3.4.3.1.2 Insert tube (9) through access opening at top of hinged panel door. Install nut (8) and pin (7) on tube. Insert pin through guide at top of panel. Connect tube (9) to spindle assembly (12) using pin (14) and cotter pin.

52.3.4.3.1.3 Insert tube (15) through access opening at bottom of hinged panel door. Install

• COPYRIGHT © 2007 BY DART AEROSPACE LTD. •
THIS DOCUMENT IS PRIVATE AND CONFIDENTIAL AND IS SUPPLIED ON THE EXPRESS CONDITION THAT IT IS NOT TO BE USED FOR ANY PURPOSE OR COPIED OR COMMUNICATED TO ANY OTHER PERSON WITHOUT WRITTEN PERMISSION FROM DART AEROSPACE LTD.

pin (16) on tube. Insert pin through guide at bottom of panel. Attach tube (15) to spindle assembly (12) using pin (14) and cotter pin.

52.3.4.3.1.4 Install covers (5 and 22) after completion of operational check and adjustment.

52.3.4.3.2 Align hinged panel door on hinges and install pins.

52.3.4.3.3 Swing hinged panel door partly closed and engage the slotted positioning spring (2) on stud at top of door opening.

52.3.4.3.4 Close hinged panel door and operate handle to extend latch pins into holes in upper and lower structural channels of frame.

52.3.4.3.5 Close sliding door to check for proper latching.

52.3.4.3.6 Adjust hinged panel door as follows:

52.3.4.3.6.1 With hinged panel door closed and latched, verify upper and lower pins (7 and 16) are securely engaged in channels of opening. Verify pin on lower inside of panel is engaged in door post.

52.3.4.3.6.2 Operate handle (13) to open panel. Verify upper and lower pins retract to clear top and bottom of door opening.

52.3.4.3.6.3 If necessary to adjust either pin (7 or 16), remove cover (5 or 22) for access. Loosen nut (8), adjust pins to obtain secure engagement and proper release. Tighten nut (8) against pin (7). Install covers after adjustment.

52.3.4.3.6.4 Check action of positioning spring (2) on pivot (3) as panel is opened. Detent in spring slot should catch and hold panel at approximately 90° to fuselage. Hook of spring should catch when panel is forced beyond detent.

52.3.4.3.6.5 With panel closed and latched, slowly close passenger/cargo door. Check for proper engagement of latches on passenger/ cargo door with striker (21). When adjustment is necessary, remove cover over striker. Adjust striker position by means of slotted mounting holes, or adjust thickness of laminated shim (19). Reinstall cover with mounting screws, washers, and nuts when adjustment is complete.

• COPYRIGHT © 2007 BY DART AEROSPACE LTD. •
THIS DOCUMENT IS PRIVATE AND CONFIDENTIAL AND IS SUPPLIED ON THE EXPRESS CONDITION THAT IT IS NOT TO BE USED FOR ANY PURPOSE OR COPIED OR COMMUNICATED TO ANY OTHER PERSON WITHOUT WRITTEN PERMISSION FROM DART AEROSPACE LTD.

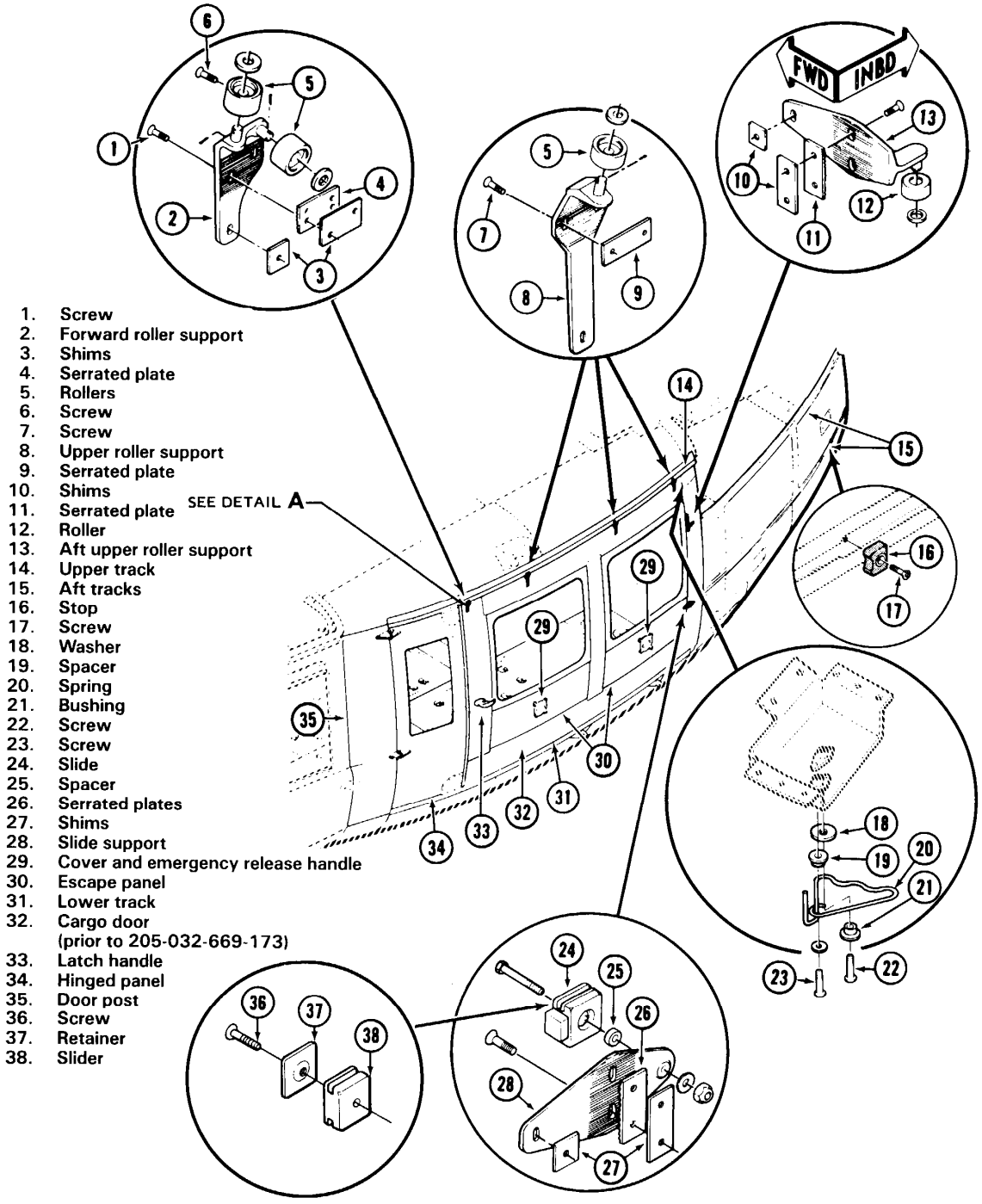

1. Screw
2. Forward roller support
3. Shims
4. Serrated plate
5. Rollers
6. Screw
7. Screw
8. Upper roller support
9. Serrated plate
10. Shims
11. Serrated plate
12. Roller
13. Aft upper roller support
14. Upper track
15. Aft tracks
16. Stop
17. Screw
18. Washer
19. Spacer
20. Spring
21. Bushing
22. Screw
23. Screw
24. Slide
25. Spacer
26. Serrated plates
27. Shims
28. Slide support
29. Cover and emergency release handle
30. Escape panel
31. Lower track
32. Cargo door
    (prior to 205-032-669-173)
33. Latch handle
34. Hinged panel
35. Door post
36. Screw
37. Retainer
38. Slider

Figure 52-7. Passenger/Cargo Door (Sheet 1 of 2)

• COPYRIGHT © 2007 BY DART AEROSPACE LTD. •
THIS DOCUMENT IS PRIVATE AND CONFIDENTIAL AND IS SUPPLIED ON THE EXPRESS CONDITION THAT IT IS NOT TO BE USED FOR ANY PURPOSE OR COPIED OR COMMUNICATED TO ANY OTHER PERSON WITHOUT WRITTEN PERMISSION FROM DART AEROSPACE LTD.

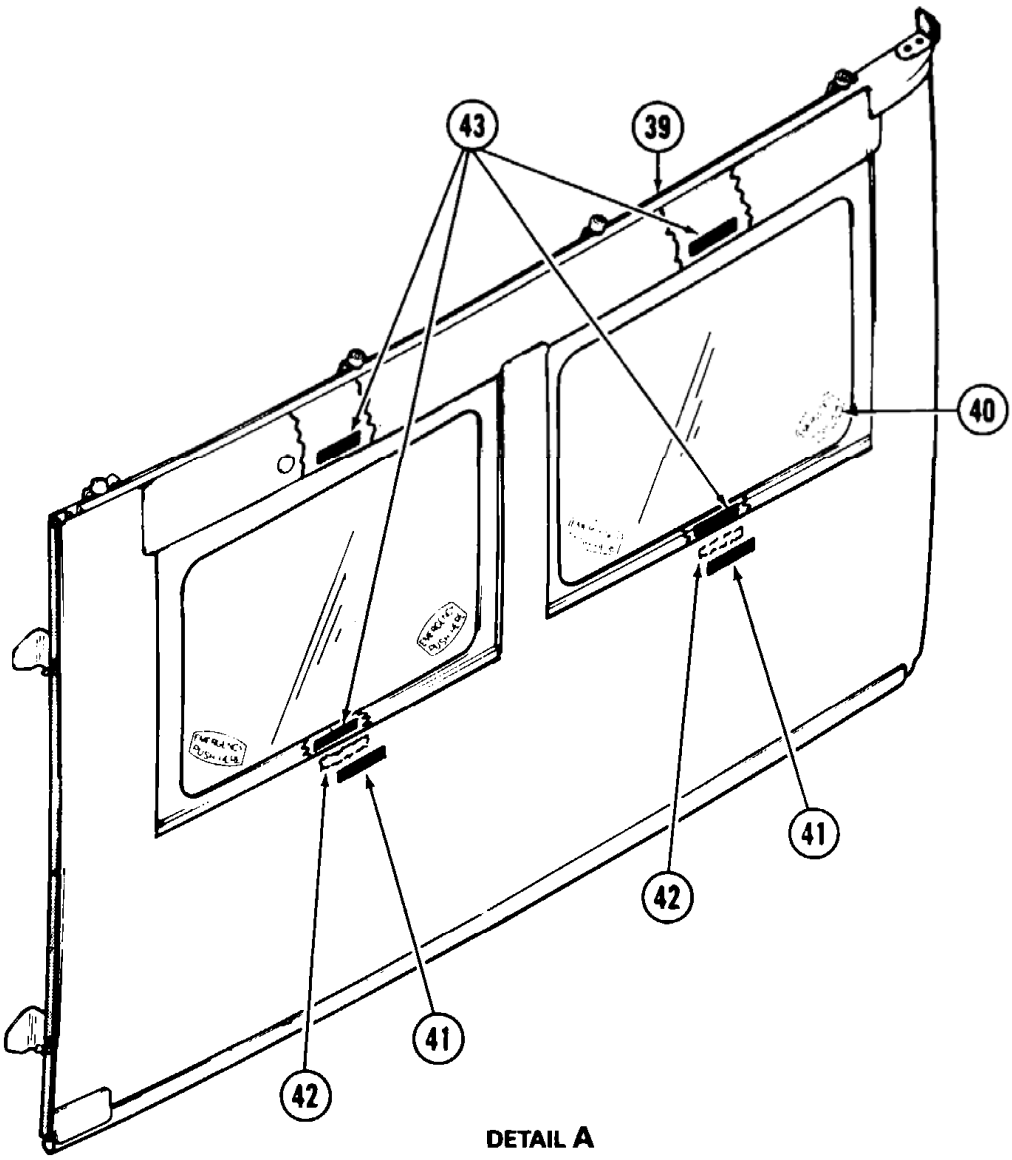

DETAIL A

39. Cargo door (205-032-669-173 and subsequent)
40. Decal — emergency push here
41. Decal — Emergency push (outside)
42. Sign — emergency push (inside)
43. Decal — emergency exit

Figure 52-7. Passenger/Cargo Door (Sheet 2 of 2)

• COPYRIGHT © 2007 BY DART AEROSPACE LTD. •
THIS DOCUMENT IS PRIVATE AND CONFIDENTIAL AND IS SUPPLIED ON THE EXPRESS CONDITION THAT IT IS NOT TO BE USED FOR ANY PURPOSE OR COPIED OR COMMUNICATED TO ANY OTHER PERSON WITHOUT WRITTEN PERMISSION FROM DART AEROSPACE LTD.

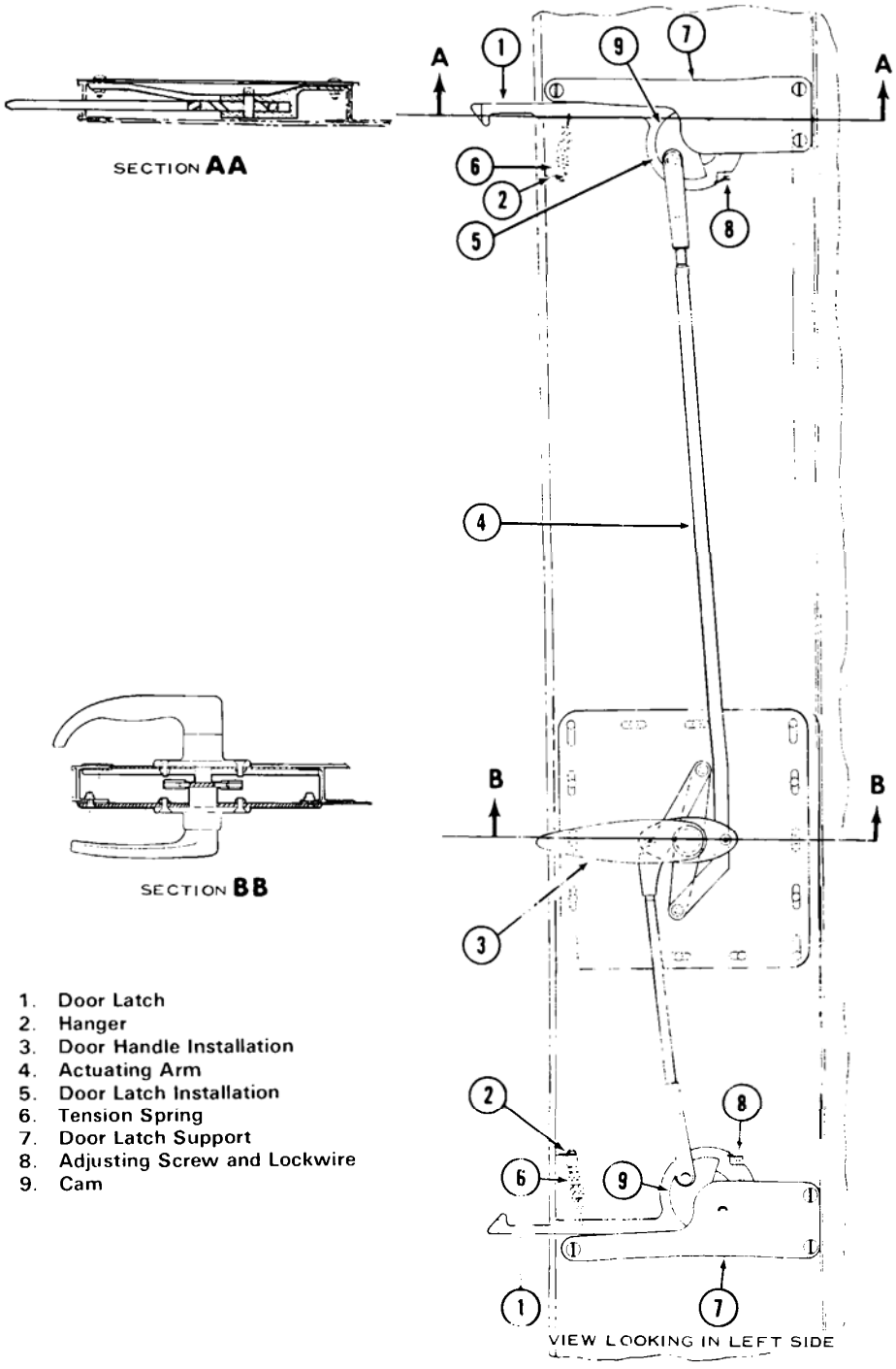

Figure 52-8. Passenger/Cargo Door Latch (Typical)

• COPYRIGHT © 2007 BY DART AEROSPACE LTD. •
THIS DOCUMENT IS PRIVATE AND CONFIDENTIAL AND IS SUPPLIED ON THE EXPRESS CONDITION THAT IT IS NOT TO BE USED FOR ANY PURPOSE OR COPIED OR COMMUNICATED TO ANY OTHER PERSON WITHOUT WRITTEN PERMISSION FROM DART AEROSPACE LTD.

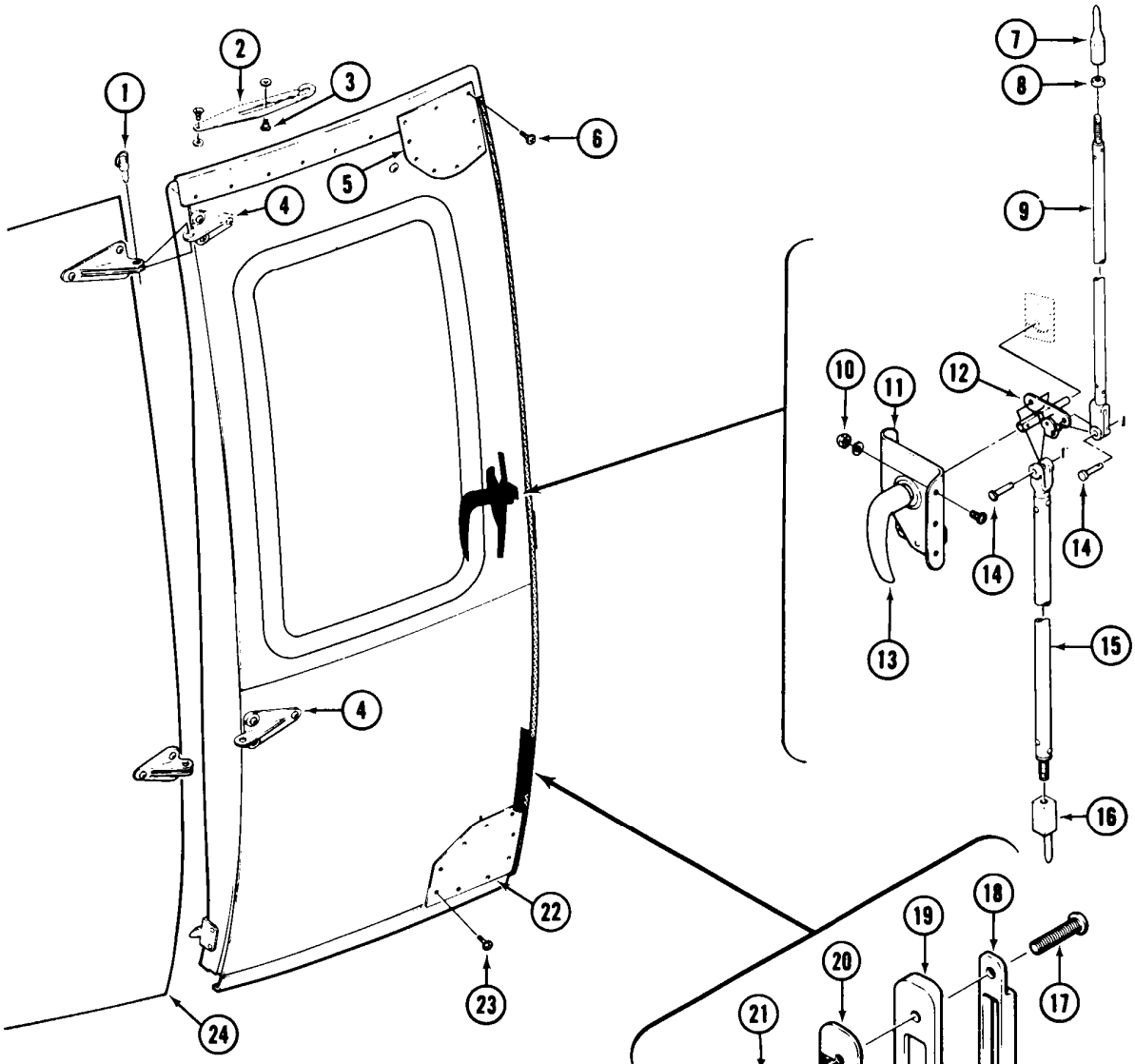

Figure 52-9. Cargo Hinged Panel Door

• COPYRIGHT © 2007 BY DART AEROSPACE LTD. •
THIS DOCUMENT IS PRIVATE AND CONFIDENTIAL AND IS SUPPLIED ON THE EXPRESS CONDITION THAT IT IS NOT TO BE USED FOR ANY PURPOSE OR COPIED OR COMMUNICATED TO ANY OTHER PERSON WITHOUT WRITTEN PERMISSION FROM DART AEROSPACE LTD.

52.4 CARGO COMPARTMENT DOOR

The cargo compartment door is located on the forward right side of the tail boom. The door is hinged on the forward end and has a latch and lock on the aft end. The door is a honeycomb panel with both faces of aluminum alloy.

52.4.1 Removal

52.4.1.1 Open cargo compartment door.

52.4.1.2 Disconnect chain from cargo compartment door.

52.4.1.3 Remove nuts, washers, and bolts from hinges. Remove cargo compartment door.

52.4.2 Inspection

52.4.2.1 Inspect chain for security and condition.

52.4.2.2 Inspect hinge for cracks and distortion.

52.4.2.3 Inspect latch for proper operation and security.

52.4.2.4 Inspect switch for operation of baggage compartment light and caution panel segment DOOR LOCK when baggage compartment door is opened.

52.4.3 Repair

52.4.3.1 Replace unserviceable parts in latch mechanism.

52.4.3.2 Repair door structural damage. Refer to BHT-MED-SRM-1 and to FAA Publication AC 43.13-1B, Aircraft Inspection and Repair Manual for repair of honeycomb panels.

52.4.3.3 Replace damaged seals (paragraph 52.1.2).

52.4.4 Installation

52.4.4.1 Position baggage door over hinges on tailboom.

52.4.4.2 Install bolts, washers, and nuts. Install cotter pins.

52.4.4.3 Connect chain to door.

52.4.4.4 Check operation of door lock caution switch (Chapter 96).

52.5 ACCESS COVERS AND DOORS

The following paragraphs provide maintenance information for the hinged upper and lower nose doors, electrical equipment access door, miscellaneous access covers and doors, and tail rotor driveshaft access covers.

52.5.1 Nose Access Doors

Two hinged doors give access to nose compartment. The lower door is of aluminum alloy construction and swings down after removal of attaching studs, and raising upper door. The upper door is of fiberglass faced honeycomb construction and swings up after release of manually activated latches or removal of attaching studs.

52.5.1.1 Removal

52.5.1.1.1 Remove attaching studs from lower door and open door. Disconnect hinge assemblies from fittings on structure and remove door assembly.

52.5.1.1.2 Remove upper door by removing screws which attach top of door to hinges and releasing latches.

• COPYRIGHT © 2007 BY DART AEROSPACE LTD. •
THIS DOCUMENT IS PRIVATE AND CONFIDENTIAL AND IS SUPPLIED ON THE EXPRESS CONDITION THAT IT IS NOT TO BE USED FOR ANY PURPOSE OR COPIED OR COMMUNICATED TO ANY OTHER PERSON WITHOUT WRITTEN PERMISSION FROM DART AEROSPACE LTD.

52.5.1.2 Inspection

52.5.1.2.1 Inspect hinges for cracks and distortion.

52.5.1.2.2 Inspect latches for operation and security.

52.5.1.2.3 Inspect door for structural damage.

52.5.1.2.4 Inspect seal for secure bonding and for deterioration.

52.5.1.3 Repair

52.5.1.3.1 Replace unserviceable parts in nose access doors.

52.5.1.3.2 Repair door structural damage. Refer to BHT-MED-SRM-1 and FAA Publication AC 43.13-1B, Aircraft Inspection and Repair Manual

52.5.1.3.3 Replace damaged seals (paragraph 52.1.2).

52.5.1.4 Installation

52.5.1.4.1 Position upper door to structure and align attachment holes at top of door with holes in hinges.

52.5.1.4.2 Install screws and engage latches or install attaching studs.

52.5.1.4.3 Install lower door hinges to fittings on structure.

52.5.1.4.4 Close door and install attaching studs.

52.5.2 Electrical and Equipment Compartment Access Doors

Access to forward fuselage section compartments, other than the crew area, is obtained by use of hinged doors.

52.5.2.1 Removal

52.5.2.1.1 Release spring loaded latches and hold door open.

52.5.2.1.2 Remove hinge pins attaching doors to structure and remove door.

52.5.2.2 Inspection and repair

Inspect and repair electrical compartment access door in accordance with procedures in paragraphs 52.5.1.2 and 52.5.1.3.

52.5.2.3 Installation

52.5.2.3.1 Position door in opening and insert attaching hinge pin.

52.5.2.3.2 Close door firmly, forcing spring loaded latch to lock.

52.5.3 Miscellaneous Access Doors

Doors and panels are provided at various locations on the fuselage for access to interior areas. Three types of construction are used: Honeycomb with sheet metal and fiberglass faces; honeycomb with both faces of fiberglass; and contoured flat sheet metal. Screws or twist type fasteners retain doors in place.

52.5.3.1 Removal

Remove screws or disengage fasteners, as applicable, and remove door, panel, or fairing.

52.5.3.2 Inspection and repair

Inspect and repair electrical compartment access door in accordance with procedures in paragraphs 52.5.1.2 and 52.5.1.3.

• COPYRIGHT © 2007 BY DART AEROSPACE LTD. •
THIS DOCUMENT IS PRIVATE AND CONFIDENTIAL AND IS SUPPLIED ON THE EXPRESS CONDITION THAT IT IS NOT TO BE USED FOR ANY PURPOSE OR COPIED OR COMMUNICATED TO ANY OTHER PERSON WITHOUT WRITTEN PERMISSION FROM DART AEROSPACE LTD.

52.5.3.3 Installation

Position door, panel, or fairing on helicopter and fasten twist-type fastener or install screws, as applicable

52.6 TAIL ROTOR DRIVESHAFT ACCESS COVERS

The tail rotor driveshaft access cover installation consists of three formed aluminum alloy parts. Each cover is hinged on the right side and is secured on left side by twist-type studs through support angles atop the tailboom.

52.6.1 Removal

52.6.1.1 Loosen stud (1, Figure 52-10) in two places. Hinge open cover (4).

52.6.1.2 Loosen studs (10) and hinge open covers (6 and 9).

52.6.1.3 Remove cotter pin (3) and hinge pin (2). Remove covers (4 and 6).

52.6.1.4 Remove cotter pin (7), hinge pin (8), and cover (9).

52.6.2 Inspection

52.6.2.1 Inspect covers (4, 6, and 9 Figure 52-10) for missing, damaged, or loose studs.

52.6.2.2 Inspect covers for corrosion and mechanical damage.

52.6.2.3 Inspect support angles on left side for missing, damaged, or loose grommets.

52.6.2.4 Inspect support angles on right side for corrosion and mechanical damage.

52.6.3 Repair

Repair corrosion and mechanical damage. Refer to BHT-MED-SRM-1 and FAA publication, AC 43.13-1B, Aircraft Inspection and Repair Manual for structural repair.

52.6.4 Installation

52.6.4.1 Install aft cover (9, Figure 52-10) with hinge pin (8) and secure with cotter pin (7).

52.6.4.2 Align forward cover (6) with hinge half. Align forward cover (4) with hinge half.

52.6.4.3 Install hinge pin (2) forward to aft, through cover (4) then cover (6). Secure with cotter, pin (3).

52.6.4.4 Close cover (4) and fasten studs (1). Close covers (6 and 9) and latch studs (10).

• COPYRIGHT © 2007 BY DART AEROSPACE LTD. •
THIS DOCUMENT IS PRIVATE AND CONFIDENTIAL AND IS SUPPLIED ON THE EXPRESS CONDITION THAT IT IS NOT TO BE USED FOR ANY PURPOSE OR COPIED OR COMMUNICATED TO ANY OTHER PERSON WITHOUT WRITTEN PERMISSION FROM DART AEROSPACE LTD.

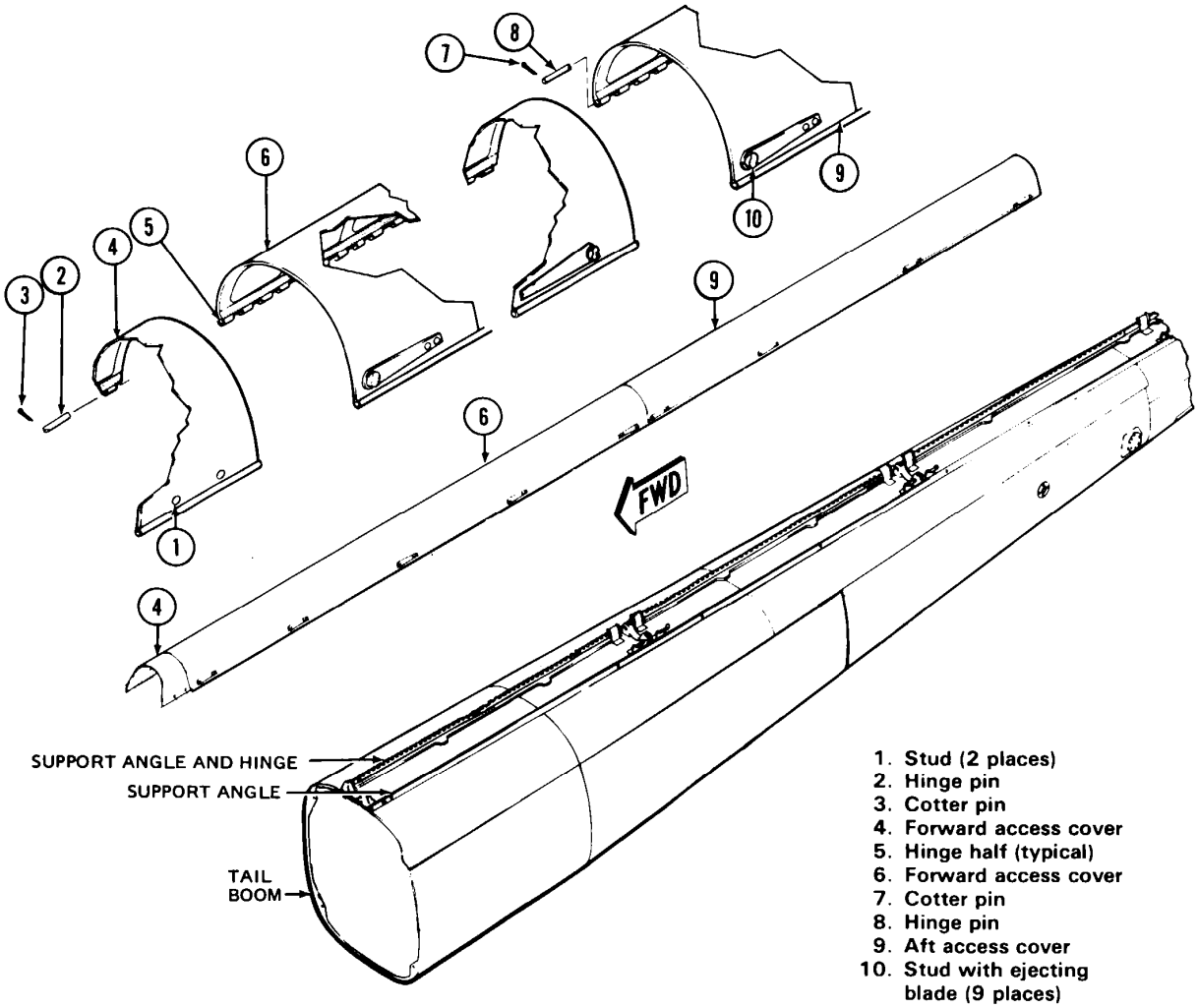

Figure 52-10. Tailboom Driveshaft Access Covers

• COPYRIGHT © 2007 BY DART AEROSPACE LTD. •
THIS DOCUMENT IS PRIVATE AND CONFIDENTIAL AND IS SUPPLIED ON THE EXPRESS CONDITION THAT IT IS NOT TO BE USED FOR ANY PURPOSE OR COPIED OR COMMUNICATED TO ANY OTHER PERSON WITHOUT WRITTEN PERMISSION FROM DART AEROSPACE LTD.

52.7 WINDOWS AND WINDSHIELDS

The following paragraphs provide maintenance instructions for the pilot and copilot windshields, cabin and nose section windows (upper and lower), crew door windows, passenger/cargo door windows, and hinged panel windows.

52.7.1 Windshields

The helicopter is equipped with either acrylic or a sandwich-type construction windshield. In the sandwich-type of windshield, the outer layer is made of tempered glass, the middle layer of pliable, laminated glass, and the inner layer of either glass or plastic. Glass laminated windshields may be identified by 212-030-464 located at the top outboard corner, readable from inside. Glass windshields may be used as a replacement on all helicopters. The windshields are set in weather-tight sealer and are mounted to the cabin structure with screws, washers, and nuts.

52.7.1.1 Removal

52.7.1.1.1 Remove free air temperature gauge (pilot windshield only), if installed (Chapter 95).

52.7.1.1.2 Mark location of wiper stop (approximately BL 7.0. Remove windshield wiper arm and blade (Chapter 30).

52.7.1.1.3 Noting location of hardware, remove nuts, washers and screws attaching windshield to fuselage.

NOTE

Shims may have been installed to reduce any gaps between windshield frame and mounting flange. If same windshield is to be re-installed, mark location of any shims installed.

52.7.1.1.4 Separate windshield from sealing compound using a non-metallic spatula, putty knife, or other suitable tool (e.g., Snap-on P/N YA109C).

52.7.1.1.5 Carefully remove windshield from helicopter.

52.7.1.2 Cleaning

MATERIALS REQUIRED

NUMBER	NOMENCLATURE
C-330	Cleaner

52.7.1.2.1 Wash windshields with a mild detergent and water solution. Dry with a soft clean cloth.

52.7.1.2.2 Polish acrylic windshields with cleaner (C-330).

52.7.1.3 Inspection and repair

52.7.1.3.1 Small scratches and minor abrasions on acrylic panels may be considered negligible provided pilot vision is not impaired or signs of developing cracks are not evident. Minor scratches, nicks, and non-puncturing dents in frame assemblies may be considered negligible provided such damage does not affect transparent panels.

52.7.1.3.2 Tears, holes, and cracks in acrylic panels less than 4.0 in. (101.60 mm) in length can be repaired provided damage nor repair will not interfere with pilot vision.

52.7.1.3.3 Inspect windshields and windows to damage limits shown in Figure 52-12.

52.7.1.3.4 Refer to FAA Advisory Circular 43.13-1B, Aircraft Inspection and Repair, for repair instructions and procedures for acrylic. No repairs are authorized for glass windshields. Glass windshields shall be replaced if cracked, or if vision is impaired or distorted by scratches.

• COPYRIGHT © 2007 BY DART AEROSPACE LTD. •
THIS DOCUMENT IS PRIVATE AND CONFIDENTIAL AND IS SUPPLIED ON THE EXPRESS CONDITION THAT IT IS NOT TO BE USED FOR ANY PURPOSE OR COPIED OR COMMUNICATED TO ANY OTHER PERSON WITHOUT WRITTEN PERMISSION FROM DART AEROSPACE LTD.

52.7.1.4 Installation

MATERIALS REQUIRED

NUMBER	NOMENCLATURE
C-305	Aliphatic Naphtha
C-328	Adhesive

52.7.1.4.1 Remove all sealing compound from mounting flange with putty knife, spatula, or other similar tool.

CAUTION

WHEN CLEANING WINDOWS, USE ONLY TYPE II ALIPHATIC NAPHTHA (C-305). ALIPHATHA NAPHTHA TYPE I WILL CLOUD WINDOWS

52.7.1.4.2 Wipe and clean mounting flange with a cloth dampened with aliphatic naphtha (C-305).

52.7.1.4.3 Position windshield in mounting position so that it mates with the contour and that no portion of the bevel edge on the inside surface contacts the frame (minimum 0.010 inch (0.25 mm) clearance)..

NOTE

Do not trim windshield to final size until all mounting holes have been drilled.

52.7.1.4.4 Trim windshield only as required to allow temporary installation. Temporarily secure with heavy tape.

52.7.1.4.5 Mark the location of all screw holes on the windshield flange.

52.7.1.4.6 Remove windshield and confirm minimum edge distance of 0.38 inch (9.65 mm) for all holes. Readjust position as required to obtain proper edge distance.

52.7.1.4.7 Position windshield in place with all marked holes aligned.

52.7.1.4.8 Starting at the center of the vertical row (center post) and progressing towards the top and bottom, transfer the screw holes into the windshield flange using a 0.190 to 0.196 inch (4.82 to 4.97 mm) drill. Temporarily attach with clecos.

52.7.1.4.9 Transfer remaining screw holes starting at the inboard corners, progressing towards the outboard edge. Temporarily attach with clecos.

NOTE

If a gap greater than 0.015 inch (0.381 mm) exists due to variations in windshield contour or mounting flange, a shim may be installed.

52.7.1.4.10 Check for excessive gap between windshield frame and mounting flange over a distance of three screw holes. If gap is greater than 0.015 inch (0.381 mm), install shim material as follows:

52.7.1.4.10.1 Prepare shim material from aluminum alloy 2024 T3 with a maximum thickness of 0.063 inch (1.6002 mm) to reduce any gaps to a maximum of 0.015 inch (0.381 mm).

52.7.1.4.10.2 Install shim between windshield frame and mounting flange. Shim material must be secured with a minimum of two fasteners.

52.7.1.4.10.3 Mark location of shim for proper installation in later steps.

52.7.1.4.11 Using a No. 4 drill, backdrill two holes on each edge of windshield. Use holes in mounting flange as a template.

52.7.1.4.12 Secure windshield to mounting flange with four screws, washers and nuts. Lightly tighten. Finish drilling holes in windshield.

52.7.1.4.13 Confirm proper edge distance, mark windshield and shims (if required) and remove. Trim windshield edge and shims (if required) to proper size.

52.7.1.4.14 Remove all dust and foreign matter from windshield mating area and from windshield mounting flange.

• COPYRIGHT © 2007 BY DART AEROSPACE LTD. •
THIS DOCUMENT IS PRIVATE AND CONFIDENTIAL AND IS SUPPLIED ON THE EXPRESS CONDITION THAT IT IS NOT TO BE USED FOR ANY PURPOSE OR COPIED OR COMMUNICATED TO ANY OTHER PERSON WITHOUT WRITTEN PERMISSION FROM DART AEROSPACE LTD.

52.7.1.4.15 Apply a small even bead of sealant (C-328) to window frame.

52.7.1.4.16 Position windshield, align holes and install shims (if required), screws, washers and nuts.

52.7.1.4.17 Increase torque slowly and evenly on all screws or nuts to a maximum of 23 in-lbs (0.16 Nm). Verify torque before sealant dries.

52.7.1.4.18 Remove excess sealant (C-328) from around windshield with aliphatic naphtha (C-305). Touch up paint if bare metal is evident.

52.7.1.4.19 Install windshield wiper assemblies and free air temperature gauge (if installed) (Chapter 30 and 95).

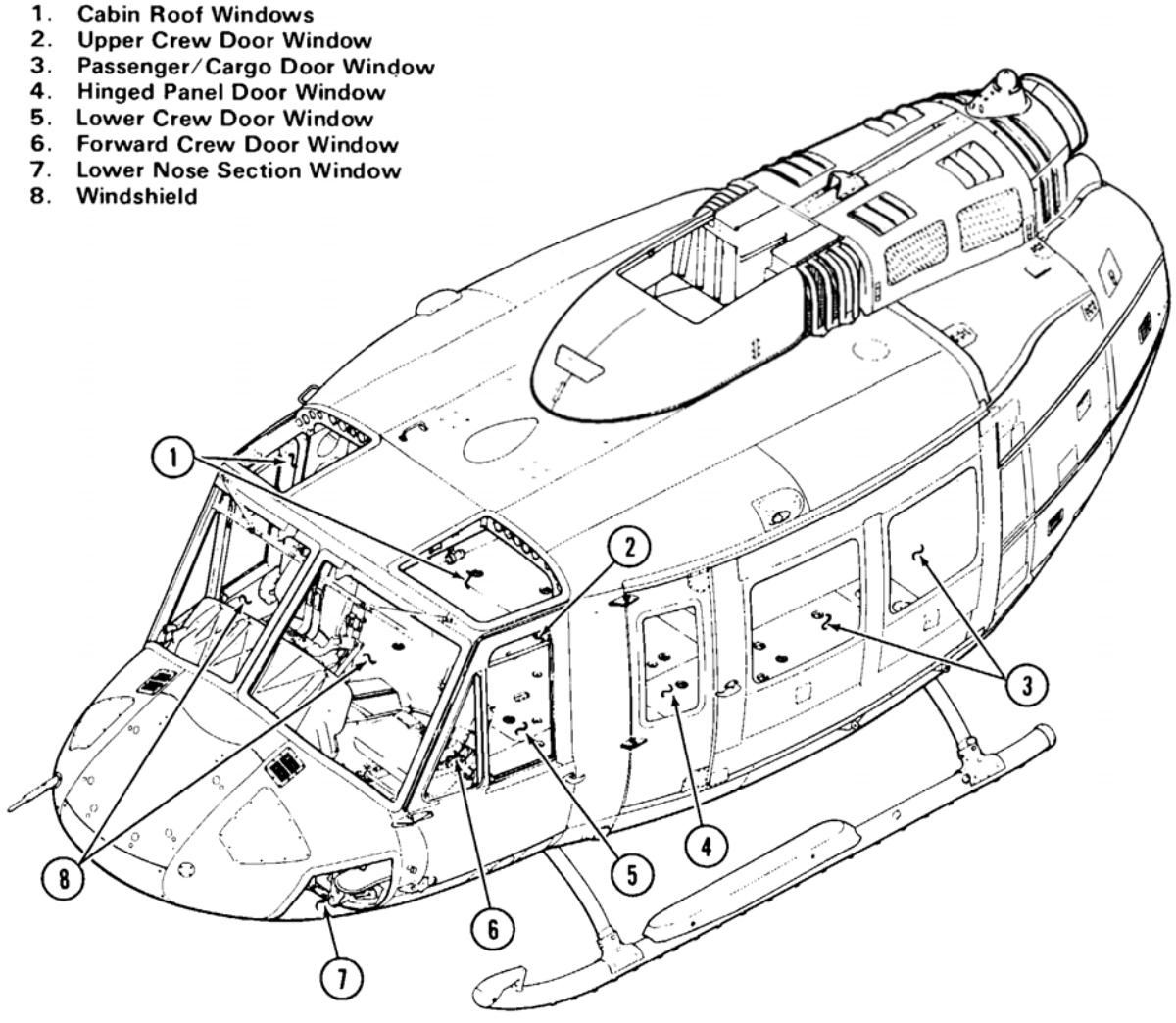

Figure 52-11. Windows and Windshields

• COPYRIGHT © 2007 BY DART AEROSPACE LTD. •
THIS DOCUMENT IS PRIVATE AND CONFIDENTIAL AND IS SUPPLIED ON THE EXPRESS CONDITION THAT IT IS NOT TO BE USED FOR ANY PURPOSE OR COPIED OR COMMUNICATED TO ANY OTHER PERSON WITHOUT WRITTEN PERMISSION FROM DART AEROSPACE LTD.

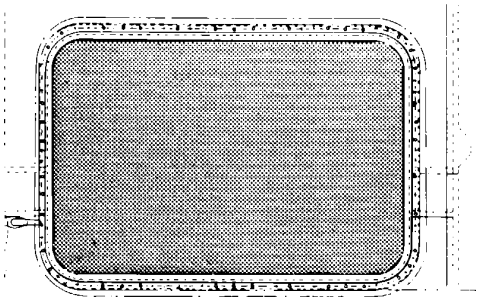

PASSENGER DOOR WINDOWS

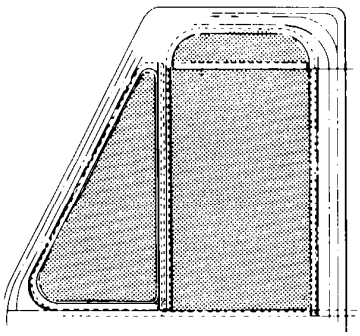

PILOT AND COPILOT DOOR WINDOWS

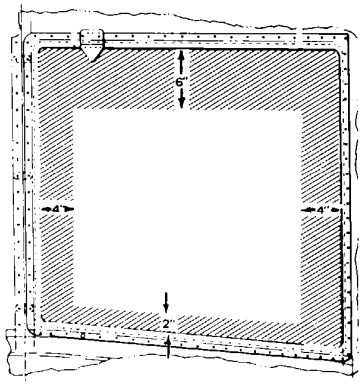

WINDSHIELDS

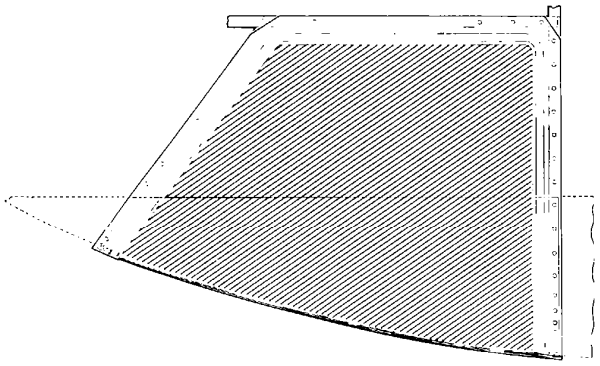

LOWER CABIN NOSE WINDOWS

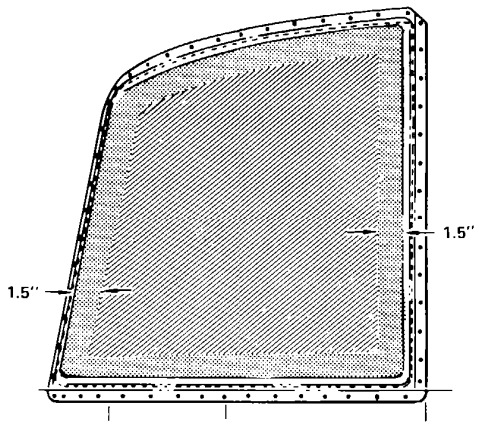

CABIN ROOF WINDOWS

Area "A":

Scratches and pits may polished out to the extent that vision is not distorted. Distortion of vision is cause for replacement. Cracks, holes or other damage may be temporarily repaired, if vision of crew members will not be impaired by stop drilling, patching or other approved methods (refer to FAA Advisory Circular 43.13-1B. Aircraft Inspection and Repair), but window must be replaced at the earliest opportunity.

Area "B":

Scratches and pits are permitted in this area provided they are not so numerous or form such a pattern as to be objectionable to the viewer. Cracks, holes or other damage may be temporarily repaired by stop drilling, patching or other approved methods (refer to FAA Advisory Circular 43.13-1B. Aircraft Inspection and Repair), but window must be replaced at the earliest opportunity.

Area "C":

Scratches and pits are permitted in this area providing the structural integrity of the window is not impaired. Cracks, holes or other damage may be repaired by stop drilling, patching or other approved methods provided structural integrity is not impaired (refer to FAA Advisory Circular 43.13-1B. Aircraft Inspection and Repair.)

Figure 52-12. Windshield and Window Damage Limits

• COPYRIGHT © 2007 BY DART AEROSPACE LTD. •
THIS DOCUMENT IS PRIVATE AND CONFIDENTIAL AND IS SUPPLIED ON THE EXPRESS CONDITION THAT IT IS NOT TO BE USED FOR ANY PURPOSE OR COPIED OR COMMUNICATED TO ANY OTHER PERSON WITHOUT WRITTEN PERMISSION FROM DART AEROSPACE LTD.

52.7.2 Cabin Roof Windows

The cabin roof windows (Figure 52-11) are made of tinted acrylic.

52.7.2.1 Removal

52.7.2.1.1 Remove free air temperature gage (Chapter 95), if installed.

52.7.2.1.2 Remove nuts, washers, and screws attaching windows (1, Figure 52-11) to roof structure.

52.7.2.1.3 Separate window from sealant using a spatula, putty knife, or similar tool.

52.7.2.1.4 Carefully remove window from helicopter.

52.7.2.2 Inspection and repair

52.7.2.2.1 Inspect windows to damage limits shown in Figure 52-12.

52.7.2.2.2 Refer to FAA Publication AC 43.13-1B, Aircraft Inspection and Repair, for repair methods.

52.7.2.3 Installation

MATERIALS REQUIRED

NUMBER	NOMENCLATURE
C-305	Aliphatic Naphtha
0-308	Adhesive

52.7.2.3.1 Prior to installation of cabin roof windows (1, Figure 52-11), wash windows with a mild detergent and water solution. Dry with a soft, lint-free, dry cloth.

52.7.2.3.2 Remove old sealing compound from mounting flange with putty knife, spatula, or other suitable tool.

CAUTION

WHEN CLEANING WINDOWS AND MOUNTING FLANGE, USE ONLY ALIPHATIC NAPHTHA, TYPE II (C-305). DO NOT USE ALIPHATIC NAPHTHA, TYPE I AS IT WILL CLOUD WINDOWS.

52.7.2.3.3 Wipe and clean mounting flange with cloth dampened in aliphatic naphtha (C-305).

52.7.2.3.4 If a new window is being installed, position window over opening. Trim only enough surplus material from edge of window to permit proper alignment of window against mounting flange.

NOTE

Do not trim window to final size until all mounting holes have been drilled.

52.7.2.3.5 Position window against mounting flange and, using a 0.208 to 0.214 in. drill (No. 4), back drill two holes on each edge of window. Use holes in mounting flange as template.

52.7.2.3.6 Secure window to mounting flange with four dural screws, washers, and nuts, lightly tighten. Drill remainder of holes in window.

52.7.2.3.7 Measure window and mark proper edge distance required for installation. Remove window and trim window edge to 0.80 in. (20.32 mm).

CAUTION

WHEN CLEANING WINDOWS, USE ONLY ALIPHATIC NAPHTHA, TYPE II (C-305). DO NOT USE ALIPHATIC NAPHTHA, TYPE I AS IT WILL CLOUD WINDOWS.

52.7.2.3.8 Remove all dust and dirt from windows and mounting flange with a clean cloth moistened in aliphatic naphtha (C-305).

• COPYRIGHT © 2007 BY DART AEROSPACE LTD. •
THIS DOCUMENT IS PRIVATE AND CONFIDENTIAL AND IS SUPPLIED ON THE EXPRESS CONDITION THAT IT IS NOT TO BE USED FOR ANY PURPOSE OR COPIED OR COMMUNICATED TO ANY OTHER PERSON WITHOUT WRITTEN PERMISSION FROM DART AEROSPACE LTD.

52.7.2.3.9 Apply a 0.125 in. (3.18 mm) wide bead of adhesive (C-308).

52.7.2.3.10 Position window to mounting flange, align holes, and install screws, washers, and nuts.

CAUTION

WHEN CLEANING WINDOWS AND MOUNTING FLANGE, USE ONLY ALIPHATIC NAPHTHA TYPE II. DO NOT USE ALIPHATIC NAPHTHA. TYPE I AS IT WILL CLOUD WINDOWS.

52.7.2.3.11 Remove excess sealant from around window with a clean cloth moistened in aliphatic naphtha (C-305).

52.7.2.3.12 Install free air temperature gage, as required (Chapter 95).

• COPYRIGHT © 2007 BY DART AEROSPACE LTD. •
THIS DOCUMENT IS PRIVATE AND CONFIDENTIAL AND IS SUPPLIED ON THE EXPRESS CONDITION THAT IT IS NOT TO BE USED FOR ANY PURPOSE OR COPIED OR COMMUNICATED TO ANY OTHER PERSON WITHOUT WRITTEN PERMISSION FROM DART AEROSPACE LTD.

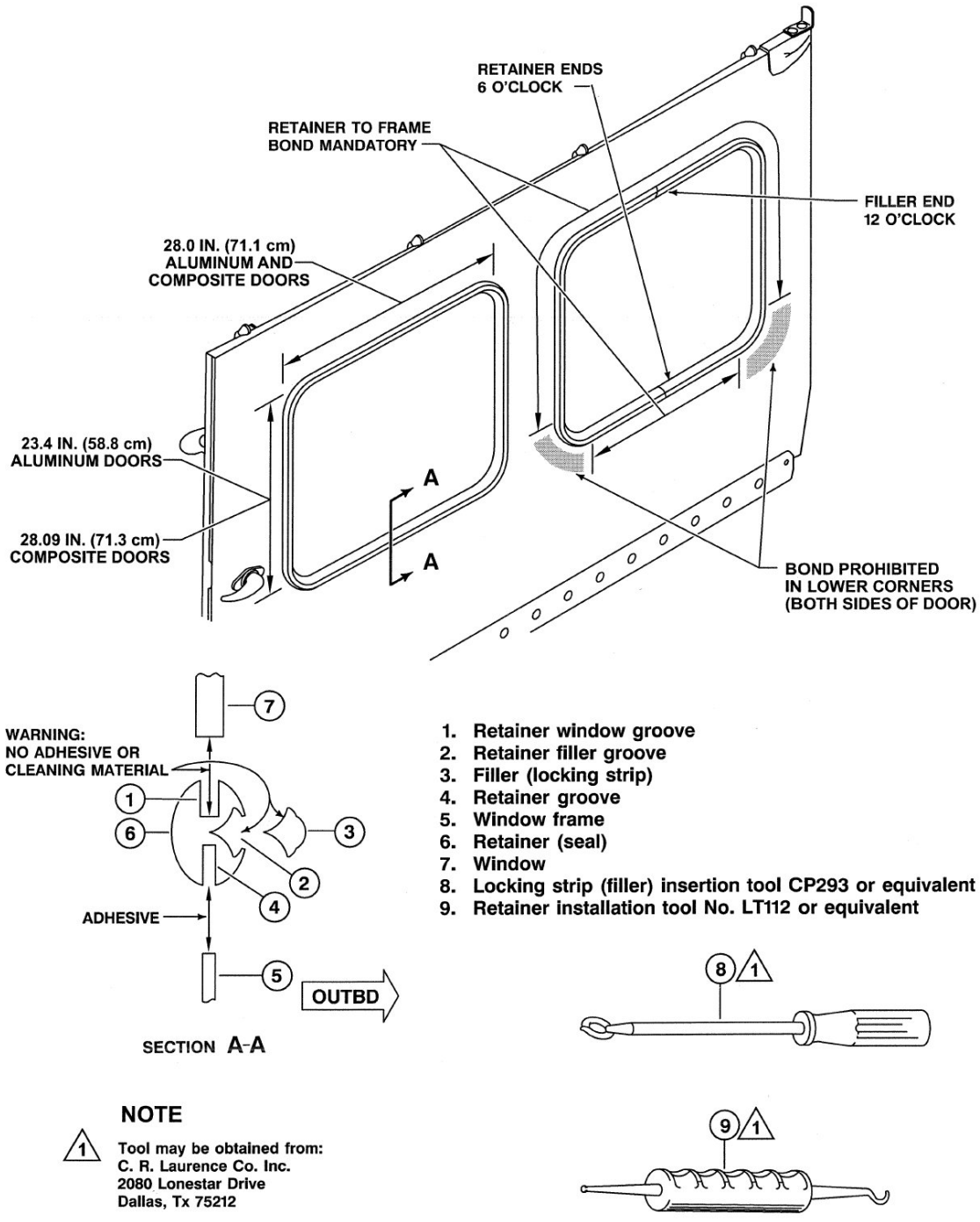

Figure 52-13. Passenger/Cargo Door Windows (Doors Equipped with Push-out Style Windows)

• COPYRIGHT © 2007 BY DART AEROSPACE LTD. •
THIS DOCUMENT IS PRIVATE AND CONFIDENTIAL AND IS SUPPLIED ON THE EXPRESS CONDITION THAT IT IS NOT TO BE USED FOR ANY PURPOSE OR COPIED OR COMMUNICATED TO ANY OTHER PERSON WITHOUT WRITTEN PERMISSION FROM DART AEROSPACE LTD.

52.7.3 Lower Nose Section Windows

The lower nose windows (Figure 52-11) are made of clear acrylic.

52.7.3.1 Removal

52.7.3.1.1 Remove nuts, washers, and screws attaching windows (7, Figure 52-11) to roof structure.

52.7.3.1.2 Separate window from sealant and remove window from helicopter.

52.7.3.2 Inspection and repair

52.7.3.2.1 Inspect windows to damage limits shown in Figure 52-12.

52.7.3.2.2 Refer to FAA Publication AC 43.13-1B, Aircraft Inspection and Repair, for repair methods.

52.7.3.3 Installation

MATERIALS REQUIRED

NUMBER	NOMENCLATURE
C-305	Aliphatic Naphtha
C-308	Adhesive

52.7.3.3.1 Prior to installation of lower nose section windows (7, Figure 52-11), wash windows with a mild detergent and water solution. Dry with a soft dry cloth.

52.7.3.3.2 Remove old sealant from mounting flange with putty knife, spatula, or other suitable tool.

CAUTION

WHEN CLEANING WINDOWS AND FLANGES, USE ONLY ALIPHATIC NAPHTHA, TYPE II (C-305). DO NOT USE ALIPHATIC NAPHTHA, TYPE I, AS IT WILL CLOUD WINDOWS.

52.7.3.3.3 Wipe and clean mounting flange with a cloth moistened in aliphatic naphtha (C-305). If an old window is being installed, clean edges of window using naphtha.

52.7.3.3.4 Position a new window over opening. Trim surplus edge to permit window to be in mounting position against flange.

NOTE

Do not trim window to final size until all mounting holes have been drilled.

52.7.3.3.5 Position window against mounting flange and using a 0.208 to 0.214 in. (No.4) diameter drill, back drill two holes in edge of each window.

52.7.3.3.6 Secure window to mounting flange with four dural screws, washers, and nuts. Lightly tighten screws. Finish drilling holes in window.

52.7.3.3.7 Determine proper edge distance and mark window. Remove window and trim to 1.04 in. (26.42 mm) edge distance.

CAUTION

WHEN CLEANING WINDOWS, USE ONLY ALIPHATIC NAPHTHA, TYPE II (C-305). DO NOT USE ALIPHATIC NAPHTHA, TYPE I, AS IT WILL CLOUD WINDOWS.

52.7.3.3.8 Remove all dust and foreign matter from window mating area and from window mounting flange using aliphatic naphtha (C-305).

52.7.3.3.9 Apply a 0.125 in. (3.18 mm) wide bead of adhesive (C-308) around window.

52.7.3.3.10 Position window in mounting flange, align holes, and install screws, washers, and nuts.

52.7.3.3.11 Remove excess sealant from around window.

52.7.4 Crew Door Windows

Three separate windows are installed in each crew door (Figure 52-11); a forward window, a

• COPYRIGHT © 2007 BY DART AEROSPACE LTD. •
THIS DOCUMENT IS PRIVATE AND CONFIDENTIAL AND IS SUPPLIED ON THE EXPRESS CONDITION THAT IT IS NOT TO BE USED FOR ANY PURPOSE OR COPIED OR COMMUNICATED TO ANY OTHER PERSON WITHOUT WRITTEN PERMISSION FROM DART AEROSPACE LTD.

lower crew door window, and an upper crew door window.

52.7.4.1 Removal

52.7.4.1.1 Remove forward crew door window (6, Figure 52-11) as follows:

52.7.4.1.1.1 Drill out rivets using a 0.128 in. diameter drill.

52.7.4.1.1.2 Separate sealant from window using putty knife or spatula.

52.7.4.1.1.3 Remove window from helicopter.

52.7.4.1.2 Remove lower crew door window (5) as follows:

52.7.4.1.2.1 Remove access door from lower edge of door.

52.7.4.1.2.2 Remove three screws, which attach handle, from lower crew door window.

52.7.4.1.2.3 Loosen adjustable stop and slide window downward and remove through access door opening.

52.7.4.1.3 Remove upper crew door window (2) as follows:

52.7.4.1.3.1 Remove nuts, washers, and screws attaching upper crew door window to helicopter.

52.7.4.1.3.2 Separate window from sealing compound and remove window from helicopter.

52.7.4.2 Inspection and repair

52.7.4.2.1 Inspect windows to damage limits shown in Figure 52-12.

52.7.4.2.2 Refer to FAA Publication AC 43.13-1B, Aircraft Inspection and Repair, for repair methods.

52.7.4.3 Installation

MATERIALS REQUIRED

NUMBER	NOMENCLATURE
C-305	Aliphatic Naphtha
C-308	Adhesive

52.7.4.3.1 Prior to installation of any crew door window, wash window with a mild detergent and water solution. Dry with a soft, dry cloth.

52.7.4.3.2 Install upper crew door window (2, Figure 52-11) as follows:

52.7.4.3.2.1 Remove old sealant from mounting flange with putty knife, spatula, or other suitable tool.

CAUTION

WHEN CLEANING MOUNTING FLANGE AND WINDOWS, USE ONLY ALIPHATIC NAPHTHA, TYPE II (C-305). DO NOT USE ALIPHATIC NAPHTHA, TYPE I, AS IT WILL CLOUD WINDOWS.

52.7.4.3.2.2 Wipe and clean mounting flange with aliphatic naphtha (C-305). If old window is being installed, clean edge of window using aliphatic naphtha.

52.7.4.3.2.3 Position a new window over opening. Trim surplus edge to permit window to be in mounting position against flange.

NOTE

Do not trim window to final size until all mounting holes have been drilled.

52.7.4.3.2.4 Position window against mounting flange, and using a 0.146 to 0.156 in. diameter drill, back drill two holes on edge of window.

52.7.4.3.2.5 Secure window to mounting flange with four dural screws, washers, and nuts. Lightly tighten nuts. Finish drilling holes in window.

52.7.4.3.2.6 Determine proper edge distance, mark, and remove window. Trim window edge to

• COPYRIGHT © 2007 BY DART AEROSPACE LTD. •
THIS DOCUMENT IS PRIVATE AND CONFIDENTIAL AND IS SUPPLIED ON THE EXPRESS CONDITION THAT IT IS NOT TO BE USED FOR ANY PURPOSE OR COPIED OR COMMUNICATED TO ANY OTHER PERSON WITHOUT WRITTEN PERMISSION FROM DART AEROSPACE LTD.

0.50 in. (12.7 mm).

52.7.4.3.2.7 Remove all dust and foreign matter from window mating area and from window mounting flange.

52.7.4.3.2.8 Apply a 0.125 in. (3.18 mm) wide bead of adhesive (C-308).

52.7.4.3.2.9 Position window to mounting flange, align holes, and install screws, washers, and nuts.

CAUTION

WHEN CLEANING WINDOWS, USE ONLY ALIPHATIC NAPHTHA, TYPE II (C-305). DO NOT USE ALIPHATIC NAPHTHA, TYPE I, AS IT WILL CLOUD WINDOWS.

52.7.4.3.2.10 Remove excess sealant from around window using aliphatic naphtha (C-305).

52.7.4.3.3 Install lower crew door window (5) as follows:

52.7.4.3.3.1 Guide window upward through slot in bottom of door and into window channels.

52.7.4.3.3.2 Check progress of window through opening in aft edge of door.

52.7.4.3.3.3 With window in a partially open position, engage adjustable stop.

52.7.4.3.3.4 Install handle using three screws.

52.7.4.3.3.5 Install lower access door.

52.7.4.3.4 Install forward crew door window as follows:

52.7.4.3.4.1 Remove old sealant from mounting flange with putty knife, spatula, or other suitable tool.

CAUTION

WHEN CLEANING MOUNTING FLANGE AND WINDOWS, USE ONLY ALIPHATIC NAPHTHA, TYPE II (C-305). DO NOT USE ALIPHATIC NAPHTHA, TYPE I, AS IT WILL CLOUD WINDOWS.

52.7.4.3.4.2 Wipe and clean edging and window with aliphatic naphtha (C-305).

52.7.4.3.4.3 If a new window is being installed, trim window to final size. Position window into mounting flange and drill mounting holes using 0.128 in. diameter drill.

52.7.4.3.4.4 Apply a 0.125 in. (3.18 mm) bead of adhesive (C-308) around window.

52.7.4.3.4.5 Install 0.125 in. (3.18 mm) rivets to secure window to crew door mounting flange.

52.7.4.3.4.6 Remove excess sealing compound from around edge of window using a clean, lint-free cloth moistened with aliphatic naphtha (C-305).

52.7.5 Passenger/Cargo Door Windows (Doors Equipped with Push out Windows)

The passenger door windows are made of clear acrylic material. The windows are installed in metal frames with silicone rubber retainers and are designed for emergency egress. EMERGENCY PUSH HERE decals are installed in each lower corner.

52.7.5.1 Removal

NOTE

Removal is not recommended unless required by window or retainer damage. Procedures are same for all push out windows.

52.7.5.1.1 Remove interior decor/trim as necessary to gain access to window supporting structure.

52.7.5.1.2 Using Mylar, Tedlar or similar tape, mask off structure adjacent to window retainer. The mask edge should be pressed firmly against, but not on, retainer.

• COPYRIGHT © 2007 BY DART AEROSPACE LTD. •
THIS DOCUMENT IS PRIVATE AND CONFIDENTIAL AND IS SUPPLIED ON THE EXPRESS CONDITION THAT IT IS NOT TO BE USED FOR ANY PURPOSE OR COPIED OR COMMUNICATED TO ANY OTHER PERSON WITHOUT WRITTEN PERMISSION FROM DART AEROSPACE LTD.

CHAPTER 52 – DOORS AND WINDOWS (52-00-00)

52.7.5.1.3 Remove filler (lock strip) (3, Figure 52-13) from retainer.

52.7.5.1.4 Push window out by pressing at lower corners as directed by decal.

CAUTION

DO NOT ALLOW WINDOW TO FALL. STORE WINDOW ON EDGE TO PREVENT CONTOUR CHANGE.

52.7.5.1.5 Pull retainer (6) from structure starting at un-bonded area at lower corners. Discard retainer.

52.7.5.2 Inspection

MATERIALS REQUIRED

NUMBER	NOMENCLATURE
C-305	Aliphatic Naphtha
C-423	Abrasive Paper
C-439	Aluminum Foil Tape
C-516	Clean Cloth

52.7.5.2.1 Inspection (windows installed).

CAUTION

NO REPAIRS ARE ALLOWED ON RETAINER (6) AND FILLER (3).

52.7.5.2.1.1 Visually inspect retainer (6, Figure 52-13) and filler (3) for cuts, cracks, or signs of deterioration. Replace if damage is found.

52.7.5.2.1.2 Verify retainer (6) is securely bonded to both sides of window frame (5) except in radius area of two lower corners. Replace retainer if any bond separation is found.

52.7.5.2.1.3 Inspect window (7) for cracking, crazing or reduced transparency. Replace damaged windows.

NOTE

Retainers (6) and fillers (3) shall be replaced when window is removed from retainer.

52.7.5.2.2 Inspection (windows removed).

52.7.5.2.2.1 Mark both lower corners of window frame as shown in 52-13. Mask these lower corner areas where the bond is prohibited with aluminum foil tape (C-439). Apply tape to both sides of the door.

52.7.5.2.2.2 Remove all old adhesive and finish from unmasked portion of window frame (5) using stiff fiber brush and a clean cloth (C-516) dampened with aliphatic naphtha (C-305).

52.7.5.2.2.3 For aluminum doors, use 360 grit abrasive paper (C-423) to remove any primer from unmasked area of window frame.

52.7.5.2.2.4 For composite doors, use 360 grit abrasive paper (C-423) and lightly abrade surface to be in contact with the retainer (seal) (6) on both sides of the door.

52.7.5.2.2.5 Remove the tape from the lower corners of the window frame.

52.7.5.2.2.6 Inspect edge of frame (5) for scratches, cracks, or other damage. Any scratches less than 0.004 in. (0.1016 mm) deep and 1.0 in. (25.4 mm) long may be polished out. Repairs must not be closer than 30. Inches (76.2 mm) from adjacent repairs. An area may be only repaired once.

CAUTION

WHEN CLEANING WINDOWS AND WINDOW FRAME, USE ONLY ALIPHATIC NAPHTHA, TYPE II (C-305). DO NOT USE ALIPHATIC NAPHTHA, TYPE I, AS IT WILL CLOUD WINDOWS.

52.7.5.2.2.7 Inspect window (7) for chamfered, nicked or notched edge, cracking, crazing or reduced transparency. Replace damaged windows.

52.7.5.2.3 Repair window (7) in accordance with paragraph 52.7.5.3.

• COPYRIGHT © 2007 BY DART AEROSPACE LTD. •
THIS DOCUMENT IS PRIVATE AND CONFIDENTIAL AND IS SUPPLIED ON THE EXPRESS CONDITION THAT IT IS NOT TO BE USED FOR ANY PURPOSE OR COPIED OR COMMUNICATED TO ANY OTHER PERSON WITHOUT WRITTEN PERMISSION FROM DART AEROSPACE LTD.

52.7.5.3 Repair

Repair windows in accordance with Figure 52-12 and FAA Publication 43.13-1B, Aircraft Inspection and Repair.

52.7.5.4 Installation

SPECIAL TOOLS REQUIRED

NUMBER	NOMENCLATURE
CP 293	Locking Strip (Filler) Insertion Tool
LT112	Retainer Installation Tool

MATERIALS REQUIRED

Refer to BHT-ALL-SPM for specification and source.

NUMBER	NOMENCLATURE
C-300	Adhesive
C-305	Aliphatic Naphtha
C-306	Toluene
C-307	Silicone Adhesive
C-316	Acetone
C-337	Sealant
C-347	Xylene
C-363	Adhesive
C-423	Abrasive Cloth or Paper
C-426	Masking Tape
C-516	Clean Cloth

52.7.5.4.1 If the window was removed to perform a structural repair that may have affected the window opening, measure window opening. Trim opening as required to the following dimensions (±0.03 inch (±0.8 mm)):

- for aluminum doors, window opening is 28.00 inches (71.1 cm) wide by 23.14 inches (58.8 cm) inches high (Figure 52-13)

- for composite doors, window opening is 28.00 inches (71.1 cm) wide by 28.09 inches (71.3 cm) inches high (Figure 52-13)

CAUTION

ENSURE WINDOW FRAME IS CLEAN AND COMPLETELY FREE OF ANY PAINT FINISHING MATERIALS

NOTE

Helicopter finishes will not adhere to surfaces where primer and adhesive are applied.

NOTE

Window opening must be in a protected area, shielded from wind, rain or other adverse environment conditions during installation.

52.7.5.4.2 Following applicable trimming or initial preparation, remove all residue using a clean cloth (C-516) moistened with toluene (C-306), xylene (C-347), or acetone (C-316). Wipe dry with a clean cloth (C-516).

52.7.5.4.3 Temporarily position new retainer (seal) (6) in window frame (5) opening.

52.7.5.4.4 With the new retainer (seal) (6) positioned in place, apply masking tape (C-426) around its periphery to the surface of both sides of the door. Remove the retainer.

52.7.5.4.5 For composite doors, apply adhesive (C-363) to the trimmed edge of the window frame (5) opening. Allow to dry for 6 hours at room temperature before installing retainer (seal) (6).

52.7.5.4.6 For aluminum doors, apply sealant (C-337) within masked area of window frame (5). Allow to dry 30 minutes before installing retainer (seal) (6).

52.7.5.4.7 Prepare and fit new retainer (seal) (6) in window frame (5) as follows:

52.7.5.4.7.1 Abrade retainer groove (4) with grit 80 grit abrasive paper (C-423).

52.7.5.4.7.2 Clean retainer groove (4) with a clean cloth (C-516) dampened with toluene (C-306), xylene (C-347), or acetone (C-316). Wipe dry with a clean cloth (C-516).

NOTE

Retainer filler groove (2) shall be positioned outboard.

• COPYRIGHT © 2007 BY DART AEROSPACE LTD. •
THIS DOCUMENT IS PRIVATE AND CONFIDENTIAL AND IS SUPPLIED ON THE EXPRESS CONDITION THAT IT IS NOT TO BE USED FOR ANY PURPOSE OR COPIED OR COMMUNICATED TO ANY OTHER PERSON WITHOUT WRITTEN PERMISSION FROM DART AEROSPACE LTD.

52.7.5.4.7.3 Position and hold retainer (seal) (6) in place with masking tape (C-426) so that it nests in all four corners of the opening. Position ends at approximately the 6 o'clock position and trim to length.

52.7.5.4.7.4 Mix adhesive (C-300) and apply to both trimmed ends of retainer (seal) (6). Allow to air dry for 15 to 30 minutes to a strong tack and press the ends together.

CAUTION

WHEN CLEANING WINDOWS AND METAL FRAME. USE ONLY ALIPHATIC NAPHTHA, TYPE II (C-305). DO NOT USE ALIPHATIC NAPHTHA, TYPE I, AS IT WILL CLOUD WINDOWS.

NOTE

The height and width are very similar on the square window. The window is normally oriented correctly when the part number is at the bottom.

52.7.5.4.8 Place window (7) in retainer window groove (1).

CAUTION

IF PROCURED AS A PRE-TRIMMED ITEM, DO NOT CUT OR STRETCH THE FILLER (LOCKING STRIP) (3) TO LENGTH. THE FULL LENGTH MUST BE USED.

IF FILLER (LOCKING STRIP) (3) IS PROCURRED AS RAW MATERIAL BY THE FOOT, TEMPORARILY PLACE FILLER (LOCKING STRIP) (3) ON TOP OF RETAINER FILLER GROOVE (2) AND CUT TO LENGTH USING A SHARP KNIFE. AFTER TRIMMING, THE FULL LENGTH MUST BE USED.

52.7.5.4.9 Install filler (locking strip) (3) in retainer filler groove (2), using locking strip insertion tools (8 and 9). Ends of filler shall meet approximately at the 12 o'clock position in retainer (seal) (6).

52.7.5.4.10 To avoid adhesive contact with the painted surfaces of the door, verify installation of masking tape (C-426) on both sides of the door around the periphery of the retainer (seal) (6). Mark lower corner areas not to be bonded on both sides of the door, as shown in Figure 52-13.

CAUTION

DO NOT APPLY ADHESIVE TO THE RETAINER WINDOW GROOVE (1), FILLER (LOCKING STRIP) (3), OR LOWER CORNER AREAS SHOWN IN FIGURE 52-13

52.7.5.4.11 Using a clean wooden or plastic stick or the AT 515 tool, locally lift the retainer (seal) (6) and inject adhesive (C-307) in a small bead between the retainer and window frame (5), all around the retainer except in lower corners areas shown in Figure 52-13. A small amount of adhesive squeeze-out around the edges is desirable.

CAUTION

DO NOT ALLOW TOLUENE (C-306) OR XYLENE (C-347) TO COME INTO CONTACT WITH WINDOW (7).

52.7.5.4.12 Remove excess silicone adhesive using a clean cloth (C-516) dampened with toluene (C-306), xylene (C-347), or acetone (C-316). Wipe dry with a clean cloth (C-516).

52.7.5.4.13 Turn the door over and apply adhesive (C-307) to the other side of the retainer (seal) (6) and window frame (5) per step 11 and step 12.

52.7.5.4.14 Remove all masking tape from around retainer (seal) (6).

52.7.5.4.15 Inspect periphery of window (7) and retainer (seal) (6) for gaps between the retainer and window and between the retainer and window frame (5).

• COPYRIGHT © 2007 BY DART AEROSPACE LTD. •
THIS DOCUMENT IS PRIVATE AND CONFIDENTIAL AND IS SUPPLIED ON THE EXPRESS CONDITION THAT IT IS NOT TO BE USED FOR ANY PURPOSE OR COPIED OR COMMUNICATED TO ANY OTHER PERSON WITHOUT WRITTEN PERMISSION FROM DART AEROSPACE LTD.

NOTE

Silicone adhesive (C-307) curing is obtained from moisture in the air. If window installation is performed in a very dry environment, curing may be accelerated by covering the window with a sealed plastic bag and placing a cloth wet with water in a sealed compartment on each side of the window. Make sure no water makes direct contact with the retainer.

52.7.5.4.16 Placard the window (7) with a "DO NOT DISTURB" placard and allow to dry. Do not remove the placard or release the helicopter for flight until the silicone adhesive has cured for a minimum of 24 hours at room temperature.

52.7.5.4.17 If not already installed, apply "EMERGENCY PUSH HERE" decals on lower corners of window designated for emergency egress (Chapter 11).

52.7.5.4.18 Install interior decor/trim (if applicable).

52.7.6 Cargo Hinged Panel Door Windows

The windows in the hinged panel door are constructed of clear acrylic material.

52.7.6.1 Removal

52.7.6.1.1 Remove hinged panel door from helicopter (paragraph 52.3.4.1).

52.7.6.1.2 Remove screws securing door latch Plexiglas covers.

52.7.6.1.3 Drill out rivets using a 0.128 in. diameter drill.

52.7.6.1.4 Separate window (4, Figure 52-11) from sealant using a non-metallic putty knife, spatula, or similar tool.

52.7.6.1.5 Carefully remove window from helicopter.

52.7.6.2 Inspection and repair.

Inspect and repair window as required. Refer to FAA publication AC 43.13-1B, Aircraft Inspection and Repair Manual.

52.7.6.3 Installation

MATERIALS REQUIRED

NUMBER	NOMENCLATURE
C-305	Aliphatic Naphtha
C-308	Adhesive

52.7.6.3.1 Prior to installation, clean windows with mild detergent and water. Dry with a soft, clean, lint-free cloth.

CAUTION

WHEN CLEANING WINDOWS AND MOUNTING FLANGE OF OLD ADHESIVE, USE ONLY ALIPHATIC NAPHTHA TYPE II (C-305). DO NOT USE ALIPHATIC NAPHTHA, TYPE I, AS IT WILL CLOUD WINDOWS.

52.7.6.3.2 Clean windows and mounting flange with aliphatic naphtha (C-305).

52.7.6.3.3 If a new window is being installed, drill rivet mounting holes using a 0.128 in. (No. 30) diameter drill.

52.7.6.3.4 Apply a 0.125 in. (3.18 mm) wide bead of adhesive (C-308) on window edges.

52.7.6.3.5 Mount window in panel and secure using 0.125 in. (3.18 mm) diameter rivets.

52.7.6.3.6 Install screws securing door latch Plexiglas cover to window.

52.7.6.3.7 Install door on helicopter (paragraph 52.3.4.3).

• COPYRIGHT © 2007 BY DART AEROSPACE LTD. •
THIS DOCUMENT IS PRIVATE AND CONFIDENTIAL AND IS SUPPLIED ON THE EXPRESS CONDITION THAT IT IS NOT TO BE USED FOR ANY PURPOSE OR COPIED OR COMMUNICATED TO ANY OTHER PERSON WITHOUT WRITTEN PERMISSION FROM DART AEROSPACE LTD.

CHAPTER 53
FUSELAGE
(53-00-00)

• COPYRIGHT © 2007 BY DART AEROSPACE LTD. •
THIS DOCUMENT IS PRIVATE AND CONFIDENTIAL AND IS SUPPLIED ON THE EXPRESS CONDITION THAT IT IS NOT TO BE USED FOR ANY PURPOSE OR COPIED OR COMMUNICATED TO ANY OTHER PERSON WITHOUT WRITTEN PERMISSION FROM DART AEROSPACE LTD.

TABLE OF CONTENTS

Table of Contents 2
List of Figures 2
53.1 Fuselage 3
53.2 Forward Fuselage 3
53.3 Crew Seat Tracks 3
53.3.1 Crew Seat Tracks - Removal 3
53.3.2 Crew Seat Tracks - Inspection 3
53.3.2 Crew Seat Tracks - Installation 4
53.4 Tension Rod Assembly 4
53.4.1 Tension Rod Assembly - Removal 4
53.4.2 Tension Rod Assembly - Inspection 4
53.4.3 Tension Rod Assembly - Installation 4
53.5 Tailboom 10
53.5.1 Removal 10
53.5.2 Inspection 10
53.5.3 Repair 11
53.5.4 Installation 11
53.6 Generic Sheet Metal Part Replacement Procedure 12

LIST OF FIGURES

Figure 53-1. Eagle Single Helicopter Fuselage and Major Components 5
Figure 53-2. Forward Fuselage 6
Figure 53-3. Crew Seat Track Assemblies - Removal and Installation 7
Figure 53-4. Tension Rod Assembly - Removal and Installation 8
Figure 53-5. Tension Rod Assembly - Damage Limits 9
Figure 53-6. Tailboom 13
Figure 53-7. Control Disconnect Points for Tailboom Removal 14
Figure 53-8. Tailboom Support Assembly, T102012 15
Figure 53-9. Tailboom Attaching Bolts 16
Figure 53-10. Tail Rotor Gearbox Support Fitting - Damage and Corrosion Limits (Sheet 1 of 3) 17
Figure 53-10. Tail Rotor Gearbox Support Fitting - Damage and Corrosion Limits (Sheet 2 of 3) 18
Figure 53-10. Tail Rotor Gearbox Support Fitting - Damage and Corrosion Limits (Sheet 3 of 3) 19

• COPYRIGHT © 2007 BY DART AEROSPACE LTD. •
THIS DOCUMENT IS PRIVATE AND CONFIDENTIAL AND IS SUPPLIED ON THE EXPRESS CONDITION THAT IT IS NOT TO BE USED FOR ANY PURPOSE OR COPIED OR COMMUNICATED TO ANY OTHER PERSON WITHOUT WRITTEN PERMISSION FROM DART AEROSPACE LTD.

53.1 FUSELAGE

The fuselage consists of forward fuselage and tailboom. The forward fuselage (1, Figure 53-1) is of combined semi-monocoque and reinforced shell construction. The tailboom (6) is of semi-monocoque construction.

53.2 FORWARD FUSELAGE

The forward fuselage (Figure 53-2) is built up on two main longitudinal beams and is of combined semi-monocoque and reinforced-shell construction with transverse bulkheads and metal covering. The longitudinal beams act as primary supporting structure for the cabin section, landing gear, fuel cells, engine, transmission, tailboom, and useful load. Work and engine decks, some main beam panels, as well as cabin floor and cabin roof panels, are of aluminum alloy honeycomb construction. Avionics equipment is contained in the nose compartment. Lower and upper hinged nose compartment doors provide access to the electrical compartment. Crew doors, passenger-cargo doors, and hinged panel doors on both sides of the helicopter permit entrance and exit. Acrylic windows in lower nose compartment, roof, and doors permit a wide range of visibility. Transmission and engine cowling may be opened or removed for access to those areas. The cargo/passenger area is equipped with cargo tiedown rings and studs.

Repair of structural components on the forward fuselage is provided in BHT-MED-SRM-1. Other structural inspection and repair procedures are included in FAA Publication AC 43.13-1B, Aircraft Inspection and Repair. Repair of components and assemblies installed on the fuselage is contained within appropriate chapters of this manual and companion publications.

53.3 CREW SEAT TRACKS

53.3.1 Crew Seat Tracks - Removal

53.3.1.1 Remove the applicable crew seat (Chapter 25)

53.3.1.2 Remove right-hand track assemblies (3, Figure 53-3) as follows:

53.3.1.2.1 Remove the screws (1), washers (2) and the right hand track assembly (3).

53.3.1.3 Remove left hand track assemblies (6) as follows:

53.3.1.3.1 Remove the two screws (4) and spacers (5).

53.3.1.3.2 Remove the screws (1), washers (2) and the left hand track assembly (6).

53.3.2 Crew Seat Tracks - Inspection

NOTE

It is not necessary to remove a track assembly (3 or 6, Figure 53-3) to inspect it for wear; however, the seat assembly must be removed.

53.3.2.1 Hold a straightedge against the crown of the central rail of the right hand or left hand track assembly (3 or 6) as shown. The straightedge must be at least as long as the track assembly.

53.3.2.2 Look for gaps between the bottom of the straightedge and the rail, particularly near the adjustment holes at the forward end.

53.3.2.3 If you find a gap that is more than 0.050 inch (1.27 mm), remove and replace the right hand or left hand track assembly (3 or 6) with a serviceable part.

53.3.2.4 Visually examine the exposed areas of the right hand or left hand track assembly (3 or 6) for cracks, mechanical damage and corrosion damage. Replace as required.

53.3.2.5 Visually examine the exposed areas of the attaching hardware for wear, mechanical damage and corrosion damage. Replace as required.

• COPYRIGHT © 2007 BY DART AEROSPACE LTD. •
THIS DOCUMENT IS PRIVATE AND CONFIDENTIAL AND IS SUPPLIED ON THE EXPRESS CONDITION THAT IT IS NOT TO BE USED FOR ANY PURPOSE OR COPIED OR COMMUNICATED TO ANY OTHER PERSON WITHOUT WRITTEN PERMISSION FROM DART AEROSPACE LTD.

53.3.2 Crew Seat Tracks - Installation

53.3.2.1 Install right hand track assemblies (3, Figure 53-3) as follows:

53.3.2.1.1 Make sure the mating surfaces are clean.

53.3.2.1.2 Install the right hand track assembly (3) with the screws (1) and the washers (2).

WARNING

MAKE SURE YOU INSTALL THE SPACERS (5) ON THE LEFT HAND TRACK ASSEMBLY (6) AS SHOWN. IF THE SPACERS ARE OMITTED, THE SEAT CAN INTERFERE WITH COLLECTIVE STICK TRAVEL.

53.3.2.2 Install the left hand track assemblies (6) as follows:

53.3.2.2.1 Make sure the mating surfaces are clean.

53.3.2.2.2 Install the left hand track assembly (6) with the two screws (4) and spacers (5) in the second hole position from the front of the track.

53.3.2.2.3 Install the screws (1) and the washers (2) in the remaining holes.

53.3.2.3 Install the applicable crew seat (Chapter 25)

53.4 TENSION ROD ASSEMBLY

53.4.1 Tension Rod Assembly - Removal

53.4.1.1 Remove the nut (1, Figure 53-4), bolt (3) and washers (2) from the aft end of the tension rod assembly (4).

53.4.1.2 Remove the nut (1), bolt (3), washers (2) and tension rod assembly (4) from the bulkhead attachment point.

53.4.2 Tension Rod Assembly - Inspection

53.4.2.1 Examine the tension rod assembly (4, Figure 53-4) for cracks, wear, mechanical damage and corrosion damage (Figure 53-5). Repair or replace as applicable.

53.4.3 Tension Rod Assembly - Installation

53.4.3.1 Install the tension rod assembly (4, Figure 53-4) on the bulkhead attachment point with the bolt (3), washers (2) and nut (1). Tighten the nut.

53.4.3.2 Install the aft end of the tension rod assembly (4) with the bolt (3), washer (2) and nut (1). Tighten the nut.

• COPYRIGHT © 2007 BY DART AEROSPACE LTD. •
THIS DOCUMENT IS PRIVATE AND CONFIDENTIAL AND IS SUPPLIED ON THE EXPRESS CONDITION THAT IT IS NOT TO BE USED FOR ANY PURPOSE OR COPIED OR COMMUNICATED TO ANY OTHER PERSON WITHOUT WRITTEN PERMISSION FROM DART AEROSPACE LTD.

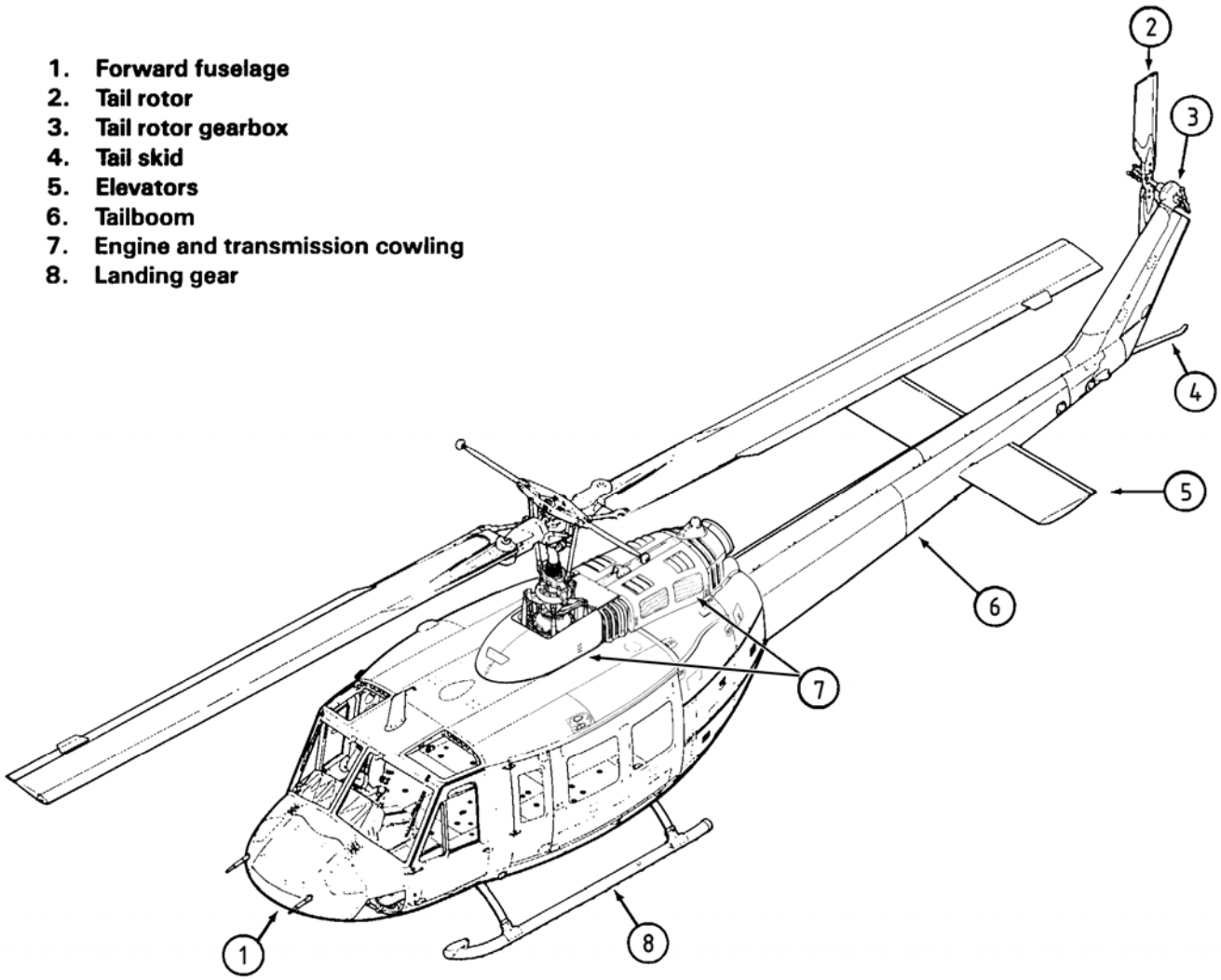

Figure 53-1. Eagle Single Helicopter Fuselage and Major Components

• COPYRIGHT © 2007 BY DART AEROSPACE LTD. •
THIS DOCUMENT IS PRIVATE AND CONFIDENTIAL AND IS SUPPLIED ON THE EXPRESS CONDITION THAT IT IS NOT TO BE USED FOR ANY PURPOSE OR COPIED OR COMMUNICATED TO ANY OTHER PERSON WITHOUT WRITTEN PERMISSION FROM DART AEROSPACE LTD.

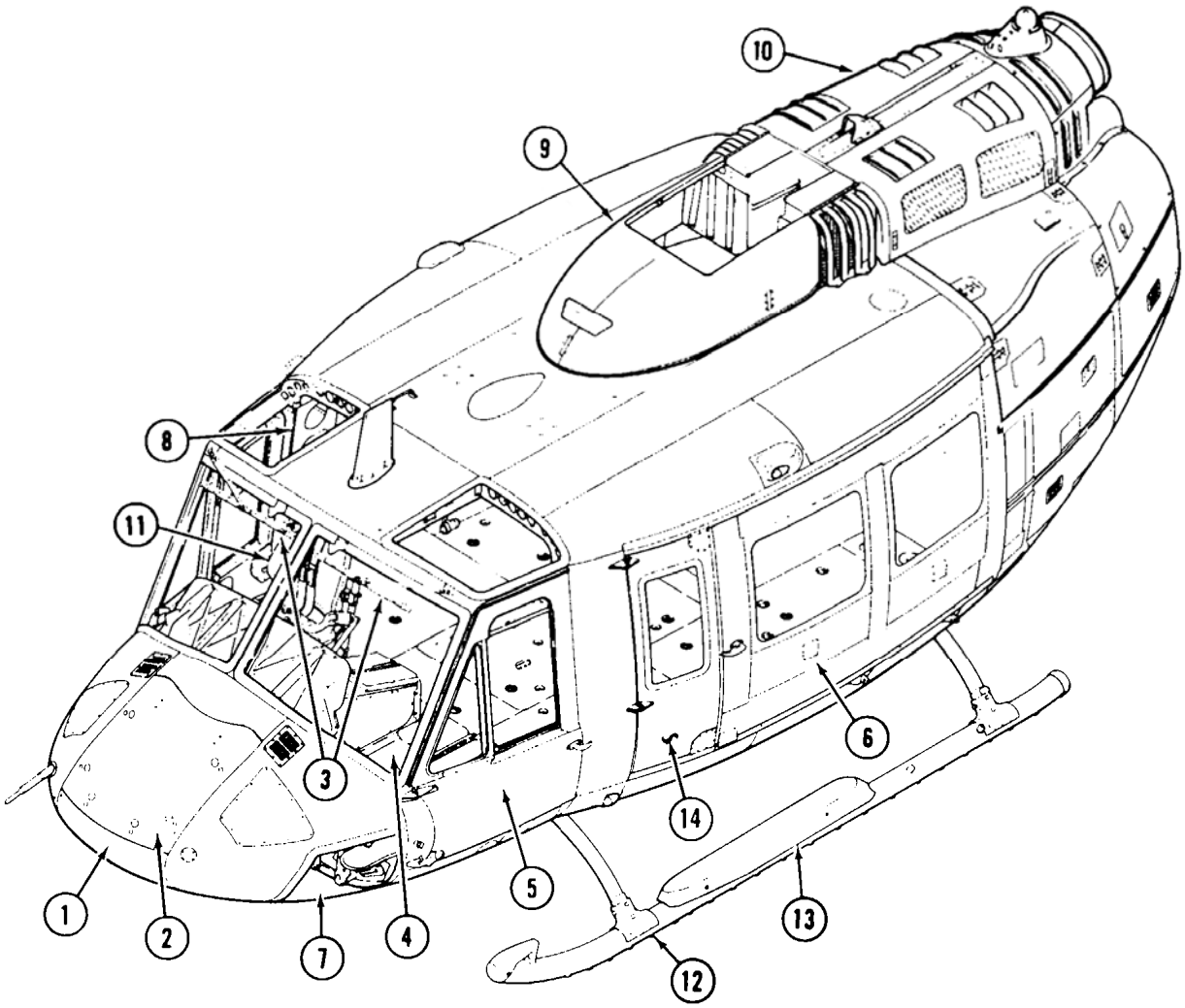

1. Lower hinged nose door
2. Upper hinged nose door
3. Windshield wipers
4. Windshields
5. Crew doors
6. Passenger — cargo doors
7. Nose compartment windows
8. Roof windows
9. Transmission cowling
10. Engine cowling
11. Crew seat
12. Landing gear
13. Passenger step
14. Hinged panel door

Figure 53-2. Forward Fuselage

• COPYRIGHT © 2007 BY DART AEROSPACE LTD. •
THIS DOCUMENT IS PRIVATE AND CONFIDENTIAL AND IS SUPPLIED ON THE EXPRESS CONDITION THAT IT IS NOT TO BE USED FOR ANY PURPOSE OR COPIED OR COMMUNICATED TO ANY OTHER PERSON WITHOUT WRITTEN PERMISSION FROM DART AEROSPACE LTD.

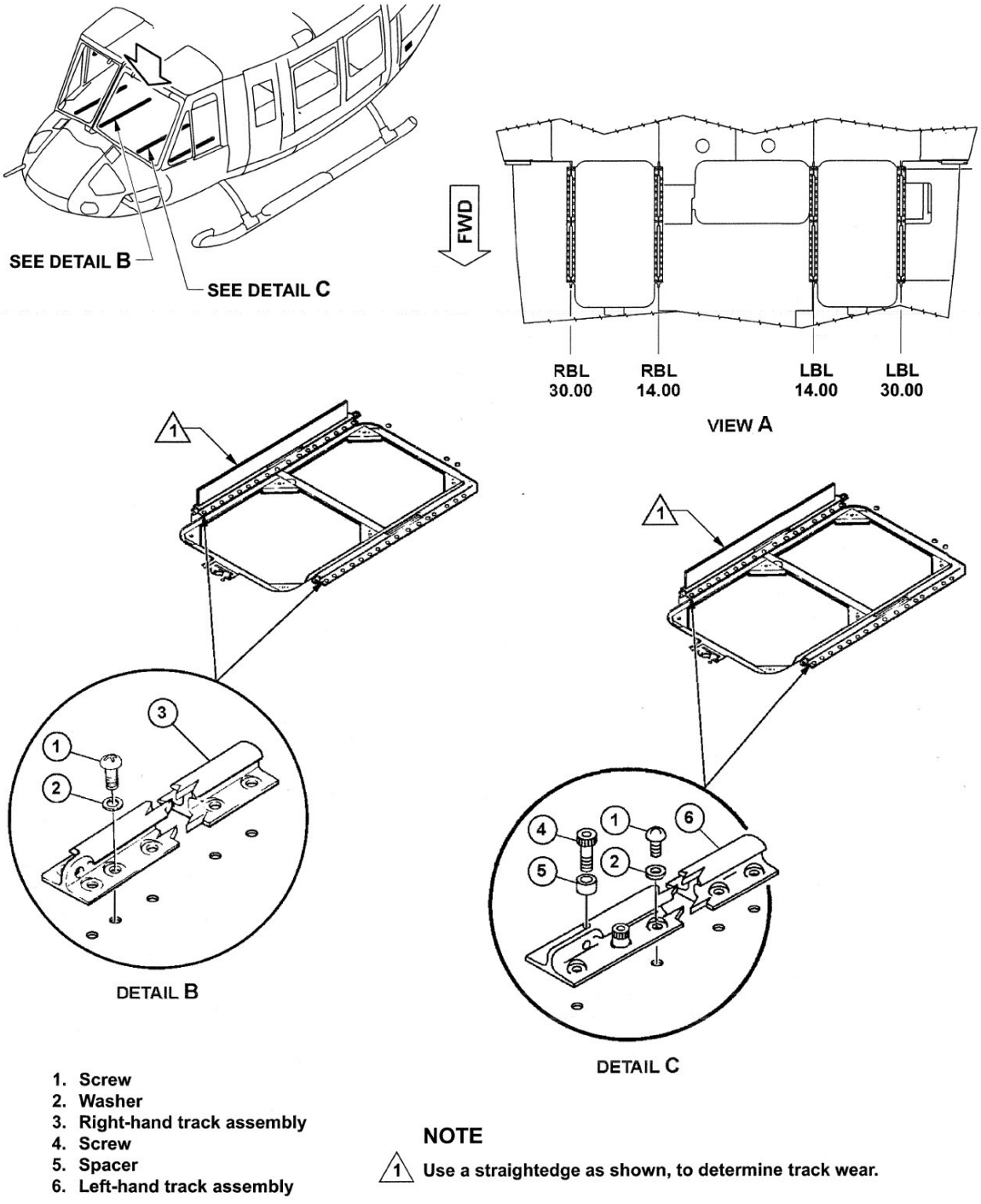

Figure 53-3. Crew Seat Track Assemblies - Removal and Installation

• COPYRIGHT © 2007 BY DART AEROSPACE LTD. •
THIS DOCUMENT IS PRIVATE AND CONFIDENTIAL AND IS SUPPLIED ON THE EXPRESS CONDITION THAT IT IS NOT TO BE USED FOR ANY PURPOSE OR COPIED OR COMMUNICATED TO ANY OTHER PERSON WITHOUT WRITTEN PERMISSION FROM DART AEROSPACE LTD.

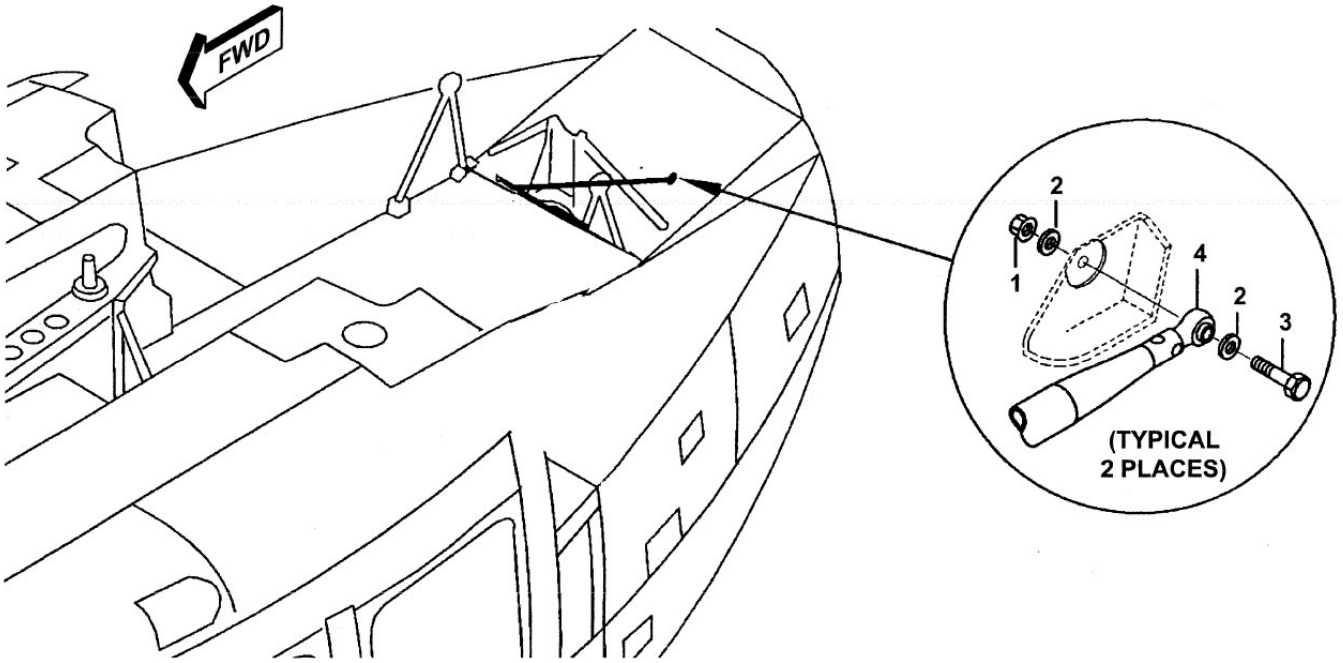

1. Nut
2. Washer
3. Bolt
4. Tension rod assembly

Figure 53-4. Tension Rod Assembly - Removal and Installation

• COPYRIGHT © 2007 BY DART AEROSPACE LTD. •
THIS DOCUMENT IS PRIVATE AND CONFIDENTIAL AND IS SUPPLIED ON THE EXPRESS CONDITION THAT IT IS NOT TO BE USED FOR ANY PURPOSE OR COPIED OR COMMUNICATED TO ANY OTHER PERSON WITHOUT WRITTEN PERMISSION FROM DART AEROSPACE LTD.

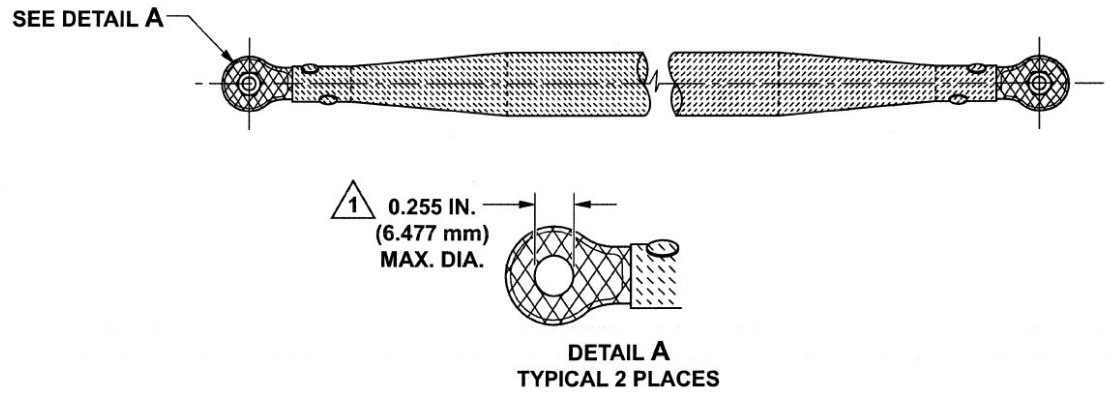

TENSION ROD (212-030-170)

DAMAGE AREA REPAIR SYMBOLS

TYPE OF DAMAGE	MAXIMUM DEPTH AND REPAIR AREAS ALLOWED	
SCRATCHES AND NICKS	0.010 In. (0.254 mm) after cleanup	
SCRATCHES		0.005 In. (0.127 mm) after cleanup 2
DENTS		Depth: 0.005 In. (0.127 mm) Length: 1.00 In. (25.40 mm) maximum 2
CORROSION	0.005 In. (0.127 mm) to 0.010 In. (0.254 mm) after cleanup	0.0025 In. (0.0635 mm) before and 0.005 In. (0.127 mm) after cleanup 3

NOTES

1. Bushings 20-006J-8 or 20-006C-8 can be installed in the holes. Wet install with epoxy polyamide primer (C-204). Ream bushings from 0.249 to 0.251 inch (6.325 to 6.375 mm) after installation.
2. Cleanup in longitudinal direction only and must not be more than 25% of the circumference at each location.
3. Dent must be to a minimum of 3.00 inches (76.20 mm) apart and no dent is permitted in the neck area.

Figure 53-5. Tension Rod Assembly - Damage Limits

• COPYRIGHT © 2007 BY DART AEROSPACE LTD. •
THIS DOCUMENT IS PRIVATE AND CONFIDENTIAL AND IS SUPPLIED ON THE EXPRESS CONDITION THAT IT IS NOT TO BE USED FOR ANY PURPOSE OR COPIED OR COMMUNICATED TO ANY OTHER PERSON WITHOUT WRITTEN PERMISSION FROM DART AEROSPACE LTD.

53.5 TAILBOOM

The tailboom (Figure 53-6) is of semi-monocoque construction. External components consist of formed aluminum alloy skins and driveshaft covers, a fiberglass fairing, aluminum honeycomb panels, and one aluminum alloy honeycomb cover. Internal components of the boom and synchronized elevator are of aluminum alloy. The tailboom supports the tail rotor driveshafts, gearboxes, and driveshaft hangers. The cargo compartment is located in the forward end with the door on the right side.

53.5.1 Removal

SPECIAL TOOLS REQUIRED

NUMBER	NOMENCLATURE
T102012	Tailboom support

53.5.1.1 Remove left and right tail pipe lower fairings.

53.5.1.2 Remove clamps from number two driveshaft, remove driveshaft section (Chapter 63).

53.5.1.3 Open access door on right aft side of forward fuselage. Disconnect electrical harnesses and antenna cables.

53.5.1.4 Disconnect tail rotor and synchronized elevator control tubes (Figure 53-7 and Chapter 63).

53.5.1.5 Remove plug buttons (Carr fasteners) from four tailboom attaching points.

53.5.1.6 Place T102012 or equivalent tailboom support under tailboom (Figure 53-8) and remove bolts attaching tailboom to fuselage (Figure 53-9).

NOTE

If tailboom is to be hoisted, refer to Chapter 7.

53.5.1.7 Remove tailboom.

53.5.2 Inspection

MATERIALS REQUIRED

NUMBER	NOMENCLATURE
C-308	Sealant
C-309	Methyl-Ethyl-Ketone (MEK)

53.5.2.1 Inspect doors, covers, and access panels for misalignment, damage, and security of mounting.

53.5.2.2 Inspect tailboom skin for dents, corrosion, scratches, or other damage.

53.5.2.3 Inspect structure (longerons, spar caps, bulkheads and ribs) for cracks, distortion, corrosion, or loose rivets.

53.5.2.4 Inspect forward side of vertical fin spar caps and web from upper tailboom skin to approximately 4.0 inches (101.6 mm) below upper tailboom skin as follows:

53.5.2.4.1 Remove aft tailboom flight control inspection door (Chapter 52).

NOTE

If necessary, clean area to be inspected with cloth dampened with MEK (C-309).

53.5.2.4.2 Face aft from inside of tailboom and use bright light and small mirror to inspect areas for cracks. Pay particular attention to areas near rivet holes, especially cold worked holes (ASB 212-90-63).

53.5.2.5 Inspect tailboom upper longerons as follows:

53.5.2.5.1 Remove plug button at B.S. 99.00.

NOTE

Paint fissures are common in the splice area. Cracks will be evident by black powder emanating from cracked area, and corrosion will leave evidence of white powder.

53.5.2.5.2 Using a borescope or suitable means, inspect inside of longeron paying particular attention to cracking and/or corrosion

• COPYRIGHT © 2007 BY DART AEROSPACE LTD. •
THIS DOCUMENT IS PRIVATE AND CONFIDENTIAL AND IS SUPPLIED ON THE EXPRESS CONDITION THAT IT IS NOT TO BE USED FOR ANY PURPOSE OR COPIED OR COMMUNICATED TO ANY OTHER PERSON WITHOUT WRITTEN PERMISSION FROM DART AEROSPACE LTD.

in area of splice.

53.5.2.5.3 Report any cracks to Product Support Engineering.

53.5.2.5.4 Install plug button with sealant (C-308).

53.5.2.6 Inspect tailboom bonded panels for dents, scratches delaminations and corrosion.

53.5.2.7 Inspect diameter of tailboom-to-fuselage attaching bolt holes in tailboom fittings for elongation. The allowable limits are as follows:

LOCATION	MINIMUM DIAMETER INCH	MAXIMUM DIAMETER INCH
Upper right	0.501 (12.72 mm)	0.516 (13.11 mm)
Upper left	0.563 (14.30 mm)	0.578 (14.68 mm)
Lower left	0.376 (9.55 mm)	0.391 (9.93 mm)
Lower right	0.376 (9.55 mm)	0.391 (9.93 mm)

53.5.2.8 Inspect corresponding four tailboom-to-fuselage attaching bolt holes in fuselage fittings for elongation. The allowable limits are as shown, above.

53.5.2.9 Inspect tail rotor gearbox support fitting in accordance with Figure 53-10.

53.5.3 Repair

MATERIALS REQUIRED

NUMBER	NOMENCLATURE
C-222	Catalyzed Epoxy Primer
C-233	Polyurethane Enamel
C-309	Methyl-Ethyl-Ketone (MEK)

53.5.3.1 Replace damaged or unserviceable doors, cover, and access panels.

53.5.3.2 Touch up paint on mating surfaces of tail rotor driveshaft covers as follows:

53.5.3.2.1 Clean area with MEK (C-309). Allow to air dry.

53.5.3.2.2 Apply one coat of catalyzed epoxy primer (C-222). Allow to dry 1 hour. Apply one coat of polyurethane enamel (C-233).

53.5.3.3 Perform necessary structural repairs in accordance with BHT-MED-SRM-1.

53.5.3.4 Replace damaged or unserviceable fasteners and hinges on tail rotor driveshaft covers.

53.5.3.5 Replace tailboom if attaching holes in tailboom fittings exceed maximum allowable diameter.

NOTE

If a new tailboom is installed, an alignment is recommended (Chapter 65).

53.5.3.6 When replacing tailboom, remove the following and install on replacement tailboom:

- Tail rotor controls (Chapter 67)
- Electrical and avionics (Chapter 96 and 97)
- Synchronized elevator controls (Chapter 67)
- Synchronized elevator (Chapter 67)
- Tail rotor driveshaft, hangers and bearings (Chapter 65)
- Intermediate gearbox (Chapter 65)
- Tail rotor gearbox (Chapter 65)
- Tail rotor driveshaft covers and vertical fin cover
- Access doors and inspection panels

53.5.4 Installation

MATERIALS REQUIRED

NUMBER	NOMENCLATURE
C-104	Corrosion Preventive Compound

53.5.4.1 Position tailboom to forward fuselage, line up bolt holes.

53.5.4.2. Apply a coating of corrosion preventive compound (C-104) to all bolt shanks prior to installation. Do not apply corrosion preventive compound to threads of bolts.

• COPYRIGHT © 2007 BY DART AEROSPACE LTD. •
THIS DOCUMENT IS PRIVATE AND CONFIDENTIAL AND IS SUPPLIED ON THE EXPRESS CONDITION THAT IT IS NOT TO BE USED FOR ANY PURPOSE OR COPIED OR COMMUNICATED TO ANY OTHER PERSON WITHOUT WRITTEN PERMISSION FROM DART AEROSPACE LTD.

53.5.4.3 Place countersunk washer (Figure 53-9) on each bolt with countersunk side of washer toward bolt head. Install bolts using plain washers, as required, between countersunk washer and fitting so not less than one thread or more than two threads are showing. Torque bolts as follows.

- Upper left – 1300 to 1600 in-lbs. (146.87 to 180.77 Nm).

- Upper right – 1000 to 1200 in-lbs. (112.98 to 135.58 Nm).

- Both bottom bolts – 400 to 430 in-lbs. (45.19 to 48.58 Nm).

53.5.4.4 Install plug buttons (Carr fasteners) in four tailboom attaching points.

53.5.4.5 Connect tail rotor and synchronized elevator control tubes (Figure 53-7 and Chapter 67).

53.5.4.6 Connect electrical harnesses and antenna cables (Chapter 97 and Chapter 98).

53.5.4.7 Install number two tail rotor driveshaft section (Chapter 63).

53.5.4.8 Install matched clamp sets on couplings (Chapter 63).

53.5.4.9 Close access doors and inspection panels (Chapter 6).

53.6 GENERIC SHEET METAL PART REPLACEMENT PROCEDURE

MATERIALS REQUIRED

NUMBER	NOMENCLATURE
C-251	Sealant
C-308	Sealant
C-328	Sealing Compound

NOTE

As no procedure can cover all sheet metal part replacements, the following guidelines can be used for most applications, but must be adapted as required. Refer to BHT-MED-SRM-1 for specific applications. For general practices, refer to FAA Publication AC 43.13-1B.

53.6.1 Once the part to be replaced has been determined, provide bracing and support as required. Refer to BHT-MED-SRM-1 (Table 4-1) for suggestions.

53.6.2 Identify the type, size and location of fasteners by looking at the manufactured head of the fasteners and referring to information in the BHT-MED-SRM-1

53.6.3 Remove part while making a note of which portion of the part was installed with sealant (if applicable).

53.6.4 Inspect supporting structure for cracks and damaged fastener holes. Repair or replace as required.

53.6.5 Trim and drill new part to fit in place. Maintain edge distance of 2D for all regular holes and 2.5D for all countersunk holes. Deburr.

53.6.6 Apply sealant of faying surfaces, as determined previously (if applicable). Unless otherwise stated, use sealant (C-251) or sealant (C-308) for general applications, or sealant (C-328) for screwed-on access panels (low, adhesion).

53.6.7 Install fasteners as identified previously. Apply a small bead of sealant (C-251) or sealant (C-308) around the part (if required).

53.6.8 Refinish as required (BHT-ALL-SPM).

• COPYRIGHT © 2007 BY DART AEROSPACE LTD. •
THIS DOCUMENT IS PRIVATE AND CONFIDENTIAL AND IS SUPPLIED ON THE EXPRESS CONDITION THAT IT IS NOT TO BE USED FOR ANY PURPOSE OR COPIED OR COMMUNICATED TO ANY OTHER PERSON WITHOUT WRITTEN PERMISSION FROM DART AEROSPACE LTD.

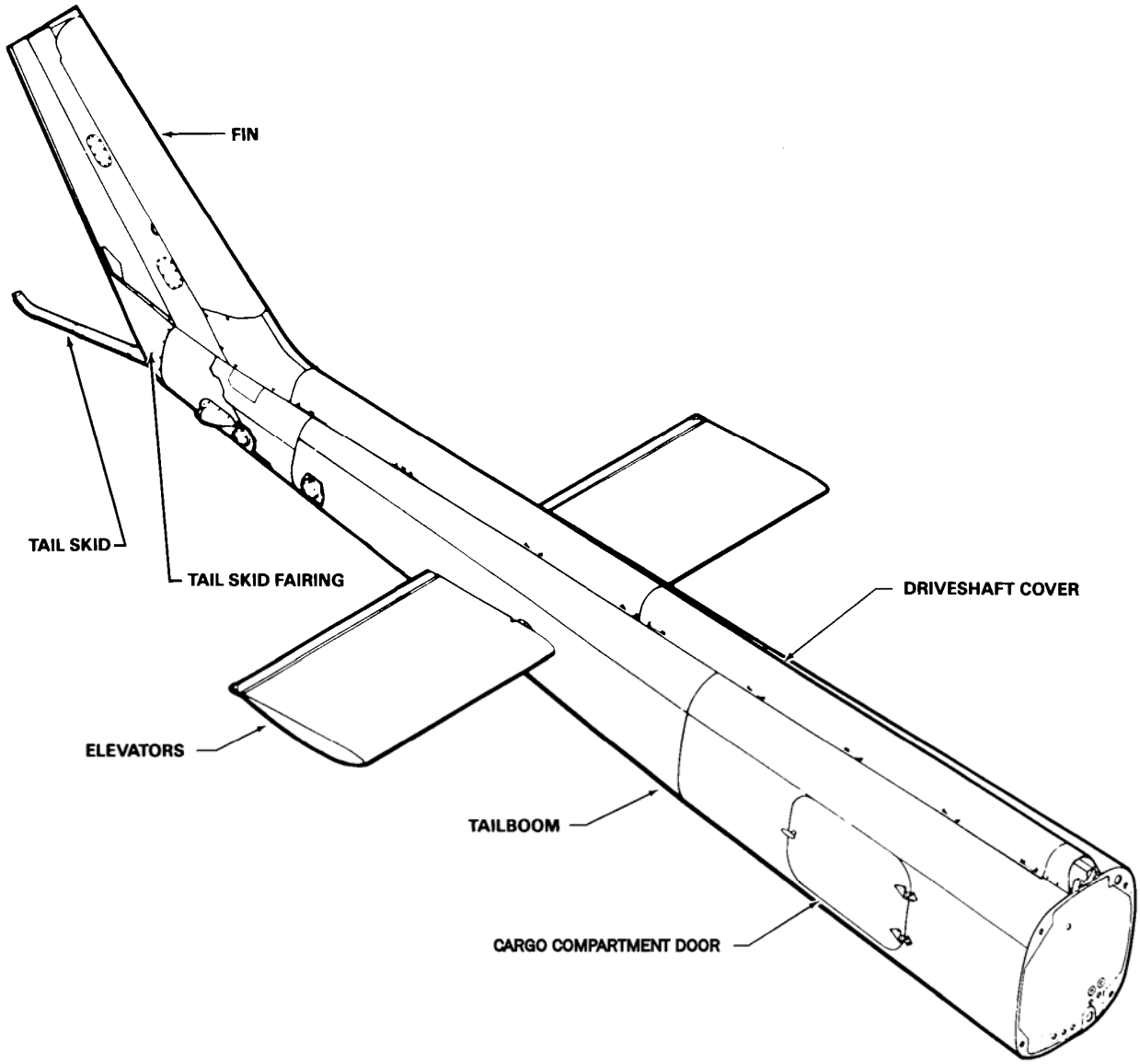

Figure 53-6. Tailboom

• COPYRIGHT © 2007 BY DART AEROSPACE LTD. •
THIS DOCUMENT IS PRIVATE AND CONFIDENTIAL AND IS SUPPLIED ON THE EXPRESS CONDITION THAT IT IS NOT TO BE USED FOR ANY PURPOSE OR COPIED OR COMMUNICATED TO ANY OTHER PERSON WITHOUT WRITTEN PERMISSION FROM DART AEROSPACE LTD.

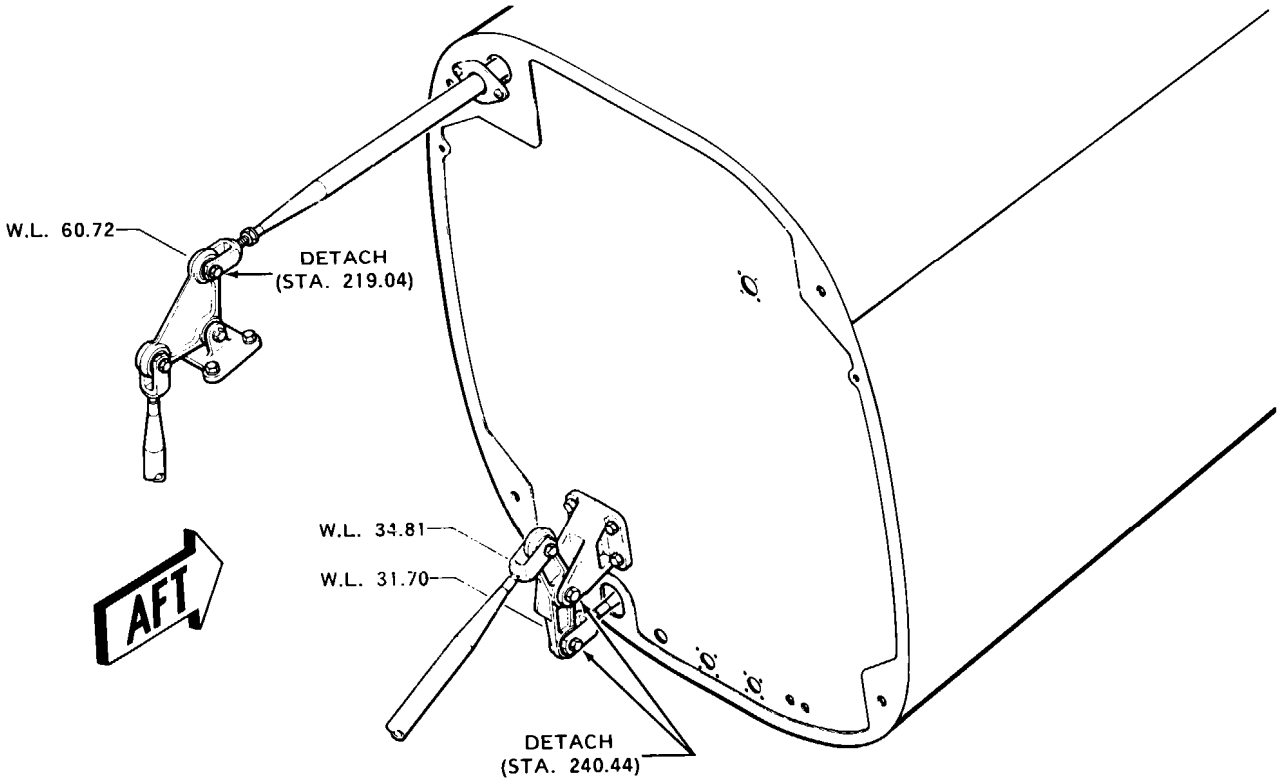

Figure 53-7. Control Disconnect Points for Tailboom Removal

• COPYRIGHT © 2007 BY DART AEROSPACE LTD. •
THIS DOCUMENT IS PRIVATE AND CONFIDENTIAL AND IS SUPPLIED ON THE EXPRESS CONDITION THAT IT IS NOT TO BE USED FOR ANY PURPOSE OR COPIED OR COMMUNICATED TO ANY OTHER PERSON WITHOUT WRITTEN PERMISSION FROM DART AEROSPACE LTD.

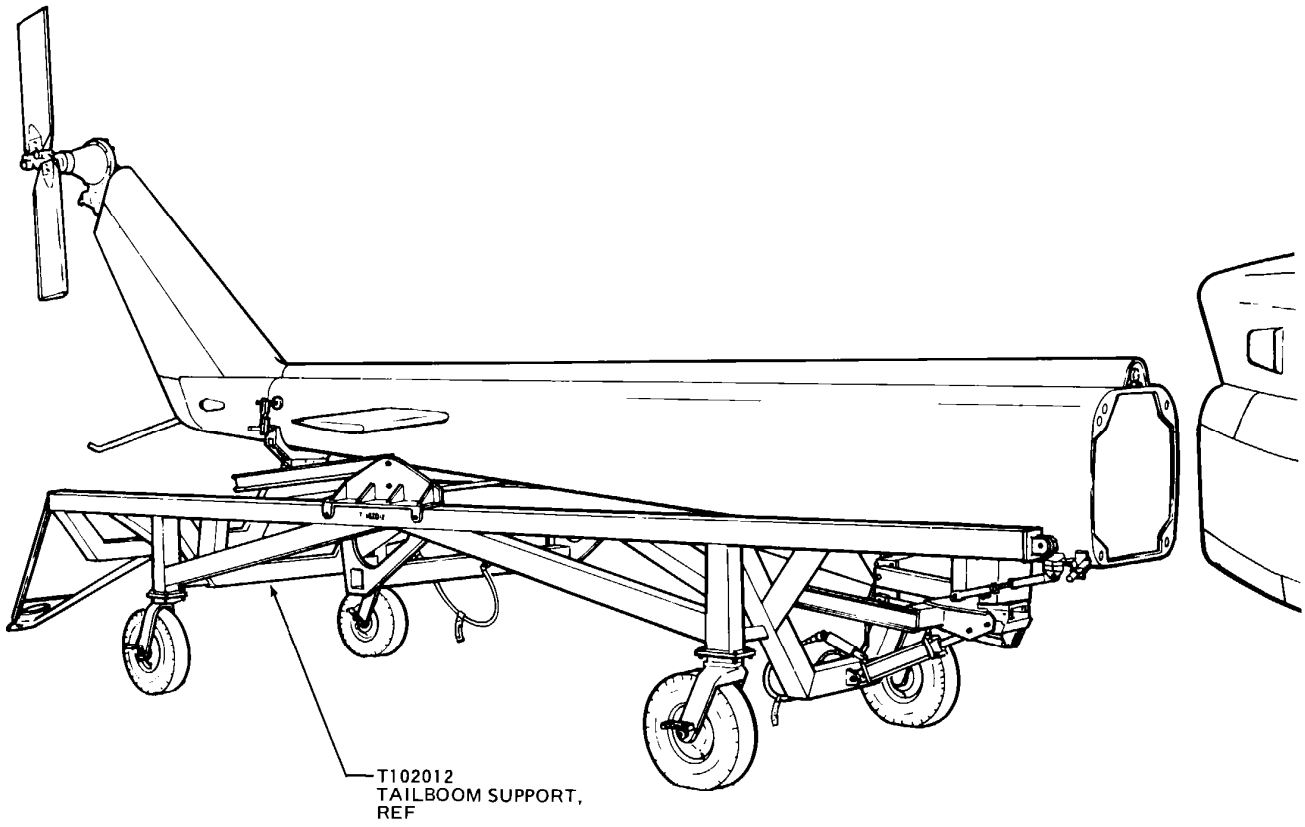

Figure 53-8. Tailboom Support Assembly, T102012

• COPYRIGHT © 2007 BY DART AEROSPACE LTD. •
THIS DOCUMENT IS PRIVATE AND CONFIDENTIAL AND IS SUPPLIED ON THE EXPRESS CONDITION THAT IT IS NOT TO BE USED FOR ANY PURPOSE OR COPIED OR COMMUNICATED TO ANY OTHER PERSON WITHOUT WRITTEN PERMISSION FROM DART AEROSPACE LTD.

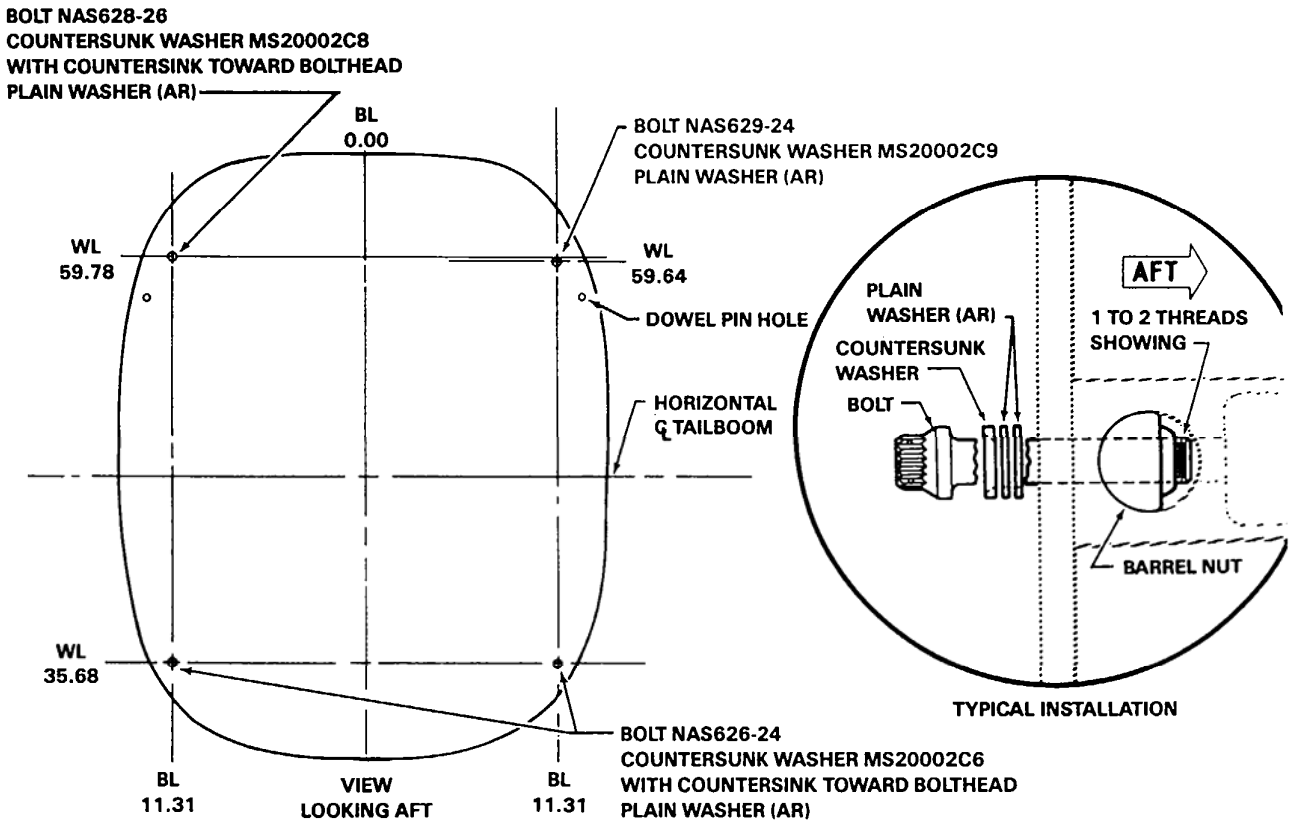

Figure 53-9. Tailboom Attaching Bolts

• COPYRIGHT © 2007 BY DART AEROSPACE LTD. •
THIS DOCUMENT IS PRIVATE AND CONFIDENTIAL AND IS SUPPLIED ON THE EXPRESS CONDITION THAT IT IS NOT TO BE USED FOR ANY PURPOSE OR COPIED OR COMMUNICATED TO ANY OTHER PERSON WITHOUT WRITTEN PERMISSION FROM DART AEROSPACE LTD.

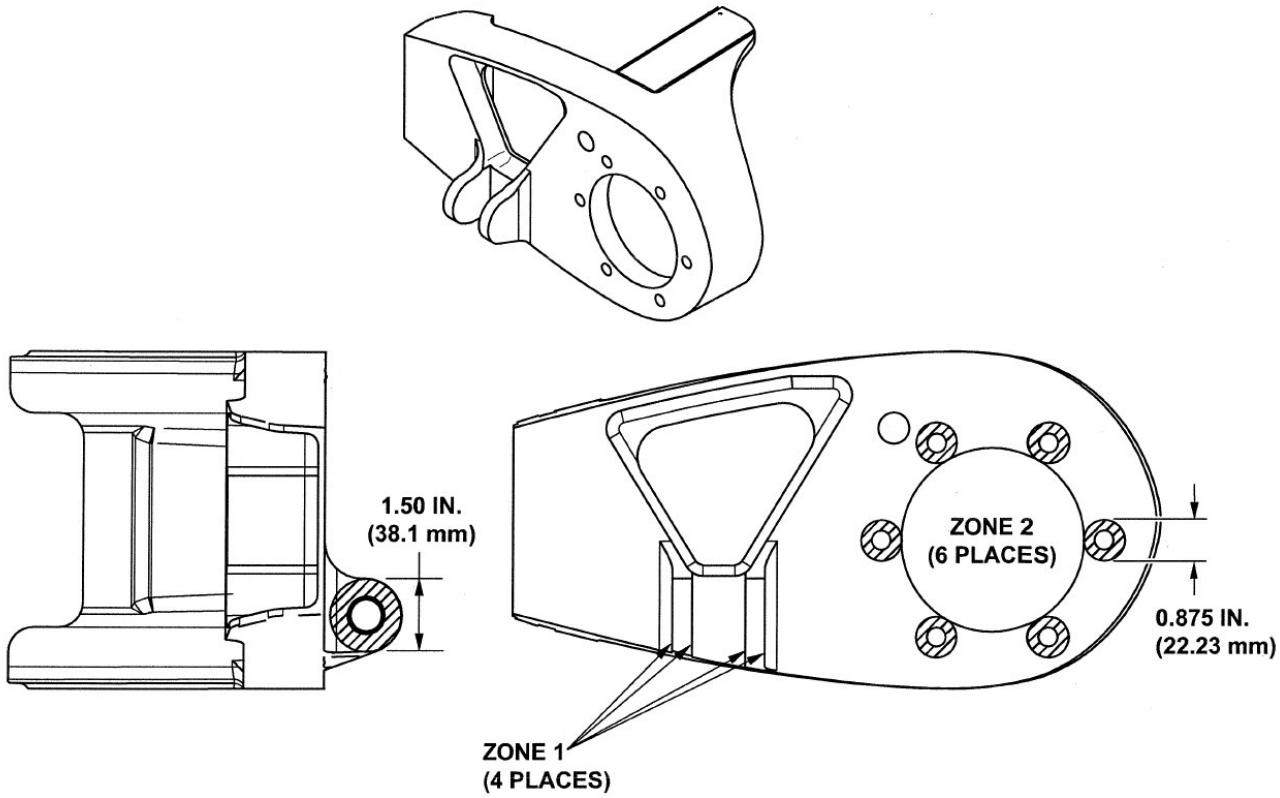

SUPPORT FITTING (212-030-103-001/-007)
MATERIAL: ALUMINUM ALLOY

No.	Characteristic	Inspection Method	Limit
	ZONE 1		
1	Corrosion on one lug face	Measure	For corrosion depth of <=0.020 inch (0.51 mm), remove twice the depth of the corrosion. Do not remove more than 0.040 inch (1.02 mm) from the cross hatched area.
2	Corrosion of both lug faces	Measure	For a combined depth of <=0.020 inch (0.51 mm, remove twice the depth of the corrosion (the sum of the removed material on both sides of cross hatched area must not exceed 0.040 inch (1.02 mm)
3	Corrosion damage to outer edge of the lug	Measure	For a corrosion depth of <=0.020 (0.51 mm), remove twice the depth of the corrosion. Do not remove more than 0.040 inch (1.02 mm) from the outer edge of the lug.

Figure 53-10. Tail Rotor Gearbox Support Fitting - Damage and Corrosion Limits (Sheet 1 of 3)

• COPYRIGHT © 2007 BY DART AEROSPACE LTD. •
THIS DOCUMENT IS PRIVATE AND CONFIDENTIAL AND IS SUPPLIED ON THE EXPRESS CONDITION THAT IT IS NOT TO BE USED FOR ANY PURPOSE OR COPIED OR COMMUNICATED TO ANY OTHER PERSON WITHOUT WRITTEN PERMISSION FROM DART AEROSPACE LTD.

No.	Characteristic	Inspection Method	Limit
4	Corrosion damage to the lug hole (not the bushing hole)	Measure	For a corrosion depth of <=0.010 inch (0.25 mm), uniformly remove twice the depth of the corrosion around the periphery of the hole. Do not remove more than 0.020 inch (0.51 mm) from any part of the lug hole surface. Maintain original lug hole centerline. Re-bush hole.
5	Corrosion damage to the bushing hole	Measure	Not allowed. Replace bushing.
6	Mechanical damage on one lug face	Measure	For a mechanical damage of <=0.040 inch (1.02 mm), remove the depth of the damage. Do not remove more than 0.040 inch (1.02 mm) from the cross hatched area.
7	Mechanical damage on both lug faces	Measure	For a combined mechanical damage of <=0.040 inch (1.02 mm), remove the depth of the damage (the sum of the removed material on both sides of the lug must not exceed 0.040 inch (1.02 mm).
8	Mechanical damage to outer edge of the lug	Measure	For a mechanical damage depth of <=0.020 inch (0.51 mm), remove the depth of the damage. Do not remove more than 0.020 inch (0.51 mm) form the edge of the lug.
9	Mechanical damage to the lug hole (not the bushing hole)	Measure	For a damage depth of <=0.020 inch (0.51 mm), uniformly remove the depth of the damage around the periphery of the hole. Do not remove more than 0.020 inch (0.51 mm) from any part of the lug. Maintain original lug hole centerline. Be-bush hole.
10	Mechanical damage to the bushing hole		Not allowed. Replace bushing.
	ZONE 2		
1	Corrosion on one spot face	Measure	For a corrosion depth of <=0.020 inch (0.51 mm), remove twice the depth of the corrosion. Do not remove more that 0.040 inch (1.02 mm) from the cross hatched area.
2	Corrosion damage to the lug hole (not the bushing hole)	Measure	For a corrosion depth of <=0.010 inch (0.25 mm), uniformly remove twice the depth of the corrosion around the periphery of the hole. Do not remove more than 0.020 inch (0.51 mm) from any part of the lug hole surface. Maintain original lug hole centerline. Re-bush hole.
3	Corrosion damage to the bushing hole	Measure	Not allowed. Replace bushing.

Figure 53-10. Tail Rotor Gearbox Support Fitting - Damage and Corrosion Limits (Sheet 2 of 3)

• COPYRIGHT © 2007 BY DART AEROSPACE LTD. •
THIS DOCUMENT IS PRIVATE AND CONFIDENTIAL AND IS SUPPLIED ON THE EXPRESS CONDITION THAT IT IS NOT TO BE USED FOR ANY PURPOSE OR COPIED OR COMMUNICATED TO ANY OTHER PERSON WITHOUT WRITTEN PERMISSION FROM DART AEROSPACE LTD.

No.	Characteristic	Inspection Method	Limit
4	Mechanical damage on one spot face	Measure	For a mechanical damage of <=0.040 inch (1.02 mm), remove the depth of the damage. Do not remove more than 0.040 inch (1.02 mm) from the cross hatched area.
5	Mechanical damage to the lug hole (not the bushing hole)	Measure	For a mechanical damage depth of <=0.020 inch (0.51 mm), uniformly remove the depth of the damage around the periphery of the hole. Do not remove more than 0.020 inch (0.51 mm) from any part of the lug hole surface. Maintain original lug hole centerline. Be-bush hole.
6	Mechanical damage to the bushing hole		Not allowed. Replace bushing.

Figure 53-10. Tail Rotor Gearbox Support Fitting - Damage and Corrosion Limits (Sheet 3 of 3)

• COPYRIGHT © 2007 BY DART AEROSPACE LTD. •
THIS DOCUMENT IS PRIVATE AND CONFIDENTIAL AND IS SUPPLIED ON THE EXPRESS CONDITION THAT IT IS NOT TO BE USED FOR ANY PURPOSE OR COPIED OR COMMUNICATED TO ANY OTHER PERSON WITHOUT WRITTEN PERMISSION FROM DART AEROSPACE LTD.

CHAPTER 62
MAIN ROTOR
(62-00-00)

REFER TO
BHT-212-MM

• COPYRIGHT © 2007 BY DART AEROSPACE LTD. •
THIS DOCUMENT IS PRIVATE AND CONFIDENTIAL AND IS SUPPLIED ON THE EXPRESS CONDITION THAT IT IS NOT TO BE USED FOR ANY PURPOSE OR COPIED OR COMMUNICATED TO ANY OTHER PERSON WITHOUT WRITTEN PERMISSION FROM DART AEROSPACE LTD.

CHAPTER 63
MAIN ROTOR DRIVE SYSTEM
(63-00-00)

• COPYRIGHT © 2007 BY DART AEROSPACE LTD. •
THIS DOCUMENT IS PRIVATE AND CONFIDENTIAL AND IS SUPPLIED ON THE EXPRESS CONDITION THAT IT IS NOT TO BE USED FOR ANY PURPOSE OR COPIED OR COMMUNICATED TO ANY OTHER PERSON WITHOUT WRITTEN PERMISSION FROM DART AEROSPACE LTD.

CHAPTER 63 – MAIN ROTOR DRIVE SYSTEM (63-00-00)

TABLE OF CONTENTS

Table of Contents 2
63.1 Main Rotor Drive System 6
63.1.1 Main Rotor Drive System 6
63.1.2 Metal Particle Contamination 6
63.2 Main Driveshaft 12
63.2.1 Main Driveshaft 12
63.2.2 Engine Driveshaft Adapter 13
63.3 Main Rotor Mast 17
63.3.1 Main Rotor Mast 17
63.3.2 Maintenance 17
63.4 Transmission 22
63.4.1 Transmission 22
63.4.2 Buildup 22
63.4.3 Troubleshooting 23
63.4.4 Troubleshooting Transmission Oil System. 25
63.4.5 Maintenance 32
63.5 Transmission Oil System Components 38
63.5.1 Transmission Oil System 38
63.5.2 Transmission Oil Pressure Relief Valve 40
63.5.3 Transmission Oil Pump 44
63.5.4 Transmission Mast Bearing Electric Chip Detector (Transmissions 212-040-001-059 and Subsequent and Transmissions modified by T.B. 212-80-35) 46
63.5.5 Transmission Main Input Gear Quill Electric Chip Detector (Transmission 212-040-001-059 and Subsequent and Transmissions modified by T.B. 212-80-35) 46
63.5.6 Transmission Sump Case Electric Chip Detector 51
63.5.7 Transmission Oil Sump Filter 54
63.5.8 Full Flow Debris Monitor 57
63.5.9 Transmission External Oil Filter 60
63.5.10 Transmission Planetary Oil Jets 62
63.5.11 Transmission Oil Jet No. 1 64
63.5.12 Transmission Oil Jet No. 2 66
63.5.13 Transmission Oil Jet No. 3 68
63.5.14 Transmission Oil Jet No. 4 70
63.5.15 Transmission Oil Jet No. 5 72
63.5.16 Transmission Oil Jet No. 6 74
63.5.17 Transmission Oil Jet No. 7 76
63.5.18 Transmission Oil Pump Screen 78
63.5.19 Oil Temperature Manifold 80
63.5.20 Oil Pressure Transmitter 82
63.5.21 Oil Pressure Switch 84
63.5.22 Oil Pressure Manifold 86
63.5.23 Filler Neck, Scupper and Mounting Bracket 88
63.5.24 Transmission Sight Glasses 90
63.6 Transmission Oil Cooling System 92
63.6.1 Transmission Oil Cooling System 92
63.6.2 Oil Cooler Blower 93
63.6.3 Quick Threading Couplings 93
63.6.4 Transmission Oil System Tubes and Hoses 95

• COPYRIGHT © 2007 BY DART AEROSPACE LTD. •
THIS DOCUMENT IS PRIVATE AND CONFIDENTIAL AND IS SUPPLIED ON THE EXPRESS CONDITION THAT IT IS NOT TO BE USED FOR ANY PURPOSE OR COPIED OR COMMUNICATED TO ANY OTHER PERSON WITHOUT WRITTEN PERMISSION FROM DART AEROSPACE LTD.

63.7 Transmission Quills 96
63.7.1 Transmission Quills 96
63.7.2 Tail Rotor Drive Quill 96
63.7.3 Input Drive Quill 100
63.7.4 Input Drive Quill Seal 104
63.7.5 Hydraulic Pump and Tachometer Drive Quill 108
63.7.6 No. 2 Hydraulic Pump Drive Quill 113
63.7.7 Rotor Brake Quill 115
63.8 Transmission Quill Port Covers 118
63.9 Transmission Mounts 120
63.9.1 Pylon Mounts 120
63.9.2 Maintenance 120
63.9.3 Friction Dampers 125
63.9.4 Lift Link 125
63.10 Serviceability Checks 127
63.11 Rotor Brake System 128
63.11.1 Rotor Brake System Troubleshooting 128
63.11.2 Bleeding 129
63.11.3 Bleeding - Brake Assembly P/N 9450103 129
63.11.4 Bleeding - Brake Assembly P/N 9450103-1 129
63.12 Rotor Brake System components 130
63.12.1 Master Cylinder - Removal 130
63.12.2 Master Cylinder - Inspection 130
63.12.3 Master Cylinder - Repair 130
63.12.3 Master Cylinder - Installation 130
63.12.4 Brake Assembly - Removal (P/N 9450103) 130
63.12.5 Brake Assembly - Removal (P/N 9450103-1) 131
63.12.6 Brake Assembly - Inspection 131
63.12.7 Brake Assembly - Repair 131
63.12.8 Brake Assembly - Installation (P/N 9450103) 132
63.12.9 Brake Assembly - Installation (P/N 9450103-1) 133
63.12.10 Rotor Brake Disc - Removal 133
63.12.11 Rotor Brake Disc - Inspection 134
63.12.12 Rotor Brake Disc - Installation 134
63.12.13 Flange Adapter - Removal 135
63.12.14 Flange Adapter - Installation 135

LIST OF FIGURES

Figure 63-1. Power Train System 6
Figure 63-2. Metal Particle Identification and Disposition (Sheet 1 of 3) 9
Figure 63-2. Metal Particle Identification and Disposition (Sheet 2 of 3) 10
Figure 63-2. Metal Particle Identification and Disposition (Sheet 3 of 3) 11
Figure 63-3. Main Driveshaft Assembly (204-040-433-101) 14
Figure 63-4. Main Driveshaft Installation and Removal Tool 15
Figure 63-5. Workaid Tool Installed on Main Driveshaft 15
Figure 63-6. Main Driveshaft Damage Limits 16
Figure 63-7. Mast Assembly 20

• COPYRIGHT © 2007 BY DART AEROSPACE LTD. •
THIS DOCUMENT IS PRIVATE AND CONFIDENTIAL AND IS SUPPLIED ON THE EXPRESS CONDITION THAT IT IS NOT TO BE USED FOR ANY PURPOSE OR COPIED OR COMMUNICATED TO ANY OTHER PERSON WITHOUT WRITTEN PERMISSION FROM DART AEROSPACE LTD.

Figure 63-8. Dimensional Check before Installing Mast 21
Figure 63-9. Transmission 27
Figure 63-10. Transmission Build up (Sheet 1 of 4) 28
Figure 63-10. Transmission Build up (Sheet 2 of 4) 29
Figure 63-10. Transmission Build up (Sheet 3 of 4) 30
Figure 63-10. Transmission Build up (Sheet 4 of 4) 31
Figure 63-11. Transmission Mounting Hardware 37
Figure 63-12. Transmission Oil System Schematic 39
Figure 63-13. Transmission Oil System (Sheet 1 of 2) 41
Figure 63-13. Transmission Oil System (Sheet 2 of 2) 42
Figure 63-14. Oil Pressure Relief Valve 43
Figure 63-15. Transmission Oil Pump 45
Figure 63-16. Mast Bearing Electric Chip Detector 48
Figure 63-17. Damage Limits – Electric Chip Detector (Typical) 49
Figure 63-18. Main Input Quill Electric Chip Detector 50
Figure 63-19. Sump Case Electric Chip Detector 52
Figure 63-20. Damage Limits – Sump Case Electric Chip Detector 53
Figure 63-21. Sump Internal Filter (pre TB 212-91-131) 56
Figure 63-22. Sump Internal Filter 57
Figure 63-23. Damage Limits Sump Internal Filter` 55
Figure 63-24. Full Flow Debris Monitor 59
Figure 63-25. Transmission External Oil Filter 61
Figure 63-26. Planetary Oil Jet 63
Figure 63-27. Transmission Oil Jet No. 1 65
Figure 63-28. Transmission Oil Jet No. 2 67
Figure 63-29. Transmission Oil Jet No. 3 69
Figure 63-30. Transmission Oil Jet No. 4 71
Figure 63-31. Transmission Oil Jet No. 5 73
Figure 63-32. Transmission Oil Jet No. 6 75
Figure 63-33. Transmission Oil Jet No. 7 77
Figure 63-34. Transmission Oil Pump Screen 79
Figure 63-35. Damage Limits – Oil Pump Inlet Screen 79
Figure 63-36. Oil Temperature Manifold 81
Figure 63-37. Transmission Oil Pressure Transmitter 83
Figure 63-38. Transmission Oil Switch 85
Figure 63-39. Oil Pressure Manifold 87
Figure 63-40. Filler Neck, Scupper and Mounting Bracket 89
Figure 63-41. Transmission Sight Glass 91
Figure 63-42. Tail Rotor Drive Quill 99
Figure 63-43. Input Drive Quill Work Aid 101
Figure 63-44. Work Aid for Lubrication of Tail Rotor Drive Coupling 102
Figure 63-45. Input Drive Quill (205-040-263-003) 103
Figure 63-46. Input Quill Seal Wear Sleeve Work Aid 106
Figure 63-47. Input Drive Quill (205-040-263-101) 107
Figure 63-48. No. 1 Hydraulic Pump and Rotor Tachometer Drive Quill 111
Figure 63-49. No. 1 Hydraulic System and Rotor Tachometer Drive Quill Assembly 112
Figure 63-50. No. 2 Hydraulic Pump Drive Quill 114
Figure 63-51. Rotor Brake Quill 117
Figure 63-52. Quill Port Covers 119
Figure 63-53. Transmission Pylon Mounts (Sheet 1 of 2) 122

• COPYRIGHT © 2007 BY DART AEROSPACE LTD. •
THIS DOCUMENT IS PRIVATE AND CONFIDENTIAL AND IS SUPPLIED ON THE EXPRESS CONDITION THAT IT IS NOT TO BE USED FOR ANY PURPOSE OR COPIED OR COMMUNICATED TO ANY OTHER PERSON WITHOUT WRITTEN PERMISSION FROM DART AEROSPACE LTD.

Figure 63-54. Transmission Pylon Mounts (Sheet 2 of 2) 123
Figure 63-55. Isolation Mount Test Fixture 124
Figure 63-56. Rotor Brake Assembly (Sheet 1 of 2) 136
Figure 63-56. Rotor Brake Assembly (Sheet 2 of 2) 137
Figure 63-57. Rotor Brake Assembly (Sheet 1 of 3) 138
Figure 63-57. Rotor Brake Assembly (Sheet 2 of 3) 139
Figure 63-57. Rotor Brake Assembly (Sheet 3 of 3) 140
Figure 63-58. Rotor Brake Assembly - Damage Limits (Sheet 1 of 2) 141
Figure 63-58. Rotor Brake Assembly - Damage Limits (Sheet 2 of 2) 142
Figure 63-59. Rotor Brake Disc 143
Figure 63-60. Rotor Brake Disc Inspection Arbor 144

LIST OF TABLES

Table 63-1. Transmission Oil System Troubleshooting 23
Table 63-2. Values for Inspection of Quick Threading Couplings 95
Table 63-3. Rotor Brake System - Troubleshooting 128

• COPYRIGHT © 2007 BY DART AEROSPACE LTD. •
THIS DOCUMENT IS PRIVATE AND CONFIDENTIAL AND IS SUPPLIED ON THE EXPRESS CONDITION THAT IT IS NOT TO BE USED FOR ANY PURPOSE OR COPIED OR COMMUNICATED TO ANY OTHER PERSON WITHOUT WRITTEN PERMISSION FROM DART AEROSPACE LTD.

CHAPTER 63 – MAIN ROTOR DRIVE SYSTEM (63-00-00)

63.1 MAIN ROTOR DRIVE SYSTEM

63.1.1 Main Rotor Drive System

This Chapter contains maintenance information for the drive system components (Figure 63-1) which transmit power from the engine to the main rotor assembly and to transmission mounted accessories. This includes the engine-to-transmission (main) driveshaft, transmission and related components, and main rotor mast assembly.

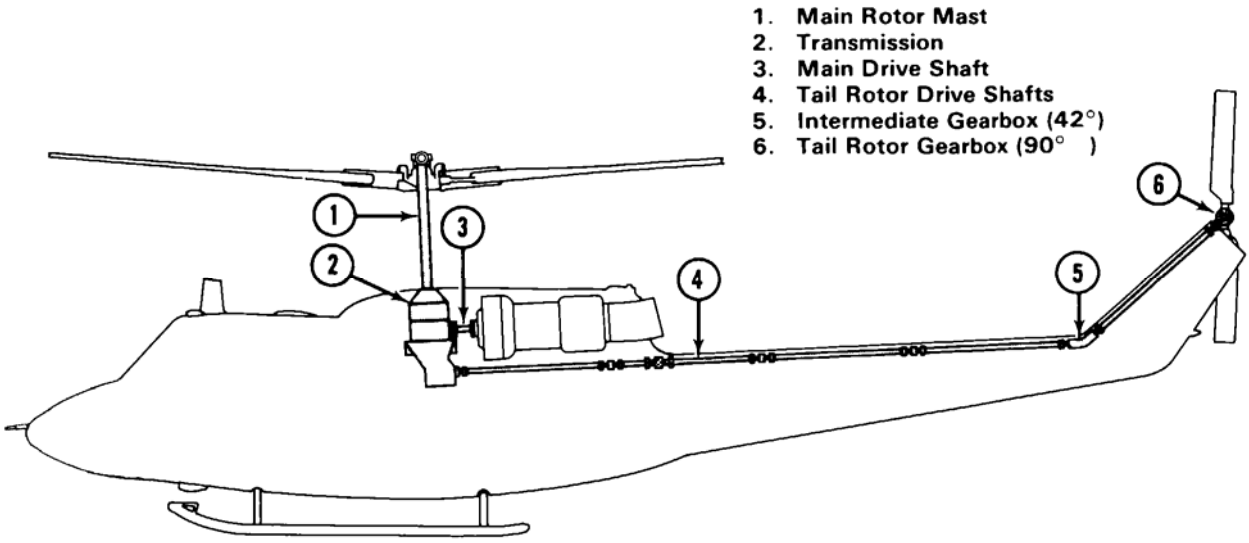

Figure 63-1. Power Train System

63.1.2 Metal Particle Contamination

Metal particles found on oil strainer screens, oil filters or chip detectors may indicate failure of an internal part of the component. The presence of metal particles however, is not necessarily an indication the component is no longer serviceable. The quantity, source, form, type of metal found, together with service history of the particular component, must be taken into consideration. The time accumulated since the component was new or overhauled, previous failures, and type of operation are important factors in determining further serviceability of the component. The particles found may be steel, cadmium, aluminum, magnesium, copper (bronze), or phenolic in various shapes and quantities. For a detailed explanation of the action made necessary by the presence of various types of particles in the

• COPYRIGHT © 2007 BY DART AEROSPACE LTD. •
THIS DOCUMENT IS PRIVATE AND CONFIDENTIAL AND IS SUPPLIED ON THE EXPRESS CONDITION THAT IT IS NOT TO BE USED FOR ANY PURPOSE OR COPIED OR COMMUNICATED TO ANY OTHER PERSON WITHOUT WRITTEN PERMISSION FROM DART AEROSPACE LTD.

component, see Figure 63-2.

63.1.2.1 Identification

MATERIALS REQUIRED

Refer to BHT-ALL-SPM for specification and source.

NUMBER	NOMENCLATURE
C-431	Hydrochloric Acid (Muriatic)
C-432	Nitric Acid

CAUTION

WHEN ANY PARTICLES FOUND ARE READILY IDENTIFIABLE AS FRAGMENTS OF COMPONENT PARTS, SUCH AS GEARS, NUTS, BEARINGS, WASHERS, SNAP-RINGS, LOCKWIRE, OR OTHER COMPONENTS, REPLACE TRANSMISSION OR GEARBOX, MAST ASSEMBLY, OIL COOLER, AND EXTERNAL OIL FILTER ELEMENTS. CLEAN ALL OIL LINES.

A visual inspection of color and a hardness check will occasionally suffice to identify the particles. When visual inspection does not positively identify the particle, the kind of particle present may be determined by a few simple tests. Equipment to perform tests includes a permanent magnet, concentrated hydrochloric (muriatic) acid (C-431), and concentrated nitric acid (C-432). Proceed as follows:

63.1.2.1.1 STEEL: Isolate steel particles with permanent magnet.

63.1.2.1.2 ALUMINUM: Determine aluminum particles by their reaction to hydrochloric acid. When a particle of aluminum is dropped into hydrochloric acid it will fizz with a rapid emission of bubbles. The particles will gradually disintegrate and form a black residue.

NOTE

Magnesium and aluminum react similarly in hydrochloric acid. When in doubt, drop particle into nitric acid. Aluminum does not react noticeably in nitric acid.

63.1.2.1.3 COPPER or BRONZE and MAGNESIUM:
Differentiate copper or bronze and magnesium by their respective reactions to nitric acid. When a particle of copper bronze is dropped into nitric acid a bright green cloud will form in the acid. When a particle of magnesium is dropped into nitric acid it fizzes with a rapid emission of bubbles. Phenolic and aluminum do not react noticeably to nitric acid.

• COPYRIGHT © 2007 BY DART AEROSPACE LTD. •
THIS DOCUMENT IS PRIVATE AND CONFIDENTIAL AND IS SUPPLIED ON THE EXPRESS CONDITION THAT IT IS NOT TO BE USED FOR ANY PURPOSE OR COPIED OR COMMUNICATED TO ANY OTHER PERSON WITHOUT WRITTEN PERMISSION FROM DART AEROSPACE LTD.

The information contained in this figure is provided for the evaluation of contamination found on the drive system chip detectors.

It is impossible to depict the shapes of all possible particulate contamination, especially those particles not generated within a gearbox, as a result of component wear or failure. However, the following basic assumptions will permit a rather accurate assessment of any debris found, even though the particles may be severely distorted as a result of passing through gear meshes

63.1.2.2 Description:

63.1.2.2.1 Material, from the surfaces of gear teeth or rolling element bearings is quite hard. Particles broken from these surfaces may have razor-sharp edges but rarely have sharp pointed ends. With few exceptions, surfaces of such particles will not appear smeared (as if cut by a shear) under magnification; a grainy appearance on the fracture surfaces is more common.

When damaged by passing through gear meshes, these hard particles tend to breakup with relatively little deformation.

63.1.2.2.2 Foreign ferrous material introduced into gearboxes is often much softer than the surfaces of gear teeth and bearings. The same is true of most non-gear and nonbearing components within gearboxes. The softer materials are usually quite ductile and malleable, i.e., particles from such materials can be readily bent or rolled into a wide range of shapes without fracturing.

Fragments of the softer material are capable of being torn or sheared from the parent component without suffering brittle fracture (easily broken or snapped). Instead, during separation the fragments are distorted and stretched such that they often exhibit surfaces that appear stretched. Ends of soft material fragments are often sharp-pointed; the ductile nature of the material permits such a condition.

Each type of debris has been identified as significant debris or insignificant debris at the beginning of the explanation of significance to aid in troubleshooting. Recurring accumulation of insignificant debris will require overhaul/repair of gearbox.

• COPYRIGHT © 2007 BY DART AEROSPACE LTD. •
THIS DOCUMENT IS PRIVATE AND CONFIDENTIAL AND IS SUPPLIED ON THE EXPRESS CONDITION THAT IT IS NOT TO BE USED FOR ANY PURPOSE OR COPIED OR COMMUNICATED TO ANY OTHER PERSON WITHOUT WRITTEN PERMISSION FROM DART AEROSPACE LTD.

TYPICAL APPEARANCE	DESCRIPTION	SIGNIFICANCE
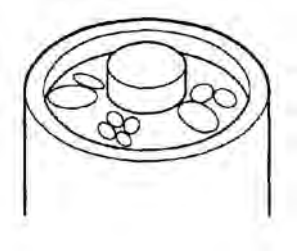	A few moderately-sized and/or numerous small nearly-flat flakes: Under magnification one side of flakes appears very smooth. Flakes are silvery in color with an occasional black side. Common term for this condition is flakes.	(SIGNIFICANT DEBRIS) This is a classic indication of rolling element bearing failure. Although less common, this can also indicate spalling of gear teeth. Overhaul/Repair Gearbox
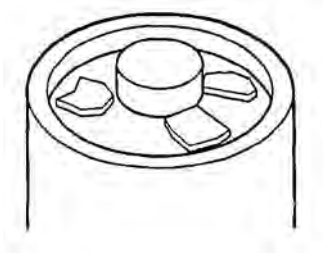	Irregularly-shaped ferrous chunks of various sizes and shapes: Under magnification one or more sides of particles appears rough and grainy. Color of particles is silvery-gray often with one or more sides black. This condition has no common term.	(SIGNIFICANT DEBRIS) Existence of this type of debris most likely indicates gear and/or bearing damage within the drive system component. Overhaul/Repair Gearbox

Figure 63-2. Metal Particle Identification and Disposition (Sheet 1 of 3)

• COPYRIGHT © 2007 BY DART AEROSPACE LTD. •
THIS DOCUMENT IS PRIVATE AND CONFIDENTIAL AND IS SUPPLIED ON THE EXPRESS CONDITION THAT IT IS NOT TO BE USED FOR ANY PURPOSE OR COPIED OR COMMUNICATED TO ANY OTHER PERSON WITHOUT WRITTEN PERMISSION FROM DART AEROSPACE LTD.

TYPICAL APPEARANCE	DESCRIPTION	SIGNIFICANCE
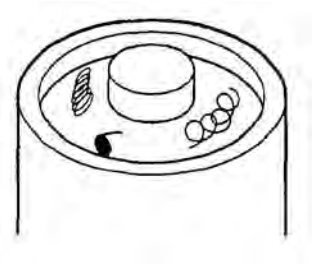	Spiral curls or comma-shaped particles: When examined under magnification, particles are often smooth and shiny on their convex surfaces and quite rough on the other surfaces and edges. Color of particles is usually dull gray on rough surfaces, Common term for condition is manufacturing debris.	(INSIGNIFICANT DEBRIS) Particles are fragments of chips or shavings produced during the machining of ferrous components. Such contamination is often introduced into the drive system components on tools, during dusting operations within the component assembly area using compressed air. No corrective action is required following discovery of such material. Recheck detector daily for 25 hours.
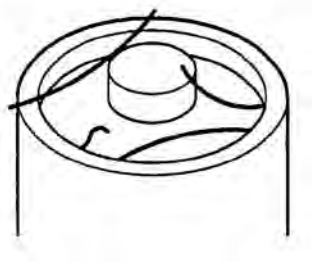	Hair-like ferrous debris: May have rectangular or triangular cross sections. Generally 0.030 inch or less in thickness. Length may range from 0.100 inch to over 1.000 inch. Color of debris is usually light gray although one or more sides may have a black appearance. Common term for condition is hairs.	(INSIGNIFICANT DEBRIS) Debris commonly are scrapings, produced as components are interference-fitted together during assembly of the drive system component. Debris of this general shape is also produced, after long term operation, at the corners of wearing surfaces of such parts as transmission planetary supports. This type debris can be introduced into the component during periodic servicing. Hairs can appear on chip detectors at any point in the life of the drive system component. However, discovery of such material does not necessitate any corrective action. Recheck detector daily for next 25 hours.

Figure 63-2. Metal Particle Identification and Disposition (Sheet 2 of 3)

• COPYRIGHT © 2007 BY DART AEROSPACE LTD. •
THIS DOCUMENT IS PRIVATE AND CONFIDENTIAL AND IS SUPPLIED ON THE EXPRESS CONDITION THAT IT IS NOT TO BE USED FOR ANY PURPOSE OR COPIED OR COMMUNICATED TO ANY OTHER PERSON WITHOUT WRITTEN PERMISSION FROM DART AEROSPACE LTD.

TYPICAL APPEARANCE	DESCRIPTION	SIGNIFICANCE
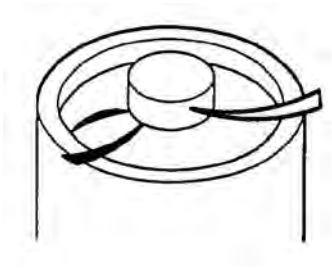	Irregular-shaped ferrous particles: Usually triangular in cross sections. Often spiked-like in appearance. Under magnification, one side of triangular section will usually appear sheared. Color may be silvery-gray or black with one or more silver sides. Existence of two or more particles of this type on a chip detector at any one time is rare. Common term for condition is manufacturing debris.	(INSIGNIFICANT DEBRIS) Particles of this type are commonly the result of tool slippage during assembly of the drive system component. An example would be the sliver of metal torn from the edge of a screw slot as a screwdriver blade slips out of place. This type of debris would most likely appear during the first 50 hours of operation following component assembly or extensive maintenance. No corrective actions are required following discovery of such material. Recheck detector daily for next 25 hours.
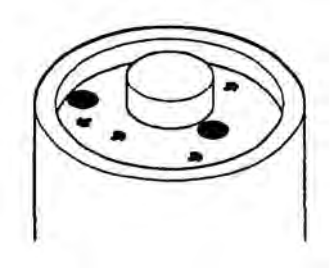	Tiny whisker-like particles or groups of dark microscopic particles: When removed with tape or paper towel, apparently-large chips disappear into a black smudge. Common term for condition is smudge or fuzz.	(INSIGNIFICANT DEBRIS) Generally microscopic wear particles produced by normal wear within drive system component. Particles are often grouped by the field of the chip detector magnet to assume the shape of apparently large chips. Such material is common in gearboxes having several hundred operating hours. In such cases, this condition does not necessitate corrective action. Appearance of this type of debris in relatively new or recently-overhauled gearboxes may indicate bearing or gear micropitting. In such cases detector should be inspected more frequently for signs of progressing damage. Recheck daily for next 25 hours.

Figure 63-2. Metal Particle Identification and Disposition (Sheet 3 of 3)

• COPYRIGHT © 2007 BY DART AEROSPACE LTD. •
THIS DOCUMENT IS PRIVATE AND CONFIDENTIAL AND IS SUPPLIED ON THE EXPRESS CONDITION THAT IT IS NOT TO BE USED FOR ANY PURPOSE OR COPIED OR COMMUNICATED TO ANY OTHER PERSON WITHOUT WRITTEN PERMISSION FROM DART AEROSPACE LTD.

63.2 MAIN DRIVESHAFT

63.2.1 Main Driveshaft

A main driveshaft with crowned tooth couplings is installed between an adapter on the engine output shaft and the freewheeling coupling of the transmission input drive quill. Two coupling clamp sets, of split V-band type, hold mating curvic faces of couplings in secure contact. Flexibility of couplings is provided by elastic deformation of metallic flex plates, to accommodate movement of transmission on pylon mounts.

63.2.1.1 Removal – Main Driveshaft (204-040-433-101)

63.2.1.1.1 Open cowling on each side of pylon and remove screen.

CAUTION

COUPLING CLAMPS SHALL BE KEPT TOGETHER AS A MATCHED SET; FAILURE TO DO SO MAY CAUSE A SEVERE UNBALANCE AND A HIGH-FREQUENCY VIBRATION.

63.2.1.1.2 Remove coupling clamps (4, Figure 63-3) at each end of driveshaft, keep clamps together as matched sets after removal.

CAUTION

DO NOT APPLY ANY TOOLS OR CLAMPS TO COUPLING PLATES.

NOTE

Compression of shaft is usually necessary to clear the engine adapter and transmission freewheeling unit.

To prevent critical damage to plates and/or shaft, locally obtain and make two installation and removal clamp work aids (Figure 63-4).

63.2.1.1.3 Position two installation clamp work aids over bolt heads located on the arms of the end fittings (Figure 63-5). Tighten clamps to allow removal of shaft. Remove shaft assembly. Remove clamp work aids.

63.2.1.1.4 If required, remove engine driveshaft adapter in accordance with paragraph 63.2.2.1.

63.2.1.2 Cleaning – Main Driveshaft

63.2.1.2.1 Clean shaft assembly, adapter, and attaching parts with solvent (C-304) or MEK (C-309).

63.2.1.2.2 Dry with filtered compressed air or clean cloth.

63.2.1.3 Inspection – Main Driveshaft

CAUTION

DO NOT ATTEMPT TO LOOSEN OR TIGHTEN ANY HARDWARE ON DRIVESHAFT ASSEMBLY. ANY REASON FOR PART REMOVAL IS CAUSE FOR SHAFT REPLACEMENT.

NOTE

Black residue developing around the flex plates is not a cause for rejecting the driveshaft.

63.2.1.3.1 Inspect internal fail-safe diameters for evidence of contact (detail A, Figure 63-3). If contact is noticed, driveshaft must be replaced.

63.2.1.3.2 Visually inspect driveshaft for obvious mechanical damage, flexplate looseness, corrosion, and/or fretting at flexplate bolted joints. Refer to Figure 63-6 for damage limits. Repair in accordance with BHT-205A1-CR&O-1 manual.

63.2.1.4 Installation – Main Driveshaft

NOTE

Driveshaft assembly may be installed with either end to engine.

• COPYRIGHT © 2007 BY DART AEROSPACE LTD. •
THIS DOCUMENT IS PRIVATE AND CONFIDENTIAL AND IS SUPPLIED ON THE EXPRESS CONDITION THAT IT IS NOT TO BE USED FOR ANY PURPOSE OR COPIED OR COMMUNICATED TO ANY OTHER PERSON WITHOUT WRITTEN PERMISSION FROM DART AEROSPACE LTD.

Refer to paragraph 63.2.2.1 for engine driveshaft adapter installation procedures.

63.2.1.4.1 Position two installation clamp work aids over bolt heads located on arms of the end fitting (Figure 63-5). Tighten clamps to allow installation of shaft between engine adapter and transmission freewheeling unit. Install main driveshaft in either direction. Remove both clamp work aids from shaft after installation.

63.2.1.4.2 Install coupling clamps (4, Figure 63-3) to secure both ends of shaft as follows:

63.2.1.4.2.1 Check the serial numbers on each clamp set, ensuring both halves are alike and on the same side for installation.

NOTE
Clamp halves should fit snugly and hold themselves in place without bolts.

63.2.1.4.2.2 Place washer (2, Figure 63-3) on bolt (1) with chamfer against head. Install bolt, with head in direction of shaft rotation, through pivots (3) and clamp ends. Install steel washer (5), thin steel washer (6), and nut (7).

NOTE
Thick or thin steel washers maybe added if required under nut, using like quantity on opposite bolt to maintain balance.

63.2.1.4.2.3 Torque nut (7) 100 to 130 inch-pounds, keeping equal gaps between ends of clamp set within 0.030 inch. Tap around outside of clamp set with a soft-faced mallet to ensure good seating. Recheck bolt torque. Install cotter pin (8).

63.2.1.4.2.4 Install opposite end clamp set, in the same manner, positioned 90 degrees around shaft in relation to previously installed clamp set.

63.2.1.4.3 Install screen and close cowling on both sides of pylon.

63.2.2 Engine Driveshaft Adapter

63.2.2.1 Replacement – Engine Driveshaft Adapter

63.2.2.1.1 To remove adapter (12, Figure 63-3):

63.2.2.1.1.1 Cut lockwire, bend tang on key washer (11, Figure 63-3) and remove retaining bolt (10).

63.2.2.1.1.2 Pull adapter (12) from engine forward end.

63.2.2.1.2 To install adapter (12):

63.2.2.1.2.1 Apply corrosion preventive compound (C-104) to spline and insert adapter (12) into engine shaft. Install retaining bolt (10) and key washer (11) with short tab of washer in adapter slot.

63.2.2.1.2.2 Use a strap wrench to hold adapter (12) and torque retaining bolt (10) 160 to 200 inch-pounds. Lockwire bolt head to outer tab of key washer (12).

63.2.2.1.2.3 On engine driveshaft adapter (12) with 204-040-813-101 retaining bolt (10) and 204-040-814-001 washer (11) torque to 360 to 400 inch-pounds.

• COPYRIGHT © 2007 BY DART AEROSPACE LTD. •
THIS DOCUMENT IS PRIVATE AND CONFIDENTIAL AND IS SUPPLIED ON THE EXPRESS CONDITION THAT IT IS NOT TO BE USED FOR ANY PURPOSE OR COPIED OR COMMUNICATED TO ANY OTHER PERSON WITHOUT WRITTEN PERMISSION FROM DART AEROSPACE LTD.

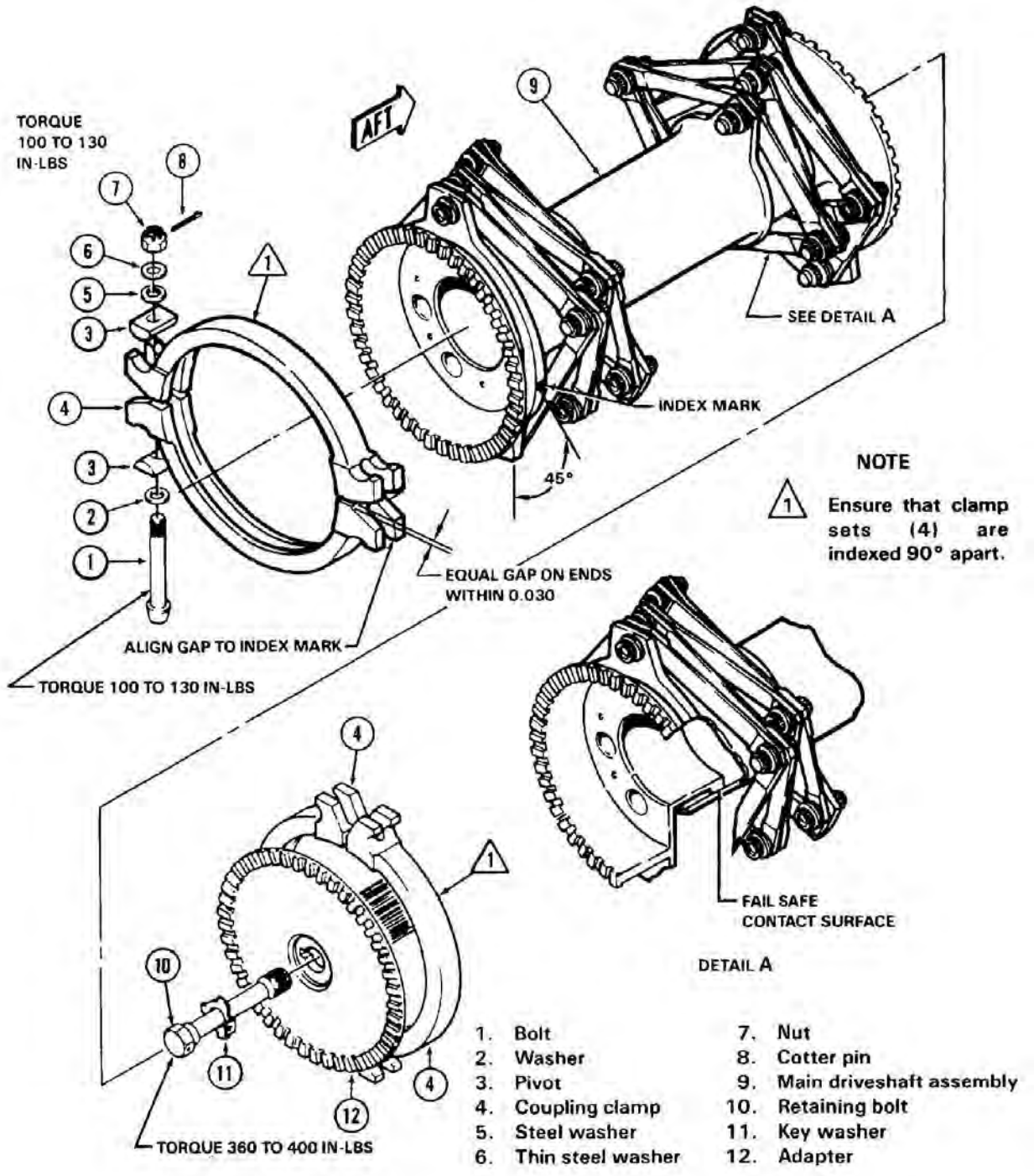

Figure 63-3. Main Driveshaft Assembly (204-040-433-101)

• COPYRIGHT © 2007 BY DART AEROSPACE LTD. •
THIS DOCUMENT IS PRIVATE AND CONFIDENTIAL AND IS SUPPLIED ON THE EXPRESS CONDITION THAT IT IS NOT TO BE USED FOR ANY PURPOSE OR COPIED OR COMMUNICATED TO ANY OTHER PERSON WITHOUT WRITTEN PERMISSION FROM DART AEROSPACE LTD.

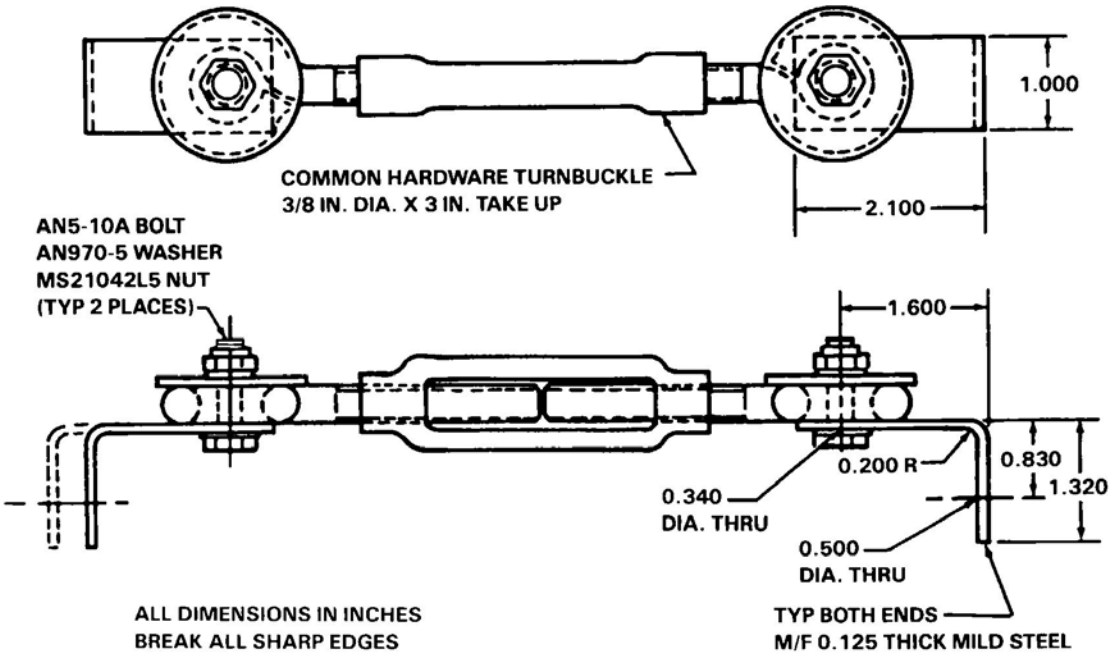

Figure 63-4. Main Driveshaft Installation and Removal Tool

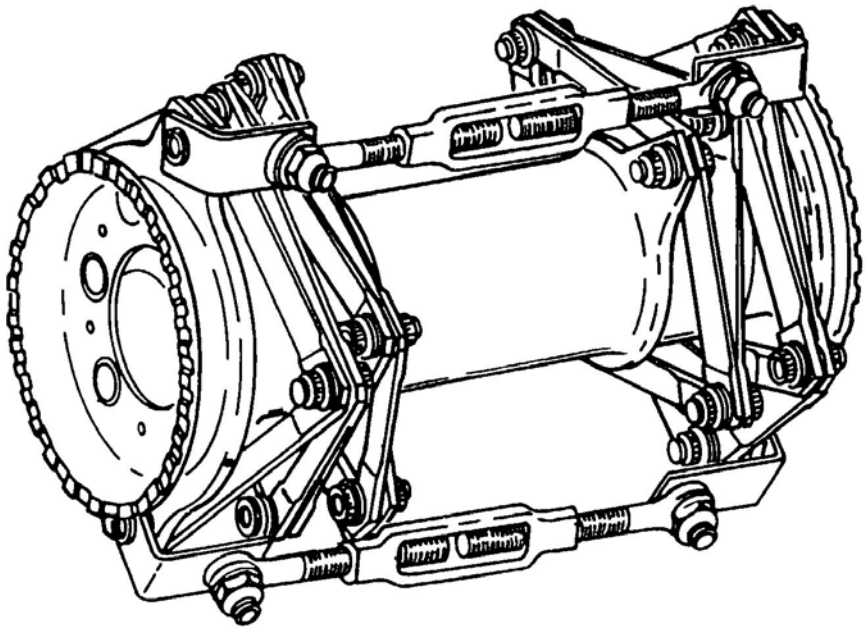

Figure 63-5. Workaid Tool Installed on Main Driveshaft

• COPYRIGHT © 2007 BY DART AEROSPACE LTD. •
THIS DOCUMENT IS PRIVATE AND CONFIDENTIAL AND IS SUPPLIED ON THE EXPRESS CONDITION THAT IT IS NOT TO BE USED FOR ANY PURPOSE OR COPIED OR COMMUNICATED TO ANY OTHER PERSON WITHOUT WRITTEN PERMISSION FROM DART AEROSPACE LTD.

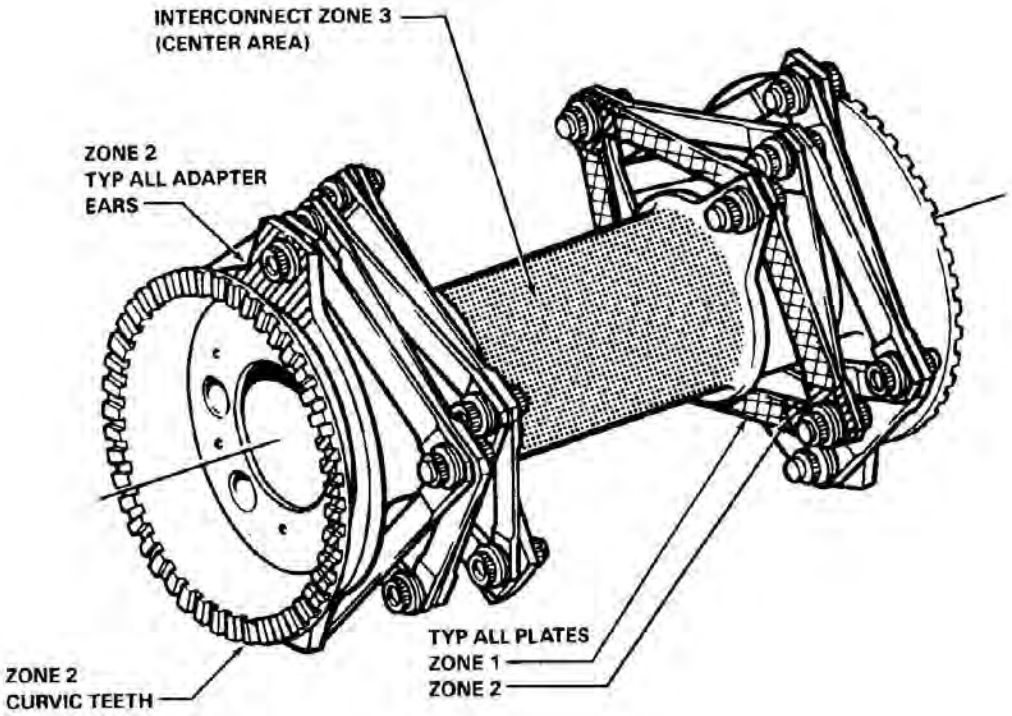

DAMAGE AREA REPAIR SYMBOLS

TYPE OF DAMAGE	ZONE 1	ZONE 2 THICK SECTION	ZONE 3	ZONE 4
NICKS, SCRATCHES, CORROSION	0.002	0.005	0.010	0.015
EDGE DENTS, NICKS	0.005	0.010	N/A	0.025
MAXIMUM AREA PER	0.05 Sq.	0.10 In. Sq.	Not critical (local area only)	
NUMBER OF REPAIRS	2 Max per plate 1-inch minimum separation	one per lug one per plate	Not critical (not to overlap)	

Figure 63-6. Main Driveshaft Damage Limits

• COPYRIGHT © 2007 BY DART AEROSPACE LTD. •
THIS DOCUMENT IS PRIVATE AND CONFIDENTIAL AND IS SUPPLIED ON THE EXPRESS CONDITION THAT IT IS NOT TO BE USED FOR ANY PURPOSE OR COPIED OR COMMUNICATED TO ANY OTHER PERSON WITHOUT WRITTEN PERMISSION FROM DART AEROSPACE LTD.

CHAPTER 63 – MAIN ROTOR DRIVE SYSTEM (63-00-00)

63.3 MAIN ROTOR MAST

63.3.1 Main Rotor Mast

The main rotor mast assembly is a tubular steel shaft fitted with a bearing and a race which mates into a roller bearing in the transmission. Driving splines engage with transmission upper planetary gear assembly, providing counterclockwise rotation as viewed from above. Splines on upper portion of mast provide mounting for main rotor and rotating controls.

63.3.2 Maintenance

63.3.2.1 Removal

SPECIAL TOOLS REQUIRED

NUMBER	NOMENCLATURE
T101581	Maintenance hoist or equivalent
204-011-178-001	Clevis
204-040-929-029 or 204-040-929-101	Cover and Lift Plate Assembly

63.3.2.1.1 Open transmission cowling.

63.3.2.1.2 Erect maintenance hoist, T101581, or equivalent.

63.3.2.1.3 Remove main rotor hub and blade assembly (Chapter 62).

63.3.2.1.4 Remove hub and sleeve assembly (Chapter 62).

63.3.2.1.5 Remove swashplate and support assembly (Chapter 62).

63.3.2.1.6 Reinstall mast nut (1, Figure 63-7) on top of mast (2). Attach clevis, 204-011-178-001 or equivalent, to nut. Attach hoist, T101581, to clevis.

63.3.2.1.7 Remove nuts and washers from transmission around retainer plate of upper bearing assembly (3).

63.3.2.1.8 Disconnect oil hose (6) from jet on retainer plate. Cap jet and open end of hose.

63.3.2.1.9 Remove sealant from around base of retainer plate using a sharp, non-metallic scraper.

NOTE

Heating transmission top case with a heat lamp will aid in removal of mast.

63.3.2.1.10 Carefully lift and guide mast assembly out of transmission (5). Immediately install a cover on transmission.

CAUTION

IF TRANSMISSION IS TO BE TRANSPORTED, COVER AND LIFT PLATE ASSEMBLY (204-040-929-029 OR 204-040-929-101) MUST BE INSTALLED

63.3.2.1.11 Place mast assembly on a padded stand. Place protective covering over bearing.

CAUTION

LEAVE MAST NUT INSTALLED TO PROTECT THREADS.

63.3.2.1.12 Remove lifting clevis.

63.3.2.2 Inspection and repair

MATERIALS REQUIRED

Refer to BHT-ALL-SPM for specification and source.

NUMBER	NOMENCLATURE
C-417	Inhibitor

63.3.2.2.1 Visually inspect area of mast which might be contacted by main rotor hub. Any evidence of deformation by such contact is cause to replace mast and send damaged assembly to overhaul.

63.3.2.2.2 Inspect exposed areas of mast above upper bearing for surface damage. Minor

• COPYRIGHT © 2007 BY DART AEROSPACE LTD. •
THIS DOCUMENT IS PRIVATE AND CONFIDENTIAL AND IS SUPPLIED ON THE EXPRESS CONDITION THAT IT IS NOT TO BE USED FOR ANY PURPOSE OR COPIED OR COMMUNICATED TO ANY OTHER PERSON WITHOUT WRITTEN PERMISSION FROM DART AEROSPACE LTD.

nicks, scratches, and corrosion may be polished out, provided cleanup does not exceed 0.005 inch (0.127 mm) depth and is blended into surrounding surface. Protect repaired area with inhibitor (C-417) (BHT-ALL-SPM).

63.3.2.2.3 Replace mast assembly if surface damage exceeds limits (BHT-212-CR&O) or if there are indications of unserviceable bearing condition due to corrosion, unusual wear, or bearing failure.

63.3.2.2.4 Seepage of oil through drain hole of upper bearing assembly (3, Figure 63-7) may be due to an unserviceable mast bearing oil seal.

63.3.2.3 Installation

MATERIALS REQUIRED

Refer to BHT-ALL-SPM for specification and source.

NUMBER	NOMENCLATURE
C-308	Adhesive

SPECIAL TOOLS REQUIRED

NUMBER	NOMENCLATURE
T101581	Maintenance hoist or equivalent
204-011-178-001	Clevis

CAUTION

BEFORE INSTALLING MAST, PERFORM DIMENSIONAL CHECK OF TRANSMISSION TO PRECLUDE POSSIBILITY OF DAMAGE TO PLANETARY ASSEMBLIES DURING MAST INSTALLATION.

63.3.2.3.1 If installed, remove cover plate from transmission.

63.3.2.3.2 Perform dimensional check of transmission as follows:

63.3.2.3.2.1 Place a straight edge on top case of transmission. Measure from top surface of mast adapter in transmission to straight edge and record dimension (Figure 63-8).

63.3.2.3.2.2 If dimension is less than 2.570 inches (65.278 mm), examine upper and lower planetary support liners to determine if tangs of upper liner are disengaged from mating slots in lower liner.

WARNING

USE CARE IN HANDLING PARTS TO AVOID POSSIBLE INJURY TO FINGERS.

63.3.2.3.2.3 If tangs are disengaged, gap between the two liners would be approximately 0.25 inch (6.35 mm). If gap is this large, re-index these two liners by inserting hands, backs together, through mast driving adapter.

63.3.2.3.2.4 Lift adapter slightly and rotate upper liner until tangs are correctly engaged in slots.

63.3.2.3.2.5 Recheck dimensions from top of adapter to straight edge placed across top case opening.

63.3.2.3.2.6 Ensure mast assembly is clean and bearings are serviceable and properly secured.

63.3.2.3.2.7 Verify cotter pins do not interfere with rear lower aluminum guide race, and nut (1, Figure 63-7) is installed on top of mast.

63.3.2.3.3 Attach T101581 hoist, or equivalent to mast nut using clevis, 204-011-178-001. Lift mast to position over transmission (5).

NOTE

Heating top case of transmission with a heat lamp will aid in installation

63.3.2.3.4 Apply a thin coating of adhesive (C-308) to lower mating surface of retainer plate and transmission top case.

63.3.2.3.5 Lower mast carefully into transmission, guiding lower end into bearing retainer plate to position indicated by FWD arrow marking before plate engages on mounting studs

• COPYRIGHT © 2007 BY DART AEROSPACE LTD. •
THIS DOCUMENT IS PRIVATE AND CONFIDENTIAL AND IS SUPPLIED ON THE EXPRESS CONDITION THAT IT IS NOT TO BE USED FOR ANY PURPOSE OR COPIED OR COMMUNICATED TO ANY OTHER PERSON WITHOUT WRITTEN PERMISSION FROM DART AEROSPACE LTD.

on transmission.

63.3.2.3.6 Install aluminum washer, a thin steel washer, and a nut on each of ten mounting studs. Torque nuts 100 to 140 inch-lbs. (11.30 to 15.82 Nm).

63.3.2.3.7 Connect oil hose (6) from transmission to No. 8 jet on mast bearing retainer plate.

63.3.2.3.8 Rotate transmission input quill, by hand, to make sure there is no unusual noise or evidence of binding.

63.3.2.3.9 Remove clevis and install swashplate and support, scissors and sleeve, dampers and supports, main rotor hub and blade assembly, and stabilizer bar assemblies (Chapter 62).

• COPYRIGHT © 2007 BY DART AEROSPACE LTD. •
THIS DOCUMENT IS PRIVATE AND CONFIDENTIAL AND IS SUPPLIED ON THE EXPRESS CONDITION THAT IT IS NOT TO BE USED FOR ANY PURPOSE OR COPIED OR COMMUNICATED TO ANY OTHER PERSON WITHOUT WRITTEN PERMISSION FROM DART AEROSPACE LTD.

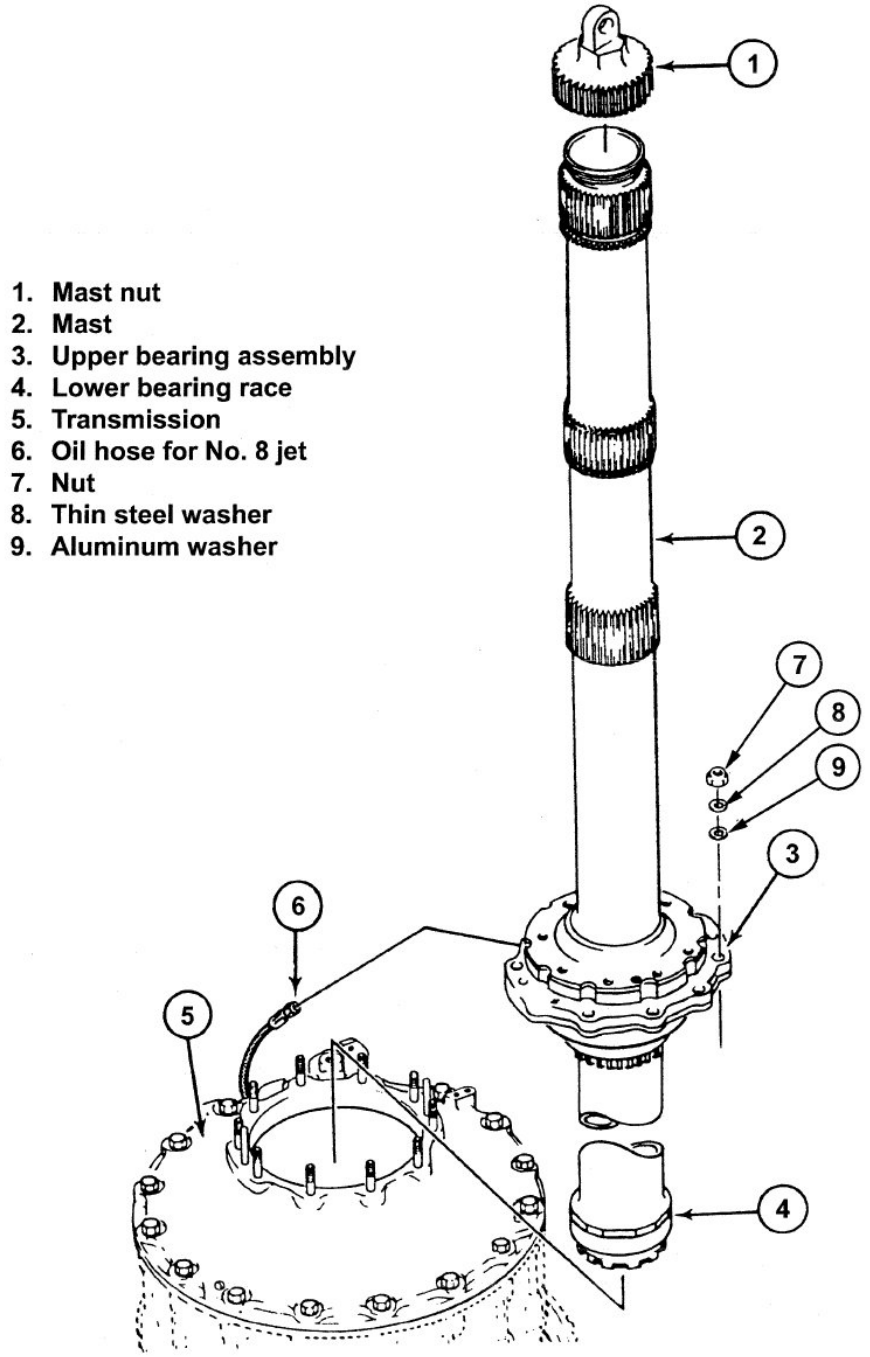

Figure 63-7. Mast Assembly

• COPYRIGHT © 2007 BY DART AEROSPACE LTD. •
THIS DOCUMENT IS PRIVATE AND CONFIDENTIAL AND IS SUPPLIED ON THE EXPRESS CONDITION THAT IT IS NOT TO BE USED FOR ANY PURPOSE OR COPIED OR COMMUNICATED TO ANY OTHER PERSON WITHOUT WRITTEN PERMISSION FROM DART AEROSPACE LTD.

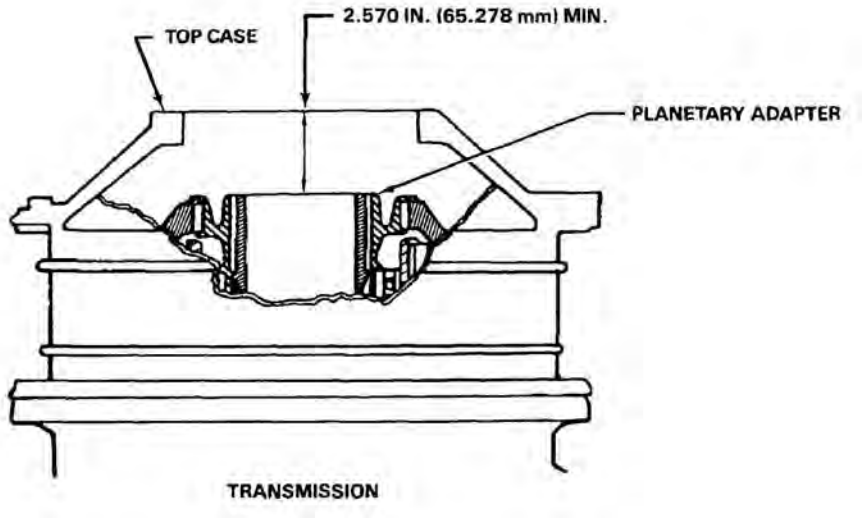

Figure 63-8. Dimensional Check before Installing Mast

• COPYRIGHT © 2007 BY DART AEROSPACE LTD. •
THIS DOCUMENT IS PRIVATE AND CONFIDENTIAL AND IS SUPPLIED ON THE EXPRESS CONDITION THAT IT IS NOT TO BE USED FOR ANY PURPOSE OR COPIED OR COMMUNICATED TO ANY OTHER PERSON WITHOUT WRITTEN PERMISSION FROM DART AEROSPACE LTD.

63.4 TRANSMISSION

63.4.1 Transmission

The transmission (Figure 63-9) is a mechanical reduction gearbox, attached on the fuselage structure by a lift link and five vibration-isolating mounts, and is lubricated by its oil system. The main driveshaft directly connects the engine to the transmission input drive quill. Within the transmission, spiral bevel gears and two stages of planetary gears accomplish speed reduction, and drive the main rotor mast, which is mounted through the top of the transmission. Other gear trains drive the oil pump and the output quills for the rotor brake disc, the tail rotor driveshaft, and the hydraulic pumps and rotor tachometer generator. No mechanical or electrical controls are required for the main rotor drive; operation is automatic and continuous while driven by the engine. Electrical circuits are provided for oil temperature and pressure indicators and caution lights, for main rotor rpm indicator and warning system, and for chip detector test lights for the transmission (Figure 63-10).

63.4.2 Buildup

MATERIALS REQUIRED

Refer to BHT-ALL-SPM for specification and source.

NUMBER	NOMENCLATURE
C-405	Lockwire

SPECIAL TOOLS REQUIRED	
NUMBER	**NOMENCLATURE**
T101581	Hoist
SWE13875	Stand
SWE13875-60	Adapter
SWE13832-21	Mount Assembly
204-040-929-101	Cover, lift plate

63.4.2.1 Install adapter. SWE13875-60 and mount assembly, SWE13832-21 on stand, SWE13875.

63.4.2.2 Install cover and lift plate (3, Figure 63-10) on transmission using washers (2) and nuts (1).

63.4.2.3 Remove transmission from shipping container and position on stand, SWE13875. Secure transmission to stand with bolts.

63.4.2.4 If transmission is to be installed in helicopter immediately, open drain valve (8) and allow all preservative oil to drain. Close valve (8)

CAUTION

IF ANY OIL LINES FROM A TRANSMISSION WHICH WAS REMOVED DUE TO INTERNAL FAILURE OR METAL CONTAMINATION ARE TO BE INSTALLED ON REPLACEMENT TRANSMISSION, ENSURE ALL FOREIGN PARTICLES ARE CLEANED FROM HOSES. MAST ASSEMBLIES FROM TRANSMISSIONS DESCRIBED ABOVE SHALL BE OVERHAULED PRIOR TO FURTHER USE.

NOTE

If components from transmission removed from helicopter are to be used for buildup of replacement transmission, position transmissions near each other to facilitate transfer of components.

63.4.2.5 Install mast in transmission (paragraph 63.3.2.3).

63.4.2.6 Remove cover (14) and install system 2 hydraulic pump (Chapter 29). Cap or plug open ports on hydraulic line.

NOTE

System 1 hydraulic pump will be installed after transmission is installed in helicopter. Leave cover (26) installed at this time.

63.4.2.7 Remove cover (10) and install tachometer generator (19) (paragraph 63.7.5.5).

63.4.2.8 Remove plug (24) and packing (23). Install oil pressure transmitter (40) and packing (39) (paragraph 63.5.21.2).

• COPYRIGHT © 2007 BY DART AEROSPACE LTD. •
THIS DOCUMENT IS PRIVATE AND CONFIDENTIAL AND IS SUPPLIED ON THE EXPRESS CONDITION THAT IT IS NOT TO BE USED FOR ANY PURPOSE OR COPIED OR COMMUNICATED TO ANY OTHER PERSON WITHOUT WRITTEN PERMISSION FROM DART AEROSPACE LTD.

63.4.2.9 Remove cap (22). Install oil pressure switch (36) and packing (38) (paragraph 63.5.22).

NOTE
Refer to Chapter 98 for electrical wiring diagrams to confirm wire numbers.

63.4.2.10 Install electrical harness (32) as follows:

63.4.2.10.1 Connect electrical connector (42) to pressure switch (36).

63.4.2.10.2 Connect electrical connector (41) to pressure transmitter (40).

63.4.2.10.3 Connect ground wire to connector (33).

63.4.2.10.4 Install six clamps (30) (remaining four are installed in step 63.4.2.10.8 below).

63.4.2.10.5 Remove cover (21). Install electrical terminal and nipple (35) on thermoswitch (25).

63.4.2.10.6 For transmissions 212-040-001-059 and subsequent, and transmissions modified by T.B. 212-80-35, connect terminal and nipple (37) to main input gear quill chip detector (7) (paragraph 63.5.6.3).

63.4.2.10.7 For transmissions 212-040-001-059 and subsequent, and transmissions modified by TB. 212-80-35, connect terminal and nipple (34) to mast bearing chip detector (4) (paragraph 63.5.5.4).

63.4.2.10.8 Install four clamps (30) (six clamps installed in step 63.4.2.2.10.4. above).

63.4.2.10.9 Install terminal and nipple (29) on sump chip detector (27).

63.4.2.10.10 Install connector (28) on tachometer generator (19) and secure with lockwire (C-405).

63.4.2.10.11 If transmission is to be installed in a helicopter equipped with a rotor brake, remove cover (6) and install rotor brake quill.

63.4.2.10.12 Install caps, covers, and plugs removed in preceding steps on transmission removed from helicopter.

63.4.3 Troubleshooting

For troubleshooting the transmission and transmission oil supply system, refer to Table 63-1 and paragraph 63.4.4.

Table 63-1. Transmission Oil System Troubleshooting

INDICATION OF TROUBLE	PROBABLE CAUSE	CORRECTIVE ACTION
Transmission oil pressure low.	Fault in pressure gage or caution panel circuits.	Replace faulty electrical components or repair circuit.
	No oil supply.	Check oil level and for evidence of leakage.
		Replace transmission, oil cooler, and external filter element. Flush and repair oil lines.

• COPYRIGHT © 2007 BY DART AEROSPACE LTD. •
THIS DOCUMENT IS PRIVATE AND CONFIDENTIAL AND IS SUPPLIED ON THE EXPRESS CONDITION THAT IT IS NOT TO BE USED FOR ANY PURPOSE OR COPIED OR COMMUNICATED TO ANY OTHER PERSON WITHOUT WRITTEN PERMISSION FROM DART AEROSPACE LTD.

Table 63-1. Transmission Oil System Troubleshooting

INDICATION OF TROUBLE	PROBABLE CAUSE	CORRECTIVE ACTION
	Clogged pump screen.	Drain sump and remove pump screen, check for chips and oil contamination. If existing, also check chip detectors and filters. Clean and reinstall screen. If contamination or evidence of internal failure warrants, replace transmission and cooler, and flush oil lines.
	Faulty oil pump or pressure relief valve	Substitute known, serviceable units, one at a time, to determine which corrects oil pressure in operation. Replace defective part.
	Leak or restriction between pressure relief valve and transmitter.	Inspect transmitter manifold and external tube and connections. Clean and repair or replace faulty connections or tube.
	Faulty quick disconnect coupling	Inspect quick disconnect, coupling for excessive wear. Replace quick disconnect coupling, if defective.
Transmission oil pressure high.	Pressure relief valve malfunction or faulty setting.	Substitute known serviceable valve. If pressure is corrected, replace valve.
	Fault in pressure gage electrical circuit.	Check circuit by electrical system diagram and procedures. Replace defective parts.
Transmission oil temperature high.	Fault in temperature gage or caution panel circuits.	If gage and caution panel do not both show high temperature, check circuits by electrical system diagrams and procedures. Replace faulty electrical component or repair circuit.

• COPYRIGHT © 2007 BY DART AEROSPACE LTD. •
THIS DOCUMENT IS PRIVATE AND CONFIDENTIAL AND IS SUPPLIED ON THE EXPRESS CONDITION THAT IT IS NOT TO BE USED FOR ANY PURPOSE OR COPIED OR COMMUNICATED TO ANY OTHER PERSON WITHOUT WRITTEN PERMISSION FROM DART AEROSPACE LTD.

Table 63-1. Transmission Oil System Troubleshooting

INDICATION OF TROUBLE	PROBABLE CAUSE	CORRECTIVE ACTION
	Obstruction of air flow around transmission or through oil cooler; or blower failure.	Check for any obstruction of area around transmission and cooler. Inspect blower for evidence of damage. Remove obstructing material. Replace blower if defective.
	Restricted oil flow through cooler.	Check external oil filter and lines between transmission and cooler, and for evidence of cooler internal clogging. Clean or replace any clogged or damaged lines or connections. Replace filter element. Replace cooler if internally clogged.
	Internal failure of transmission.	Replace transmission, mast assembly, oil cooler and external oil filter. Flush external lines.
a. Actuates at 230°F (110°C).	Internal failure of transmission.	Replace transmission.
b. 266°F (130°C) maximum (15 minutes maximum).	External reasons (blocked cooler, etc.).	Eliminate external blockage; drain and refill system.

63.4.4 Troubleshooting Transmission Oil System.

NOTE

In analysis of transmission oil system troubles, consider the following characteristics of the system.

63.4.4.1 Low oil level will not cause low oil pressure indications, provided sump contains enough oil to cover pump inlet. However, oil temperature may rise.

63.4.4.2 Effects of an oil leak will depend on location in system and rate of leakage. Do not exceed 10 drops per minute from any single source. Do not exceed a total of 15 drops per minute from all sources on the transmission. An external leak can allow sump to be pumped dry, causing internal failure of transmission. While any oil remains in sump, the pressure relief valve will tend to maintain normal system pressure. This applies especially to leaks between pump and relief valve. Leaks occurring beyond the relief valve could cause indication of low oil pressure. Leaks to interior of transmission will not affect oil level, but may starve downstream lubrication areas and might affect indicated oil pressure and temperature.

• COPYRIGHT © 2007 BY DART AEROSPACE LTD. •
THIS DOCUMENT IS PRIVATE AND CONFIDENTIAL AND IS SUPPLIED ON THE EXPRESS CONDITION THAT IT IS NOT TO BE USED FOR ANY PURPOSE OR COPIED OR COMMUNICATED TO ANY OTHER PERSON WITHOUT WRITTEN PERMISSION FROM DART AEROSPACE LTD.

63.4.4.3 Cumulative clogging of oil filters will not show as a gradual drop in oil pressure indications, because the pressure relief valve maintains normal system pressure. However, the filter in external lines has a visual indicator which will extend when filter bypass conditions are impending, and should be detected in normal inspections.

• COPYRIGHT © 2007 BY DART AEROSPACE LTD. •
THIS DOCUMENT IS PRIVATE AND CONFIDENTIAL AND IS SUPPLIED ON THE EXPRESS CONDITION THAT IT IS NOT TO BE USED FOR ANY PURPOSE OR COPIED OR COMMUNICATED TO ANY OTHER PERSON WITHOUT WRITTEN PERMISSION FROM DART AEROSPACE LTD.

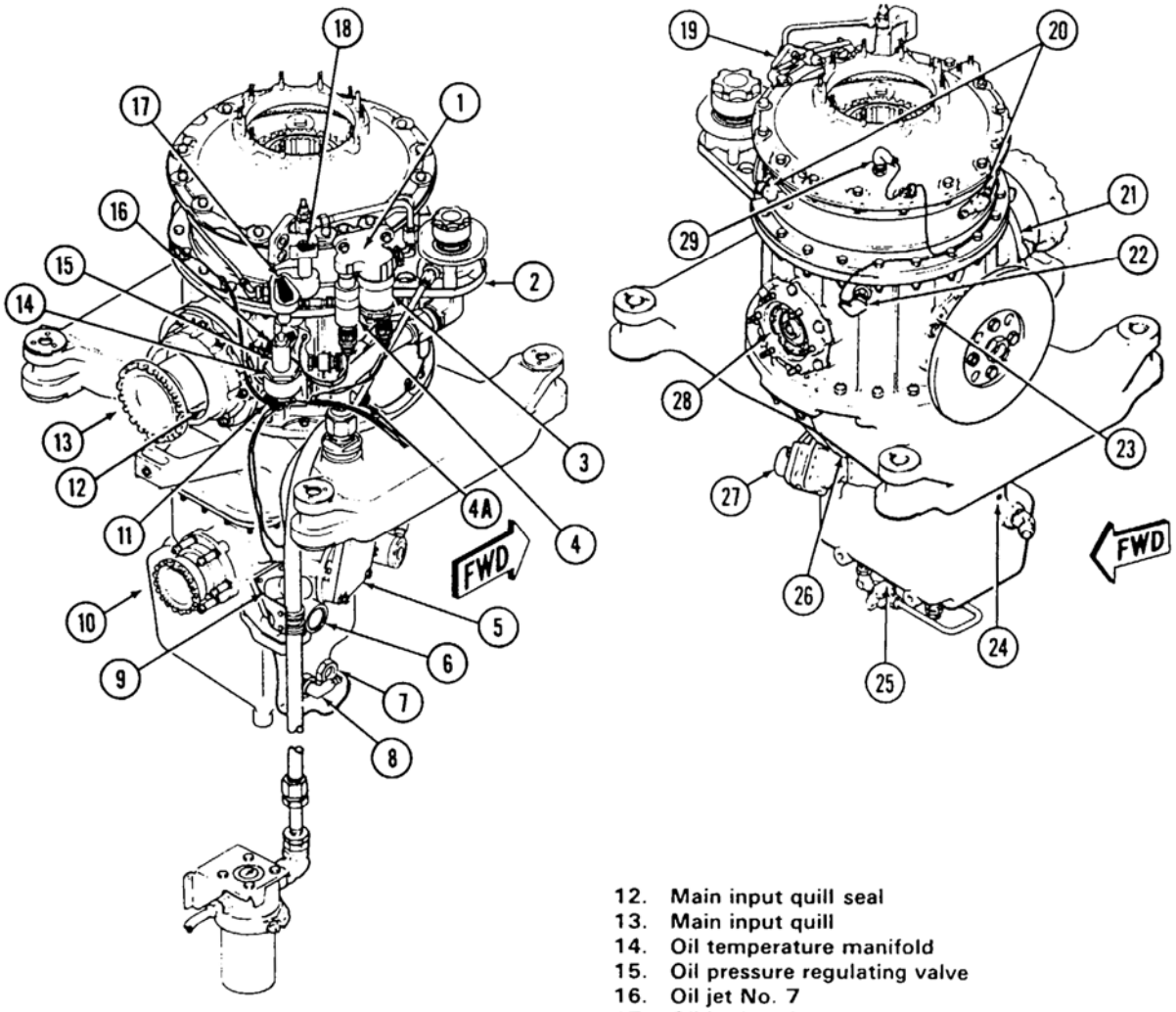

1. Oil pressure manifold
2. Filler neck, scupper, and mounting bracket
3. Oil pressure transmitter
4. Oil pressure switch
4A. Oil jet No. 6
5. No. 1 hydraulic pump drive quill
6. Sight glasses
7. Oil pump inlet screen
8. Sump case electric chip detector
9. Sump internal filter
10. Tail rotor drive quill
11. Oil jet No. 3
12. Main input quill seal
13. Main input quill
14. Oil temperature manifold
15. Oil pressure regulating valve
16. Oil jet No. 7
17. Oil jet No. 2
18. Oil jet No. 1
19. Cyclic controls spring bracket
20. Planetary oil jets
21. Oil jet No. 5
22. Main input gear quill electric chip detector
23. Quill port cover
24. Oil jet No. 4
25. Oil pump
26. Lift link fitting
27. Rotor tachometer generator
28. No. 2 hydraulic pump drive quill
29. Mast bearing electric chip detector

Figure 63-9. Transmission

• COPYRIGHT © 2007 BY DART AEROSPACE LTD. •
THIS DOCUMENT IS PRIVATE AND CONFIDENTIAL AND IS SUPPLIED ON THE EXPRESS CONDITION THAT IT IS NOT TO BE USED FOR ANY PURPOSE OR COPIED OR COMMUNICATED TO ANY OTHER PERSON WITHOUT WRITTEN PERMISSION FROM DART AEROSPACE LTD.

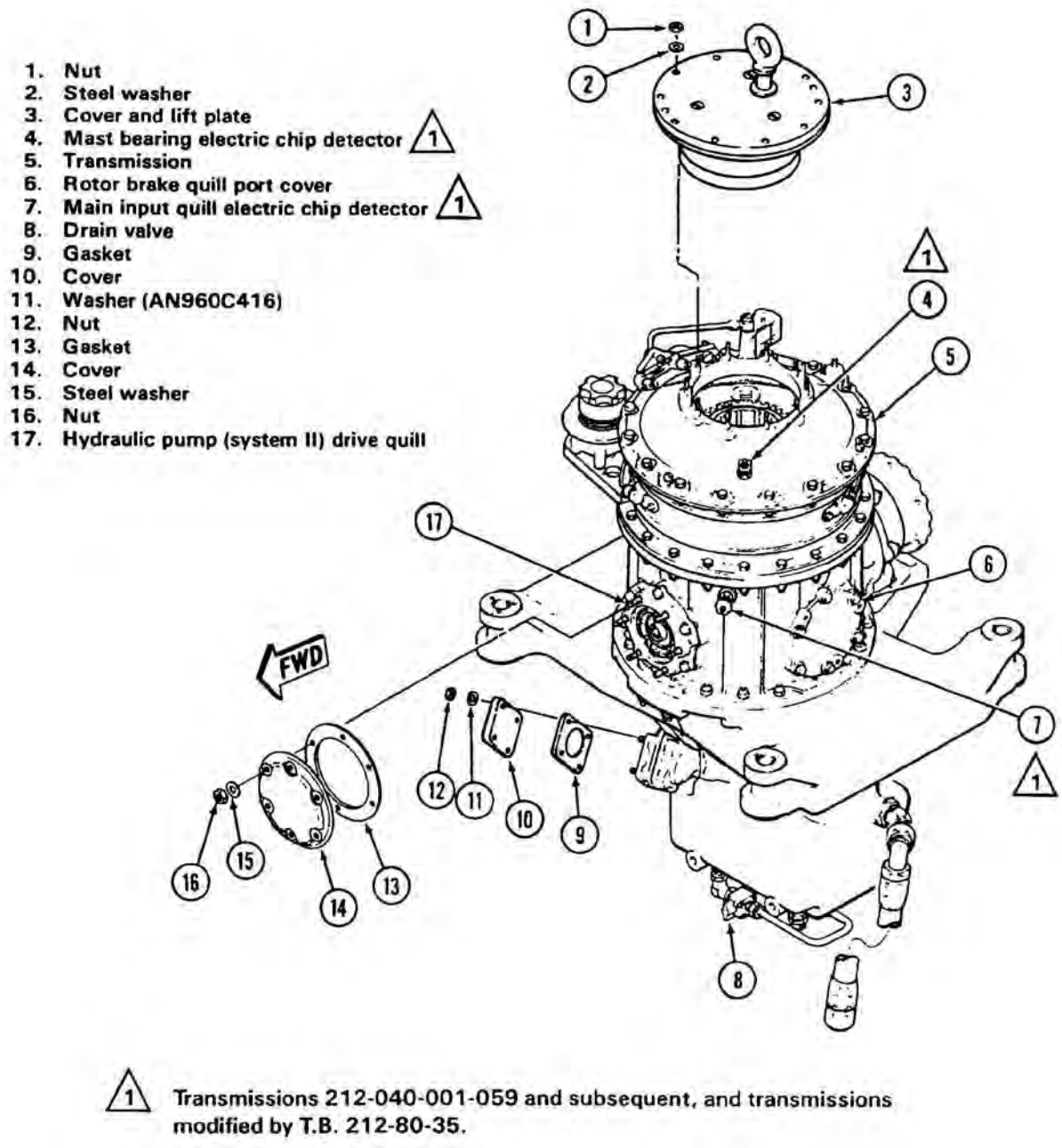

Figure 63-10. Transmission Build up (Sheet 1 of 4)

• COPYRIGHT © 2007 BY DART AEROSPACE LTD. •
THIS DOCUMENT IS PRIVATE AND CONFIDENTIAL AND IS SUPPLIED ON THE EXPRESS CONDITION THAT IT IS NOT TO BE USED FOR ANY PURPOSE OR COPIED OR COMMUNICATED TO ANY OTHER PERSON WITHOUT WRITTEN PERMISSION FROM DART AEROSPACE LTD.

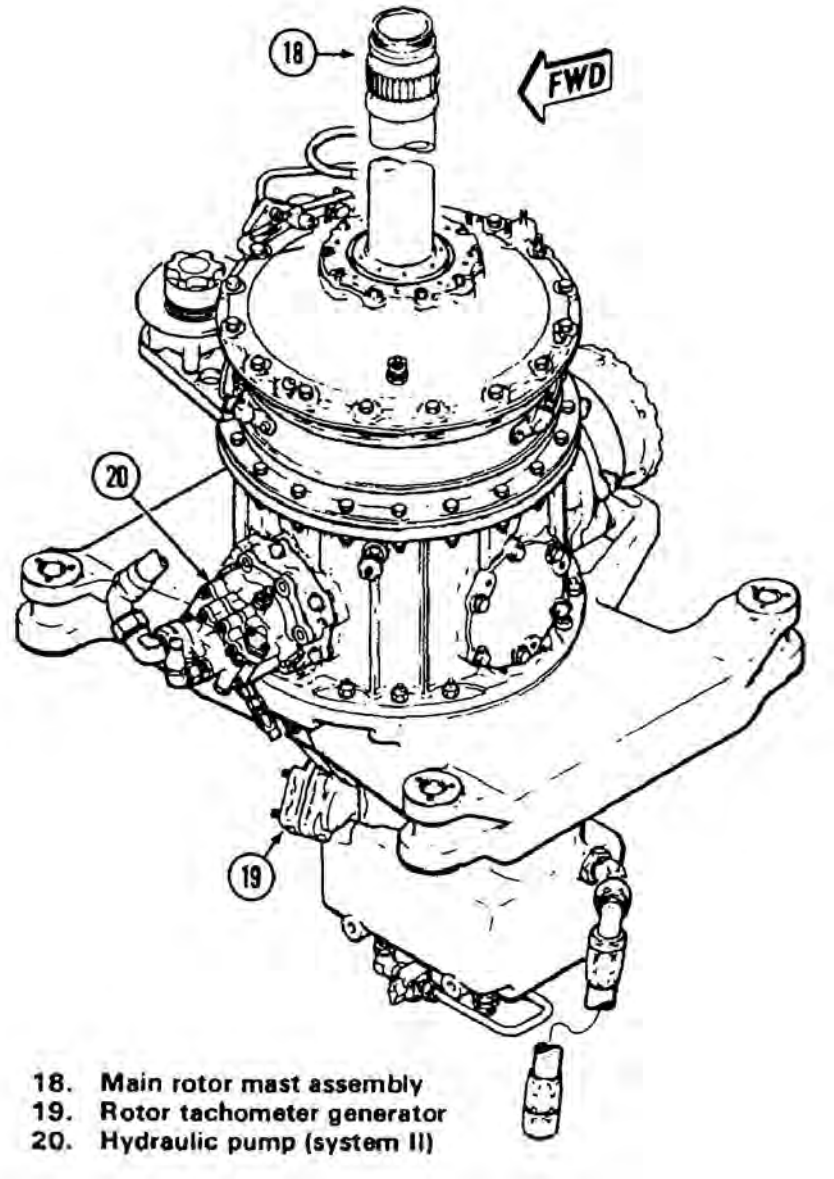

Figure 63-10. Transmission Build up (Sheet 2 of 4)

• COPYRIGHT © 2007 BY DART AEROSPACE LTD. •
THIS DOCUMENT IS PRIVATE AND CONFIDENTIAL AND IS SUPPLIED ON THE EXPRESS CONDITION THAT IT IS NOT TO BE USED FOR ANY PURPOSE OR COPIED OR COMMUNICATED TO ANY OTHER PERSON WITHOUT WRITTEN PERMISSION FROM DART AEROSPACE LTD.

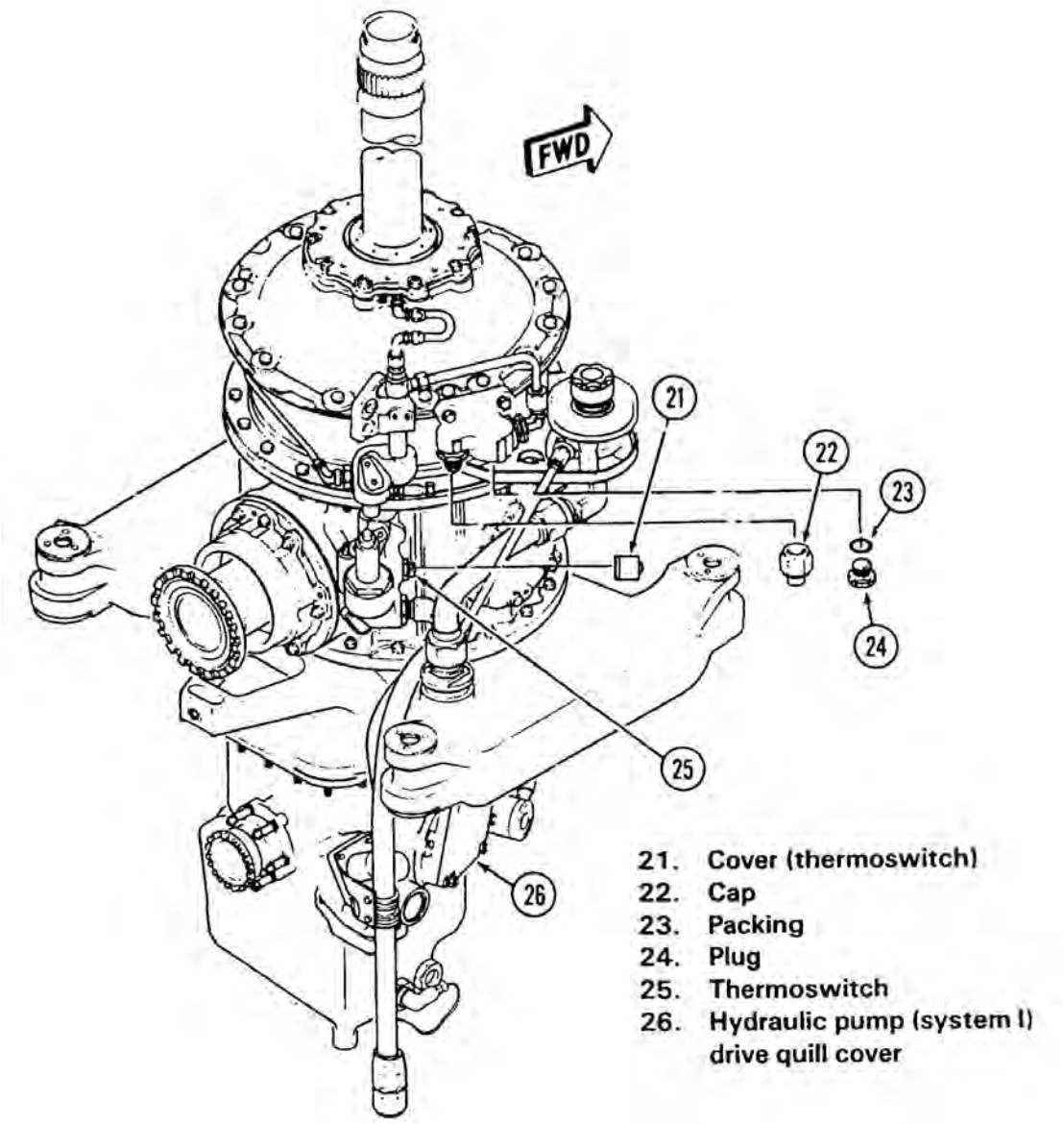

Figure 63-10. Transmission Build up (Sheet 3 of 4)

• COPYRIGHT © 2007 BY DART AEROSPACE LTD. •
THIS DOCUMENT IS PRIVATE AND CONFIDENTIAL AND IS SUPPLIED ON THE EXPRESS CONDITION THAT IT IS NOT TO BE USED FOR ANY PURPOSE OR COPIED OR COMMUNICATED TO ANY OTHER PERSON WITHOUT WRITTEN PERMISSION FROM DART AEROSPACE LTD.

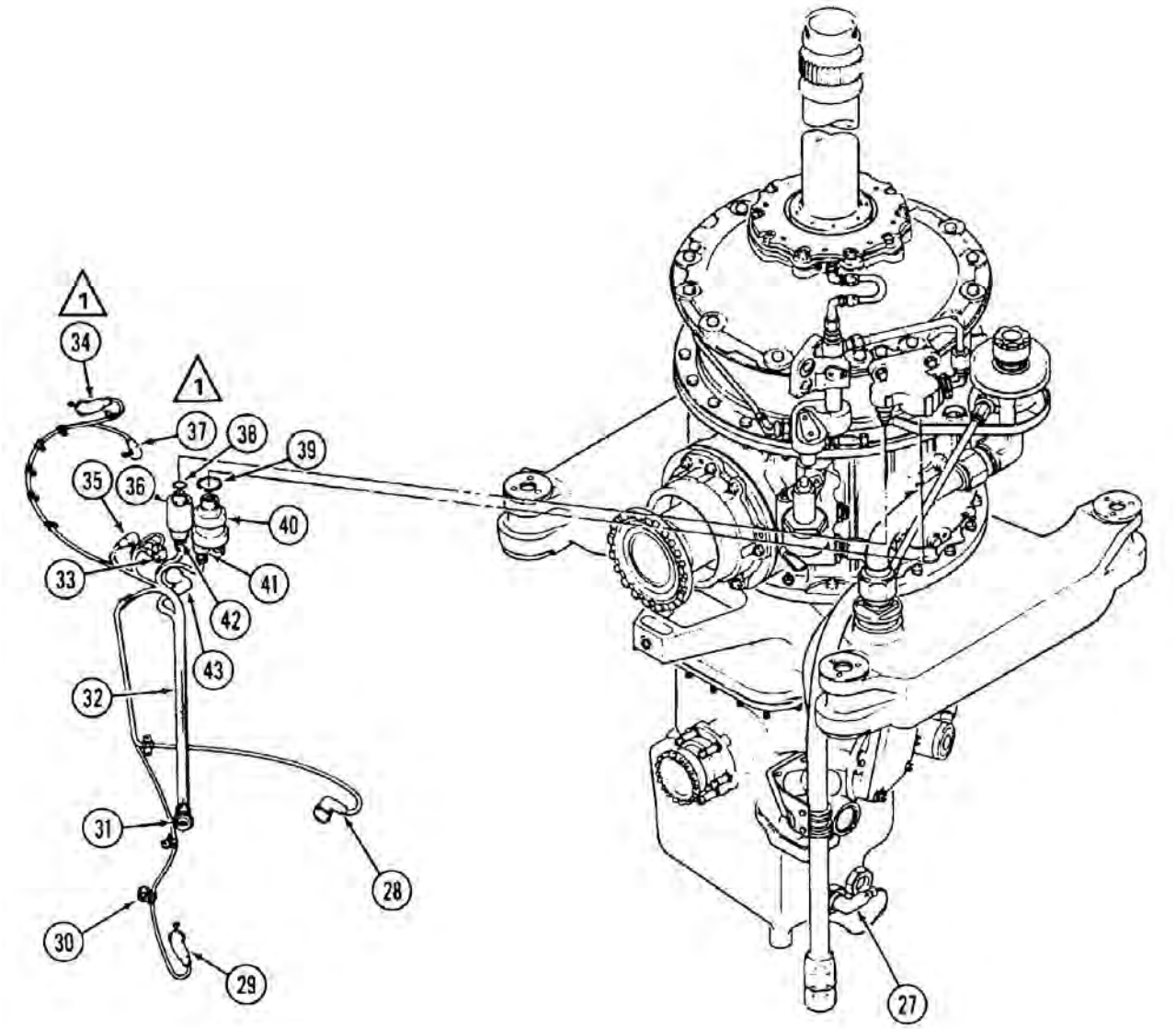

27. Sump electric chip detector
28. Electrical connector
29. Electrical terminal and nipple
30. Clamps (ten)
31. Electrical connector
32. Electrical harness
33. Ground connection
34. Electrical terminal and nipple
35. Electrical terminal and nipple
36. Oil pressure switch
37. Electrical terminal and nipple
38. Packing
39. Packing
40. Oil pressure transmitter
41. Electrical connector
42. Electrical connector
43. Electrical connector

Figure 63-10. Transmission Build up (Sheet 4 of 4)

• COPYRIGHT © 2007 BY DART AEROSPACE LTD. •
THIS DOCUMENT IS PRIVATE AND CONFIDENTIAL AND IS SUPPLIED ON THE EXPRESS CONDITION THAT IT IS NOT TO BE USED FOR ANY PURPOSE OR COPIED OR COMMUNICATED TO ANY OTHER PERSON WITHOUT WRITTEN PERMISSION FROM DART AEROSPACE LTD.

63.4.5 Maintenance

63.4.5.1 Removal

SPECIAL TOOLS REQUIRED

NUMBER	NOMENCLATURE
SWE-13852-20	Stand
T100220	Lifting sling (2)
T101358	Wrench adapter equivalent
T101581	Maintenance hoist equivalent
204-040-929-029 or 204-040-929-101	Cover and Lift Plate Assembly

63.4.5.1.1 When transmission is to be replaced, accomplish preservation by one of the following methods:

63.4.5.1.1.1 If helicopter and transmission are operational, perform a ten minute ground run FMS-D212-725-1 prior to removal of transmission.

63.4.5.1.1.2 If transmission/engine cannot be ground run, accomplish the following:

63.4.5.1.1.2.1 Remove mast assembly (2, Figure 63-7) from transmission (paragraph 63.3.2.1).

63.4.5.1.1.2.2 Spray inside of transmission through top case opening with four quarts of transmission oil (Chapter 12). Rotate gears by hand while spraying oil.

63.4.5.1.1.2.3 Install cover and lift plate assembly (204-040-929-029 or 204-040-929-101) or mast assembly.

63.4.5.1.2 Open and remove cowling, fairings, firewalls and baffles as required for access to transmission, mounts, and driveshafts. In cabin, remove access doors from both sides and front of pylon support.

63.4.5.1.3 Disconnect battery and any external power source. Disconnect transmission electrical harness at connector on right side of pylon support.

63.4.5.1.4 Remove No. 1 hydraulic pump and tachometer generator from drive quill (paragraph 63.7.5.1). Disconnect No. 2 hydraulic pump lines and cap fittings (Chapter 29).

63.4.5.1.5 Remove engine-to-transmission (main) driveshaft (paragraph 63.2.1.1).

63.4.5.1.6 Disconnect forward tail rotor driveshaft at both ends, and move shaft clear of transmission (Chapter 65).

63.4.5.1.7 Drain oil from transmission sump (Chapter 12).

63.4.5.1.8 Disconnect oil outlet and inlet hoses.

63.4.5.1.9 Disconnect oil drain line from sump.

63.4.5.1.10 Disconnect rotor brake hydraulic hoses and electrical wires, if so equipped.

63.4.5.1.11 Erect T101581 maintenance hoist, or equivalent.

CAUTION

BEFORE USING T101581 MAINTENANCE HOIST TO REMOVE OR INSTALL TRANSMISSION, PLACE A SUITABLE SUPPORT UNDER TAILBOOM TO STEADY FUSELAGE IF A TAIL-HEAVY CONDITION OCCURS.

NOTE

For ease of rotating upper tower of maintenance hoist, clean pivot tube and Teflon bushings before each use.

NOTE

Disregard step 63.4.5.1.12 through step 63.4.5.1.14 if mast assembly was removed in step 63.4.5.1.1.2.1.

63.4.5.1.12 Remove main rotor hub and blade assembly (Chapter 62).

• COPYRIGHT © 2007 BY DART AEROSPACE LTD. •
THIS DOCUMENT IS PRIVATE AND CONFIDENTIAL AND IS SUPPLIED ON THE EXPRESS CONDITION THAT IT IS NOT TO BE USED FOR ANY PURPOSE OR COPIED OR COMMUNICATED TO ANY OTHER PERSON WITHOUT WRITTEN PERMISSION FROM DART AEROSPACE LTD.

63.4.5.1.13 Remove stabilizer bar damper and adapter (Chapter 62).

63.4.5.1.14 Remove swashplate and scissors and sleeve (Chapter 62).

NOTE

If mast assembly is not installed, transmission can be hoisted using cover and lift plate assembly (204-040-929-029 or 204-040-929-101).

63.4.5.1.15 Install nut on top of mast, attach hoist and take up cable slack.

63.4.5.1.16 Disconnect lift link from transmission.

63.4.5.1.17 Disconnect fifth mount eyebolt (5, Figure 63-11) from mounting point on aft side of transmission support case by removing bolt assembly (2). Keep attaching parts with mount. Remove bolts at each end of fifth mount support (6) and remove fitting.

63.4.5.1.18 Remove retaining bolt (3), washer, and large shouldered washer (4) from top end of each of four main mount bolts (7) at corners of transmission support case.

63.4.5.1.19 Hoist mast and transmission assembly carefully clear of fuselage structure.

63.4.5.1.20 Place transmission on SWE-13852-20 stand assembly or equivalent. Secure with bolts through main mount points on transmission support case.

63.4.5.1.21 If replacing transmission, remove mast assembly (paragraph 63.3.2.1). Remove no. 2 hydraulic pump (Chapter 29).

63.4.5.1.22 Remove rotor brake assembly, if installed.

CAUTION

IF TRANSMISSION IS TO BE TRANSPORTED, COVER AND LIFT PLATE ASSEMBLY (204-040-929-029 OR 204-040-929-101) MUST BE INSTALLED.

63.4.5.1.23 Install cover plate in transmission top case opening.

63.4.5.2 Inspection

63.4.5.2.1 Remove, inspect, and install all chip detectors (paragraphs 63.5.4, 63.5.5, and 63.5.6).

63.4.5.2.2 Inspect main driveshaft in accordance with 63.2.1.3

63.4.5.2.3 Inspect tail rotor drive quill coupling temperature indicator “TEMP-PLATES” for discoloration from white or light gray to black. A change in color indicates a possible overheat condition and/or component degradation. Cause of discoloration shall be determined and corrected prior to helicopter being released for flight. Refer to Chapter 65 for tail rotor drive quill coupling “TEMP-PLATE” inspection.

63.4.5.2.4 Remove, inspect, and install external oil filter (paragraph 63.5.9).

63.4.5.2.5 Remove, inspect, and install sump internal oil filter (13, Figure 63-15) (paragraph 63.5.7).

63.4.5.2.6 Remove, inspect, and install oil inlet screen (paragraph 63.5.8).

63.4.5.2.7 Inspect oil level sight gage for crazing, cracks, or staining (paragraph 63.5.24.3).

63.4.5.2.8 Inspect transmission case for loose, missing, or damaged studs and bolts.

NOTE

Pay particular attention to attaching bolts for lift link and four bolts attaching transmission support case to structure (Figure 63-11).

63.4.5.2.9 Inspect isolation mounts and dampers for secure installation and distortion.

63.4.5.2.10 Inspect transmission and attached

• COPYRIGHT © 2007 BY DART AEROSPACE LTD. •
THIS DOCUMENT IS PRIVATE AND CONFIDENTIAL AND IS SUPPLIED ON THE EXPRESS CONDITION THAT IT IS NOT TO BE USED FOR ANY PURPOSE OR COPIED OR COMMUNICATED TO ANY OTHER PERSON WITHOUT WRITTEN PERMISSION FROM DART AEROSPACE LTD.

oil lines for leaks. If main input quill is leaking, replace seal (paragraph 63.7.4.1 to 63.7.4.2).

63.4.5.2.11 Inspect transmission for mechanical and corrosion damage (BHT-212-CR&O).

63.4.5.2.12 Inspect transmission electrical wiring for secure installation and damaged wires.

63.4.5.2.13 If installed, inspect main rotor mast (paragraph 63.3.2.2).

63.4.5.3 Installation

SPECIAL TOOLS REQUIRED

NUMBER	NOMENCLATURE
T101581	Maintenance hoist or equivalent

CAUTION

WHEN REPLACING TRANSMISSION FOR INTERNAL FAILURE OR METAL PARTICLES IN OIL, CLEAN ALL OIL LINES AND REPLACE OIL COOLER, EXTERNAL OIL FILTER, AND PERFORM MAST OVERHAUL.

63.4.5.3.1 Check condition of pylon mounts, and repair or replace any unserviceable parts.

NOTE

If mast assembly is not installed, transmission can be hoisted using cover and lift plate assembly (204-040-929-029 or 204-040-929-101).

63.4.5.3.2 Install mast assembly, if removed (paragraph 63.3.2.3).

63.4.5.3.3 Erect T101581 maintenance hoist, or provide other suitable hoisting equipment. Attach hoist to mast nut on top of mast.

63.4.5.3.4 Lift transmission from stand. Lower carefully to position on four main mount bolts, meanwhile guiding lift link into mounting points on transmission support case.

63.4.5.3.5 Install lift link.

63.4.5.3.6 Install a retaining bolt (3, Figure 63-11) with a countersunk washer and a large shouldered washer (4), into top of each of four main mount bolts (7). Torque retaining bolts 90 to 105 foot-lbs. (122 to 142 Nm).

NOTE

Ensure countersunk side of washer is toward bolthead.

63.4.5.3.7 Install fifth mount support (6) with bolts on aft side of pylon support. Attach fifth mount eyebolt (5) with bolt assembly (2), washer, and nut. Torque nut 300 to 400 inch-lbs. (33.90 to 45.19 Nm). Secure with cotter pin.

NOTE

If necessary for alignment, peel laminated filler plates under fifth mount. Alignment must allow installing bolt without moving transmission vertically. The transmission will have to be moved laterally.

63.4.5.3.8 Install main rotor, stabilizer bar, and connect rotating controls (Chapter 62).

63.4.5.3.9 Install forward tail rotor driveshaft (Chapter 65).

63.4.5.3.10 Install main driveshaft (paragraph 63.2.1.4).

63.4.5.3.11 Install hydraulic pumps on drive pad at right side of transmission sump case and on forward drive pad of transmission main case (Chapter 29).

63.4.5.3.12 Install tachometer generator.

63.4.5.3.13 Connect transmission electrical harness cable at connector on right side of pylon support.

63.4.5.3.14 Connect oil outlet and inlet hoses (Figure 63-15).

63.4.5.3.15 Connect oil drain line to sump.

63.4.5.3.16 Install rotor brake assembly and

• COPYRIGHT © 2007 BY DART AEROSPACE LTD. •
THIS DOCUMENT IS PRIVATE AND CONFIDENTIAL AND IS SUPPLIED ON THE EXPRESS CONDITION THAT IT IS NOT TO BE USED FOR ANY PURPOSE OR COPIED OR COMMUNICATED TO ANY OTHER PERSON WITHOUT WRITTEN PERMISSION FROM DART AEROSPACE LTD.

electrical wires (Chapter 96), if so equipped.

63.4.5.3.17 Service transmission with oil (Chapter 12). Verify actual presence of oil in sight gage. Visually check oil level to full mark on indicator.

63.4.5.3.18 Check engine-to-transmission alignment (Chapter 71).

63.4.5.3.19 If transmission has not previously been qualified on run-in test stand, accomplish alternate run-in test (paragraph 63.4.5.4).

NOTE

If run-in and test is to be accomplished on helicopter, do not install engine or transmission cowlings.

63.4.5.3.20 Install all firewalls, baffles, fairings, cowlings, and access doors.

63.4.5.4 Alternate Run in and Test

NOTE

After overhaul, the transmission shall be test run and inspected. In event a run-in stand is not available, the following functional test is acceptable:

63.4.5.4.1 Install sufficient ballast in cabin to obtain maximum gross weight (FMS-D212-725-1).

63.4.5.4.2 Ensure helicopter has been lubricated and serviced (Chapter 12). Visually inspect the following:

63.4.5.4.2.1 Oil system for security and leakage.

63.4.5.4.2.2 Fuel system for security and leakage.

63.4.5.4.2.3 Hydraulic system for security and leakage.

63.4.5.4.2.4 Flight controls for security.

63.4.5.4.3 Inspect engine accessories and controls for security, loose connections, and proper operation.

NOTE

Throughout the entire procedure which follows, check all components carefully for evidence of leakage and for abnormal noise.

63.4.5.4.4 Start engine (FMS-D212-725-1) and operate at 80% rotor rpm for five minutes. Verify temperature and pressure are within limits.

63.4.5.4.5 Gradually increase rotor rpm to 88% at a rate of 2% each six minutes.

63.4.5.4.6 Hold at 88% rotor rpm for two minutes with collective pitch applied to maximum position which can be maintained without becoming airborne.

63.4.5.4.7 Shut down helicopter (FMS-D212-725-1) and check oil jets, wafer type oil filter (if installed) or debris monitor (if installed), and magnetic chip detector for foreign material or chips.

63.4.5.4.8 Remove, clean, and install oil jets, wafer type oil filter (or debris monitor), and magnetic chip detector.

63.4.5.4.9 For Transmissions 212-040-001-059 and subsequent, and transmissions modified by T.B. 212-80-35, remove, inspect, clean, and install three electric chip detectors (paragraphs 63.5.4, 63.5.5, and 63.5.6).

63.4.5.4.10 Start engine (FMS-D212-725-1) and gradually increase to 88% rotor rpm. Run at 88% rotor rpm for six minutes. Move collective pitch to maximum position which can be maintained without becoming airborne. Gradually increase rotor rpm to 100%, without becoming airborne, at the rate of 3% each six minutes.

63.4.5.4.11 At 100% rotor rpm, check transmission oil pressure. Pressure should be 52 to 58 psig (359 to 400 kPa) when oil temperature is 194 to 212°F (90 to 100°C). If pressure is not within these limits, stop engine and adjust oil pressure relief valve. Turn slotted screw clockwise to increase pressure or

• COPYRIGHT © 2007 BY DART AEROSPACE LTD. •
THIS DOCUMENT IS PRIVATE AND CONFIDENTIAL AND IS SUPPLIED ON THE EXPRESS CONDITION THAT IT IS NOT TO BE USED FOR ANY PURPOSE OR COPIED OR COMMUNICATED TO ANY OTHER PERSON WITHOUT WRITTEN PERMISSION FROM DART AEROSPACE LTD.

counterclockwise to decrease pressure. When required pressure is obtained, tighten jam nut. Start engine and gradually increase rotor rpm to 100% and recheck pressure. Repeat procedure until pressure is within limits.

63.4.5.4.12 Run at 100% rotor rpm for thirty minutes with collective pitch to the maximum up position which can be maintained without becoming airborne.

63.4.5.4.13 Shut down helicopter (FMS-D212-725-1) and remove and inspect oil jets, wafer type oil filter (or debris monitor), and chip detector for foreign material or chips. If no chips are found, clean and reinstall jets, filter, and chip detector.

63.4.5.4.14 Inspect tail rotor drive quill couplings and surrounding area for evidence of grease leakage. If there is evidence of grease leakage, replace defective parts. Repeat leak test run.

63.4.5.4.15 Inspect tail rotor driveshaft couplings temperature indicator “TEMP-PLATES” for discoloration and overheat condition. A change in color of ‘TEMP-PLATES” from white or light gray to black indicates a possible overheat condition and/or component degradation. If overheating is suspected or indicated, cause shall be determined and corrected prior to helicopter being released for flight. Refer to Chapter 65 for tail rotor driveshaft couplings ‘TEMP-PLATE” inspection.

63.4.5.4.16 Check transmission oil level, service if required (Chapter 12).

63.4.5.4.17 Install transmission and engine cowling.

• COPYRIGHT © 2007 BY DART AEROSPACE LTD. •
THIS DOCUMENT IS PRIVATE AND CONFIDENTIAL AND IS SUPPLIED ON THE EXPRESS CONDITION THAT IT IS NOT TO BE USED FOR ANY PURPOSE OR COPIED OR COMMUNICATED TO ANY OTHER PERSON WITHOUT WRITTEN PERMISSION FROM DART AEROSPACE LTD.

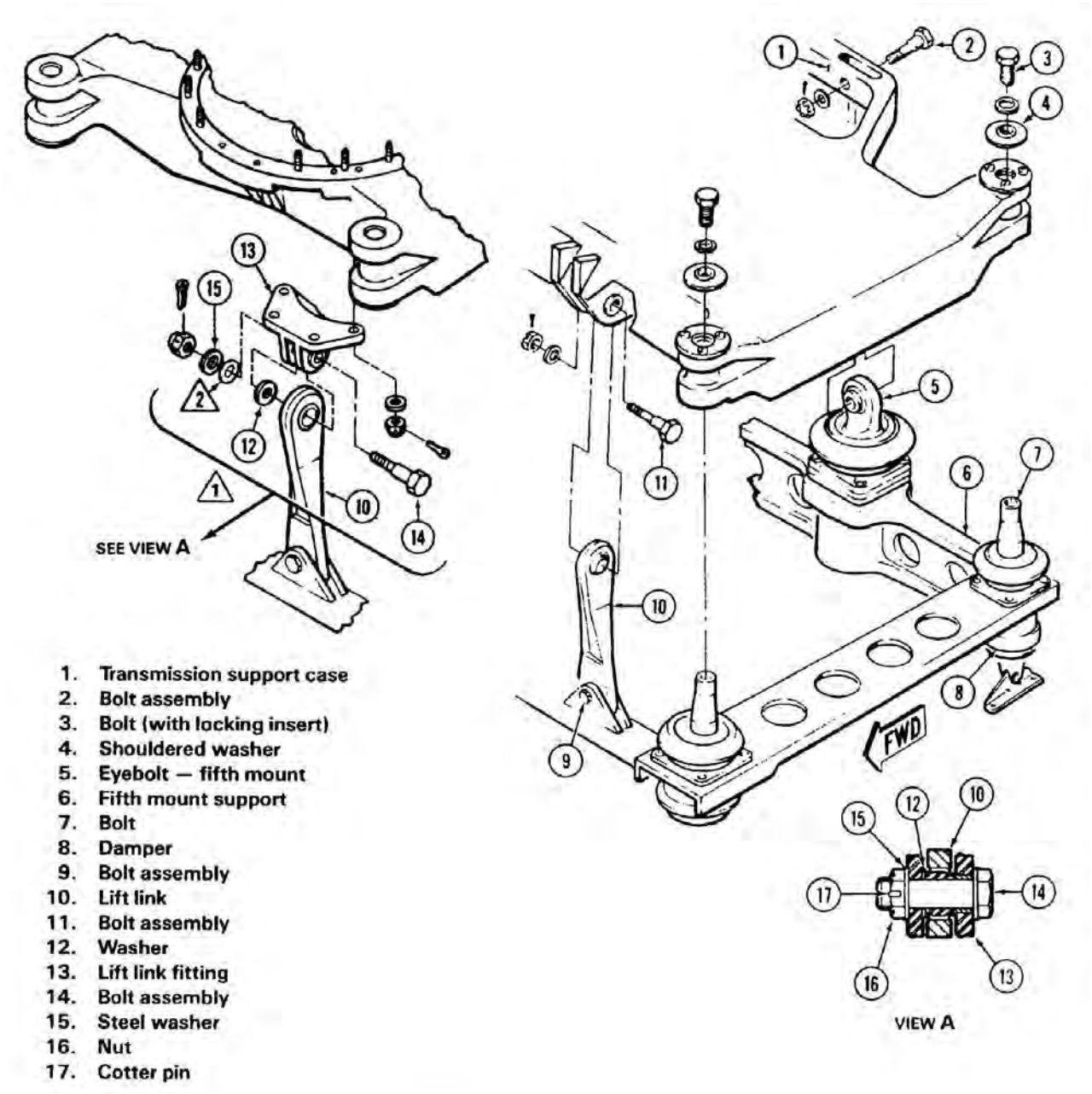

1. Transmission support case
2. Bolt assembly
3. Bolt (with locking insert)
4. Shouldered washer
5. Eyebolt — fifth mount
6. Fifth mount support
7. Bolt
8. Damper
9. Bolt assembly
10. Lift link
11. Bolt assembly
12. Washer
13. Lift link fitting
14. Bolt assembly
15. Steel washer
16. Nut
17. Cotter pin

NOTES

1. On helicopters with steel lift link fitting P/N 212-040-106.
2. Add one additional washer, if required, to obtain cotter pin hole and nut castellation alignment. ensure washers are positioned as shown in view A.

Figure 63-11. Transmission Mounting Hardware

• COPYRIGHT © 2007 BY DART AEROSPACE LTD. •
THIS DOCUMENT IS PRIVATE AND CONFIDENTIAL AND IS SUPPLIED ON THE EXPRESS CONDITION THAT IT IS NOT TO BE USED FOR ANY PURPOSE OR COPIED OR COMMUNICATED TO ANY OTHER PERSON WITHOUT WRITTEN PERMISSION FROM DART AEROSPACE LTD.

63.5 TRANSMISSION OIL SYSTEM COMPONENTS

63.5.1 Transmission Oil System

The transmission is lubricated by an oil system (Figures 63-12 to 63-15) which is independent of the engine oil system, except coolers are mounted together and use the same blower (Figure 63-15). Oil supply is contained in the transmission sump, and is circulated under pressure from the gear-driven pump through internal passages and a filter to a sump outlet. Oil from the sump outlet normally passes through external lines to the cooler at bottom aft fuselage and returns to the transmission through a second filter. During starts in cool ambient temperatures, a relief valve will open to bypass the cooler until oil warms, then will close for normal flow. From the external filter, oil enters the pressure manifold on the transmission. The manifold is equipped with a pressure regulating relief valve and distributes oil through tubes, internal passages, and jets to lubricate bearings and gears inside the transmission, where oil drains back into the sump case. Oil temperature and pressure gage indications are provided by a temperature bulb and a pressure transmitter. A thermoswitch and a pressure switch will light the XSMN OIL TEMP (high) or XMSN OIL PRESS (low) segments on the caution panel if such conditions occur. A chip detector in the sump is connected to the XMSN CHIP caution light. Helicopters with transmissions 212-040-001-059 and subsequent and transmissions modified by T.B. 212-80-35 have a mast bearing electric chip detector in the top case, a main input gear quill electric chip detector in the main case, and a sump case electric chip detector, and each chip detector is connected to a caution light and indicators in the cabin. Refer to Chapter 96 for a detailed description of the caution light and indicators. Oil level sight gages on the transmission sump case can be checked through a view port on right side of pylon support structure in the cabin

• COPYRIGHT © 2007 BY DART AEROSPACE LTD. •
THIS DOCUMENT IS PRIVATE AND CONFIDENTIAL AND IS SUPPLIED ON THE EXPRESS CONDITION THAT IT IS NOT TO BE USED FOR ANY PURPOSE OR COPIED OR COMMUNICATED TO ANY OTHER PERSON WITHOUT WRITTEN PERMISSION FROM DART AEROSPACE LTD.

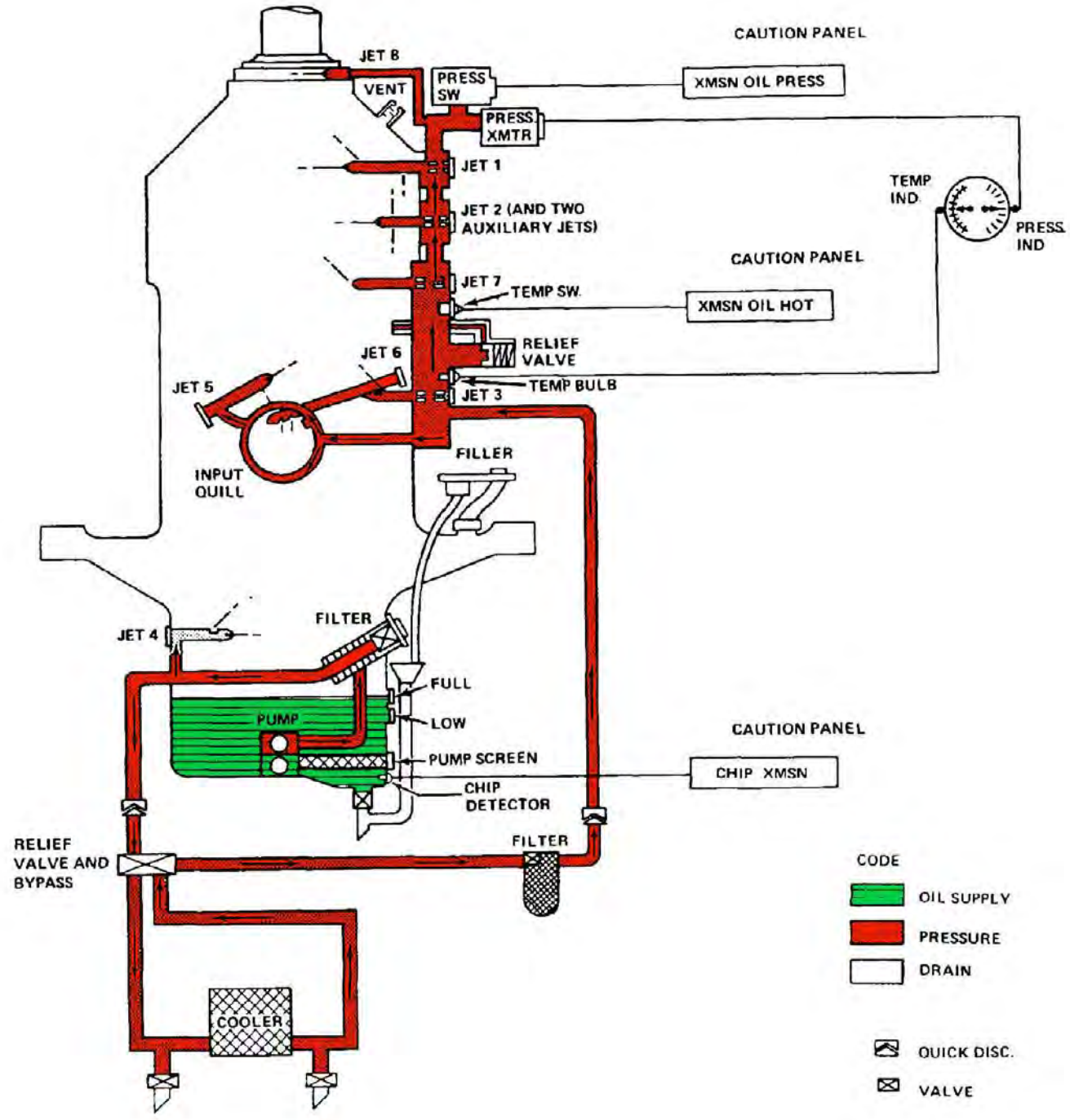

Figure 63-12. Transmission Oil System Schematic

• COPYRIGHT © 2007 BY DART AEROSPACE LTD. •
THIS DOCUMENT IS PRIVATE AND CONFIDENTIAL AND IS SUPPLIED ON THE EXPRESS CONDITION THAT IT IS NOT TO BE USED FOR ANY PURPOSE OR COPIED OR COMMUNICATED TO ANY OTHER PERSON WITHOUT WRITTEN PERMISSION FROM DART AEROSPACE LTD.

63.5.2 Transmission Oil Pressure Relief Valve

The pressure relief valve (10, Figure 63-13) is mounted in the oil manifold located at right aft side of transmission main case. The valve is pre-adjusted to maintain a system pressure of 50 ± 5 psig (345 ± 34.5 kPa).

63.5.2.1 Removal

63.5.2.1.1 Remove lockwire. Use wrench on hexagon shoulder of oil pressure relief valve (1, Figure 63-14) body to loosen and remove valve assembly, with packing (2).

63.5.2.1.2 Discard packing (2).

63.5.2.2 Installation

63.5.2.2.1 Verify threads of oil pressure relief valve (1, Figure 63-14) are clean and undamaged. Lubricate threads and packing (2) with transmission oil, and place packing on valve.

63.5.2.2.2 Install valve (1) in manifold and secure with lockwire (C-405).

63.5.2.2.3 Check oil pressure in operation.

63.5.2.3 Adjustment

If transmission oil pressure indication is unsatisfactory during operation and transmission oil temperature stabilized in normal range, see troubleshooting chart for possible cause.

63.5.2.3.1 When required, adjust oil pressure relief valve (1, Figure 63-14).

63.5.2.3.1.1 Loosen jamnut holding adjustment screw at top of valve body.

63.5.2.3.1.2 Turn adjusting screw in to increase, or out to decrease indicated oil pressure.

63.5.2.3.1.3 Tighten adjustment screw jamnut.

63.5.2.3.1.4 Recheck oil pressure in operation.

63.5.2.3.2 Replace oil pressure relief valve (1), if adjustment cannot be made satisfactory.

• COPYRIGHT © 2007 BY DART AEROSPACE LTD. •
THIS DOCUMENT IS PRIVATE AND CONFIDENTIAL AND IS SUPPLIED ON THE EXPRESS CONDITION THAT IT IS NOT TO BE USED FOR ANY PURPOSE OR COPIED OR COMMUNICATED TO ANY OTHER PERSON WITHOUT WRITTEN PERMISSION FROM DART AEROSPACE LTD.

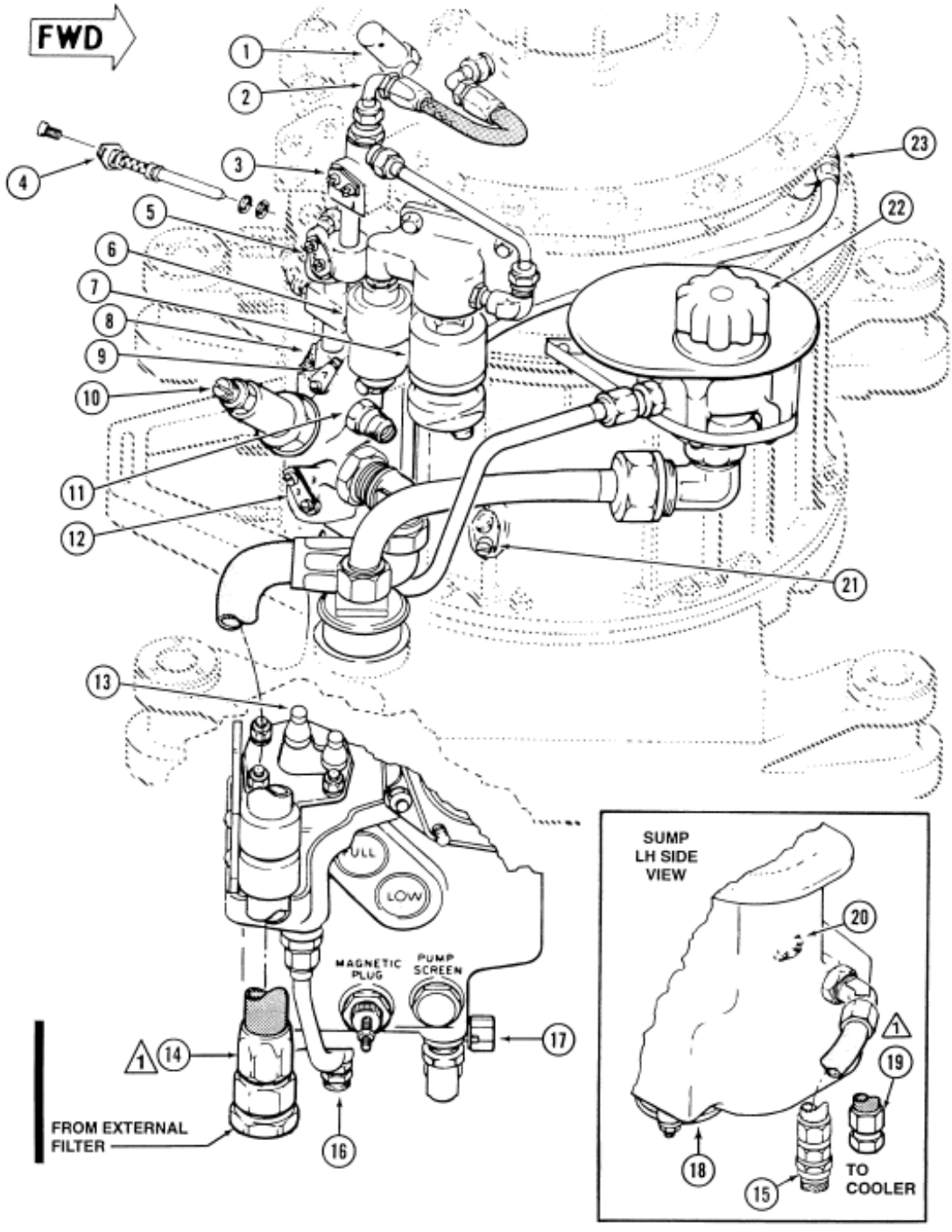

Figure 63-13. Transmission Oil System (Sheet 1 of 2)

• COPYRIGHT © 2007 BY DART AEROSPACE LTD. •
THIS DOCUMENT IS PRIVATE AND CONFIDENTIAL AND IS SUPPLIED ON THE EXPRESS CONDITION THAT IT IS NOT TO BE USED FOR ANY PURPOSE OR COPIED OR COMMUNICATED TO ANY OTHER PERSON WITHOUT WRITTEN PERMISSION FROM DART AEROSPACE LTD.

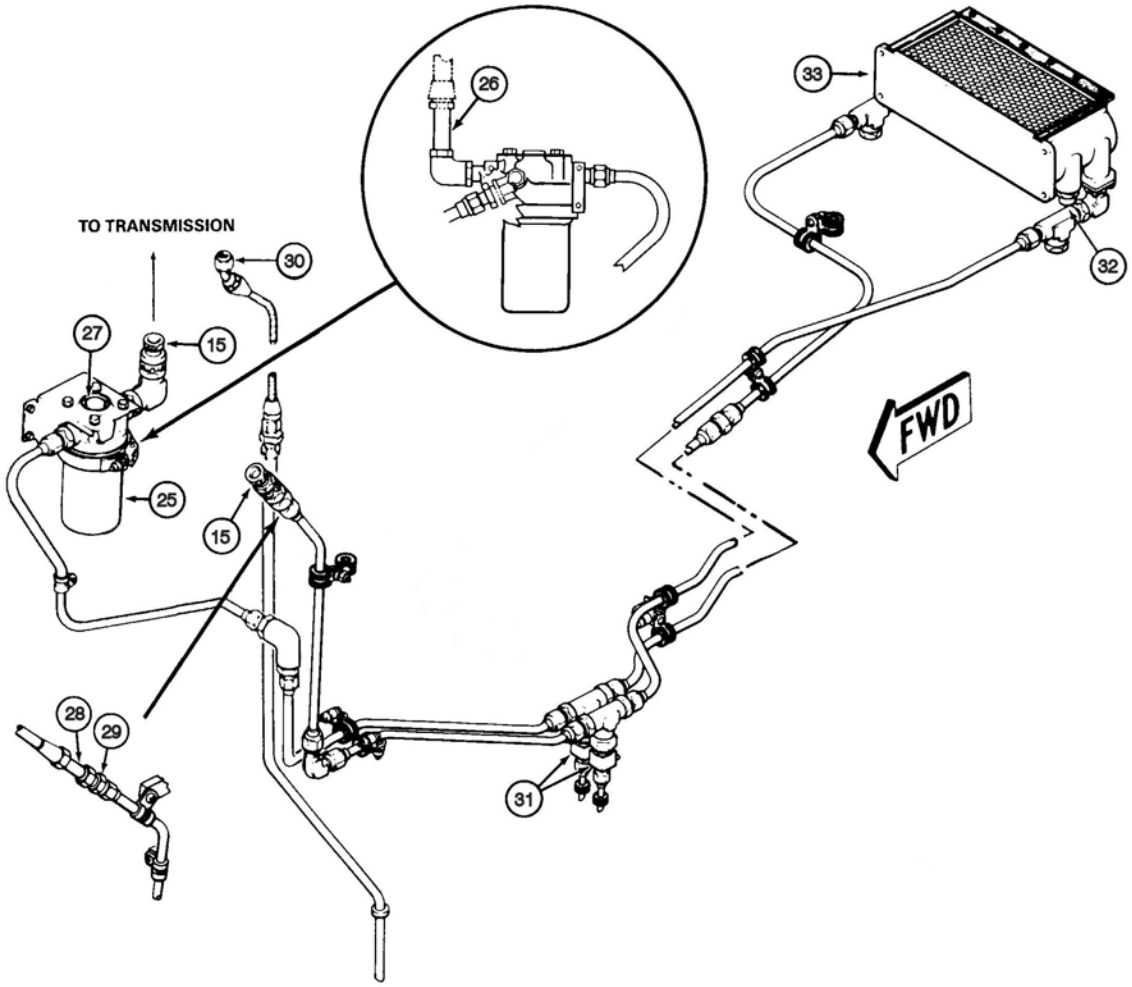

1. Breather
2. Line to mast jet
3. Jet no. 1
4. Jet no. 5
5. Jet no. 2
6. Pressure switch
7. Pressure transmitter
8. Thermoswitch
9. Jet no. 7
10. Pressure relief valve
11. Temperature bulb
12. Jet no. 3
13. Sump filter
14. Inlet hose
15. Coupling (375200-12)
16. Drain hose connection
17. Drain valve
18. pump
19. Outlet hose
20. Jet no. 4
21. Sight glass indicator
22. Jet no. 6
23. Filler cap
24. Auxiliary jet
25. External filter
26. Fitting (212-040-272)
27. Filter bypass indicator
28. Fitting (212-040-272)
29. Bushing
30. Drain hose
31. Drain valves
32. Thermo bypass valve
33. Cooler

Figure 63-13. Transmission Oil System (Sheet 2 of 2)

• COPYRIGHT © 2007 BY DART AEROSPACE LTD. •
THIS DOCUMENT IS PRIVATE AND CONFIDENTIAL AND IS SUPPLIED ON THE EXPRESS CONDITION THAT IT IS NOT TO BE USED FOR ANY PURPOSE OR COPIED OR COMMUNICATED TO ANY OTHER PERSON WITHOUT WRITTEN PERMISSION FROM DART AEROSPACE LTD.

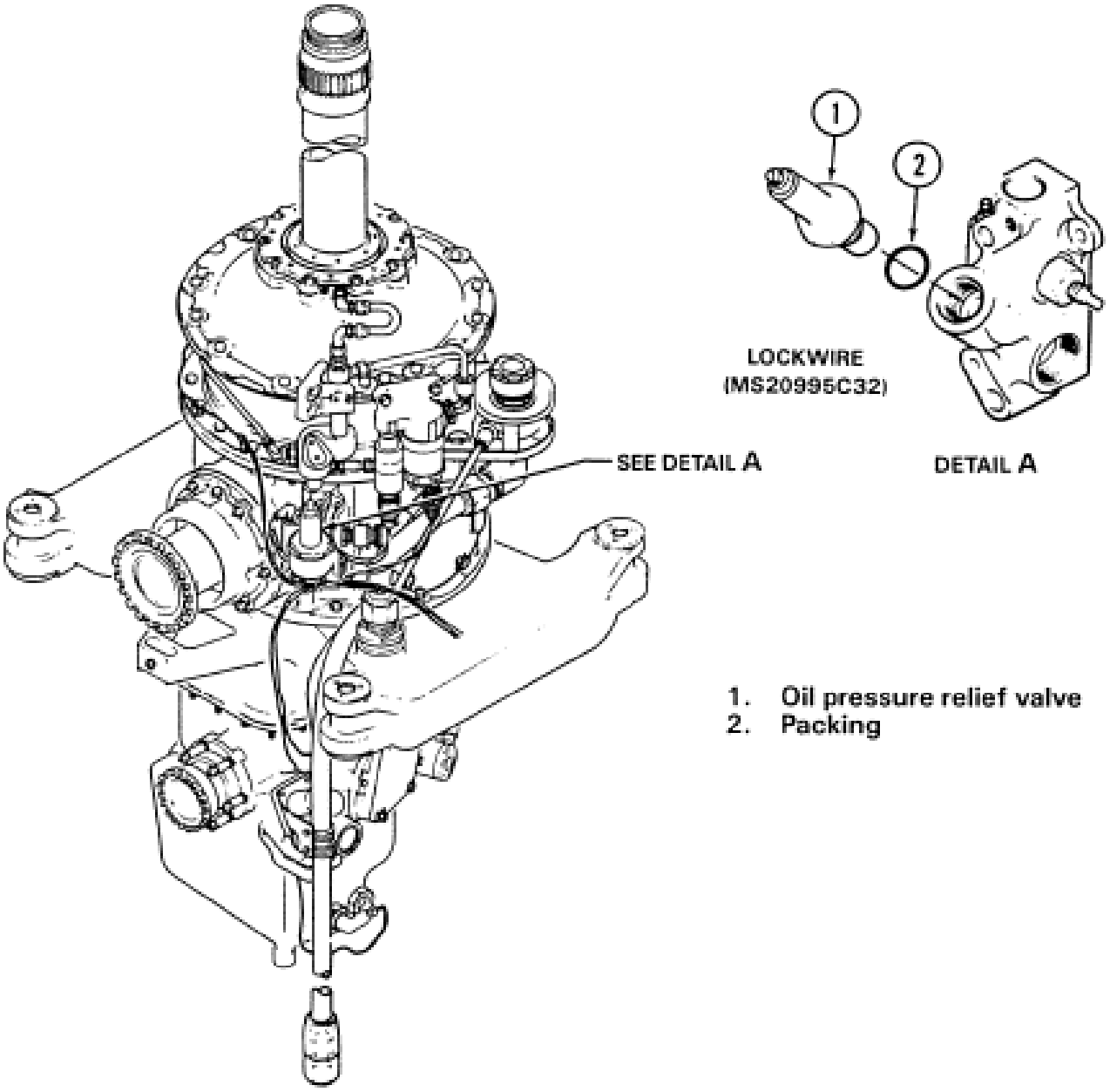

Figure 63-14. Oil Pressure Relief Valve

• COPYRIGHT © 2007 BY DART AEROSPACE LTD. •
THIS DOCUMENT IS PRIVATE AND CONFIDENTIAL AND IS SUPPLIED ON THE EXPRESS CONDITION THAT IT IS NOT TO BE USED FOR ANY PURPOSE OR COPIED OR COMMUNICATED TO ANY OTHER PERSON WITHOUT WRITTEN PERMISSION FROM DART AEROSPACE LTD.

63.5.3 Transmission Oil Pump

The oil pump (18, Figure 63-13) is mounted in the underside of transmission sump case, and is driven by reduction gears and a splined shaft.

63.5.3.1 Removal

63.5.3.1.1 Remove access door on front of pylon support in cabin.

63.5.3.1.2 Drain oil from transmission sump case (Chapter 12).

63.5.3.1.3 Remove oil pump inlet screen (17, Figure 63-15). Remove drain tubes (11 and 15).

63.5.3.1.4 Remove nut (9) and washers (8), and bracket (10), tee connection (14), nut (12), and washer (13) together as an assembly.

63.5.3.1.5 Clean sealant from puller hole in bottom center of pump (4) using a sharp plastic scraper.

CAUTION

THREADED HOLE IS FOR ATTACHING PULLER. DO NOT USE A JACKSCREW. DO NOT LET PULLER BOLT BOTTOM OUT IN THREADED HOLE OR PUMP MAY BE DAMAGED.

63.5.3.1.6 Install slide hammer type puller equipped with 1/4 X 28 UNF threads into center of pump base.

63.5.3.1.7 Loosen jamnut on drain valve (13A) and rotate counterclockwise.

63.5.3.1.8 Remove remaining nuts (7) with washers (5 and 6).

63.5.3.1.9 Pull pump (4) downward from sump case using puller to assist removal.

63.5.3.1.10 Remove and discard packings (2 and 3).

63.5.3.1.11 Cover opening in sump case (1).

63.5.3.2 Installation

MATERIALS REQUIRED

Refer to BHT-ALL-SPM for specification and source.

NUMBER	NOMENCLATURE
C-405	Lockwire

63.5.3.2.1 Install new packings (2 and 3, Figure 63-15) in grooves on oil pump (4).

63.5.3.2.2 Remove cover from opening in sump case (1).

63.5.3.2.3 Warm sump case port with a heat lamp, and lubricate packings and mating surfaces with transmission oil to facilitate installation of pump. Turn main rotor slowly as necessary to obtain alignment of parts.

63.5.3.2.4 Insert pump (4) into mounting port. Align pump shaft with internal splines of transmission shaft (18) and align pump flange over mount studs. Use a flashlight to verify engagement of pump and shaft (18) through open port of oil pump screen.

63.5.3.2.5 Install bracket (10), tee connection (14), washer (13), and nut (12) on pump mounting stud.

63.5.3.2.6 Install steel washer (8) and nut (9). Position drain valve (13A) as required and tighten jamnut.

63.5.3.2.7 Install aluminum washers (5), thin steel washers (6), and nuts (7). Torque nuts (7) and nut (9) 50 to 70 inch-lbs. (5.6 to 7.0 Nm).

63.5.3.2.8 Connect drain tubes (11 and 15).

63.5.3.2.9 Install oil pump inlet screen (17) with new, lubricated packing (16). Torque screen (17) 300 to 400 inch-lbs. (33.9 to 45.1 Nm).

• COPYRIGHT © 2007 BY DART AEROSPACE LTD. •
THIS DOCUMENT IS PRIVATE AND CONFIDENTIAL AND IS SUPPLIED ON THE EXPRESS CONDITION THAT IT IS NOT TO BE USED FOR ANY PURPOSE OR COPIED OR COMMUNICATED TO ANY OTHER PERSON WITHOUT WRITTEN PERMISSION FROM DART AEROSPACE LTD.

63.5.3.2.10 Secure screen (17) to chip detector base with lockwire (C-405).

63.5.3.2.11 Service transmission (Chapter 12).

63.5.3.2.12 Install access door.

63.5.3.2.13 Check for oil leaks at next helicopter ground run.

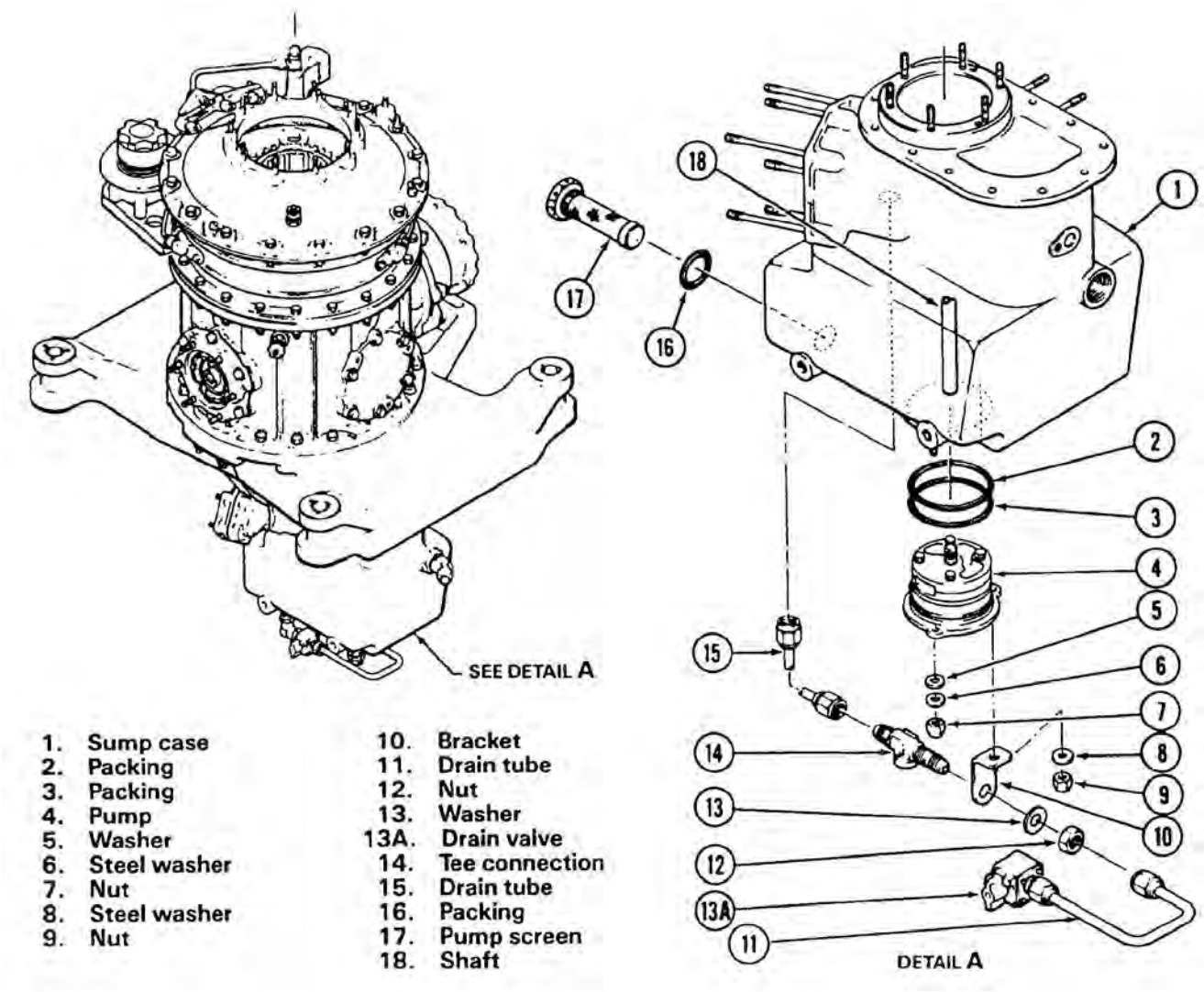

Figure 63-15. Transmission Oil Pump

• COPYRIGHT © 2007 BY DART AEROSPACE LTD. •
THIS DOCUMENT IS PRIVATE AND CONFIDENTIAL AND IS SUPPLIED ON THE EXPRESS CONDITION THAT IT IS NOT TO BE USED FOR ANY PURPOSE OR COPIED OR COMMUNICATED TO ANY OTHER PERSON WITHOUT WRITTEN PERMISSION FROM DART AEROSPACE LTD.

63.5.4 Transmission Mast Bearing Electric Chip Detector (Transmissions 212-040-001-059 and Subsequent and Transmissions modified by T.B. 212-80-35)

The mast bearing electric chip detector is installed in the transmission top case (Figure 63-16) to detect foreign particles in the transmission oil originating from the main rotor mast upper bearing.

63.5.4.1 Removal

63.5.4.1.1 Remove nut (1, Figure 63-16) and disconnect wire from stud (2).

63.5.4.1.2 Push and twist chip detector (4) counterclockwise to disengage locking lugs (3). Remove chip detector from housing (6).

63.5.4.1.3 Remove housing (6) from transmission.

63.5.4.1.4 Remove and discard packing from chip detector and, if removed, discard packing from housing.

63.5.4.2 Cleaning

MATERIALS REQUIRED

Refer to BHT-ALL-SPM for specification and source.

NUMBER	NOMENCLATURE
C-304	Solvent

63.5.4.2.1 Clean chip detector with solvent (C-304).

63.5.4.2.2 Dry with filtered, compressed air.

63.5.4.3 Inspection

63.5.5.3.1 Inspect chip detector (4, Figure 63-17) for presence of metal particles. If any particles are found, refer to paragraph 63.1.2 for required action.

63.5.4.3.2 Inspect chip detector components in accordance with Figure 63-17.

63.5.4.4 Installation

63.5.4.4.1 Coat new packing (7, Figure 63-16) with transmission oil (Chapter 12). Install packing on housing (6).

63.5.4.4.2 If required, remove plug (detail A) in top of transmission case and install housing. Torque housing 280 to 300 inch-lbs. (31.7 to 33.9 Nm). Secure housing to transmission with lockwire (C-405).

63.5.4.4.3 Lubricate a new packing (5) with transmission oil (Chapter 12) and install on chip detector (4). Insert chip detector into housing (6). Push in on chip detector and twist clockwise to engage locking lugs (3).

63.5.4.4.4 Install electrical wire on stud (2). Install and tighten nut to a maximum of 4.0 inch-lbs. (0.45 Nm) torque. Position nipple over nut (1).

63.5.5 Transmission Main Input Gear Quill Electric Chip Detector (Transmission 212-040-001-059 and Subsequent and Transmissions modified by T.B. 212-80-35)

The main input gear quill electric chip detector (Figure 63-18) is installed to detect metal particles in the transmission oil originating from the main input gear quill.

63.5.5.1 Removal

63.5.5.1.1 Remove nut (2, Figure 63-18) and disconnect wire from stud.

63.5.5.1.2 Push in and twist detector (5) counterclockwise to disengage locking lugs (4).

63.5.5.1.3 Withdraw detector from housing (7).

63.5.5.1.4 Remove and discard packing from chip detector and, if removed, discard packing

• COPYRIGHT © 2007 BY DART AEROSPACE LTD. •
THIS DOCUMENT IS PRIVATE AND CONFIDENTIAL AND IS SUPPLIED ON THE EXPRESS CONDITION THAT IT IS NOT TO BE USED FOR ANY PURPOSE OR COPIED OR COMMUNICATED TO ANY OTHER PERSON WITHOUT WRITTEN PERMISSION FROM DART AEROSPACE LTD.

from housing.

63.5.5.2 Cleaning

MATERIALS REQUIRED

Refer to BHT-ALL-SPM for specification and source.

NUMBER	NOMENCLATURE
C-304	Solvent

63.5.5.2.1 Clean chip detector with solvent (C-304).

63.5.5.2.2 Dry with filtered, compressed air.

63.5.5.3 Inspection

63.5.5.3.1 Inspect chip detector (5, Figure 63-18) for presence of metal particles. If any particles are found, refer to paragraph 63.1.2 for required action.

63.5.5.3.2 Inspect chip detector components in accordance with Figure 63-17.

63.5.5.4 Installation

63.5.5.4.1 Coat new packing (6 and 8, Figure 63-18) with transmission oil (Chapter 12). Install packing (8) on housing (7) and packing (6) on chip detector (5).

63.5.5.4.2 Install housing (7) on transmission. Torque housing 280 to 300 inch-lbs. (31.7 to 33.9 Nm). Secure housing to transmission with lockwire (C-405).

63.5.5.4.3 Insert chip detector into housing (7). Push in on chip detector and twist clockwise to engage locking lugs (4).

63.5.5.4.4 Install electrical wire on stud (3). Install and tighten nut (2) to a maximum of 4.0 inch-lbs. (0.45 Nm) torque. Position nipple over nut (1).

• COPYRIGHT © 2007 BY DART AEROSPACE LTD. •
THIS DOCUMENT IS PRIVATE AND CONFIDENTIAL AND IS SUPPLIED ON THE EXPRESS CONDITION THAT IT IS NOT TO BE USED FOR ANY PURPOSE OR COPIED OR COMMUNICATED TO ANY OTHER PERSON WITHOUT WRITTEN PERMISSION FROM DART AEROSPACE LTD.

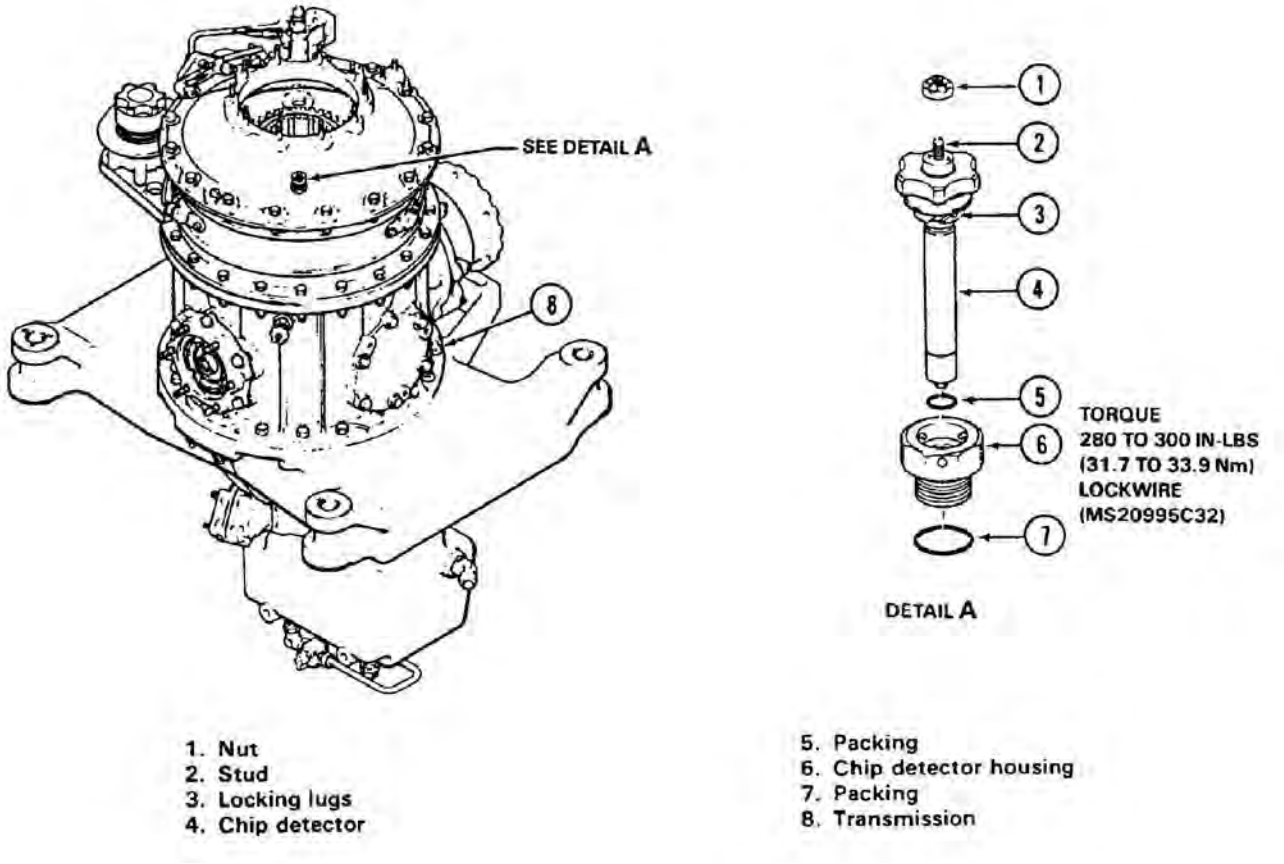

Figure 63-16. Mast Bearing Electric Chip Detector

• COPYRIGHT © 2007 BY DART AEROSPACE LTD. •
THIS DOCUMENT IS PRIVATE AND CONFIDENTIAL AND IS SUPPLIED ON THE EXPRESS CONDITION THAT IT IS NOT TO BE USED FOR ANY PURPOSE OR COPIED OR COMMUNICATED TO ANY OTHER PERSON WITHOUT WRITTEN PERMISSION FROM DART AEROSPACE LTD.

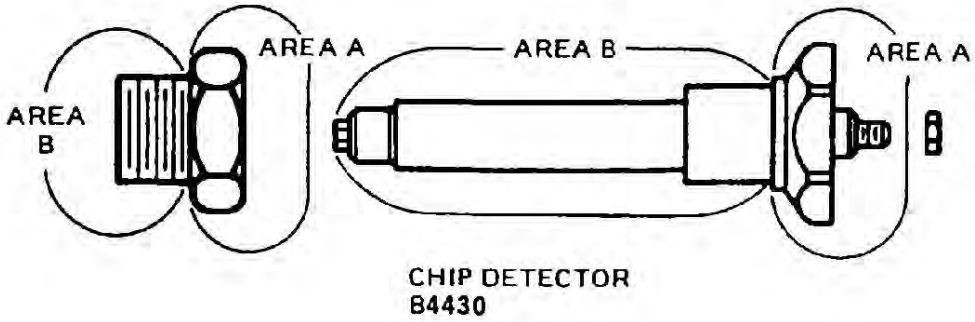

AREA	LIMITS
All	No cracks allowed.
A	Maximum depth of pitting is 0.030 inch (0.762 mm) with no more than 40 percent of any 1.0 inch square (645.15 sq. mm) or 20 percent of any total area of any pitted surface.
B	Maximum depth of pitting is 0.020 inch (0.508 mm) with no more than 40 percent of any 1.0 inch square (645.16 sq. mm) or 20 percent of total area of any pitted surface. Thread damage is not permitted.

Figure 63-17. Damage Limits – Electric Chip Detector (Typical)

• COPYRIGHT © 2007 BY DART AEROSPACE LTD. •
THIS DOCUMENT IS PRIVATE AND CONFIDENTIAL AND IS SUPPLIED ON THE EXPRESS CONDITION THAT IT IS NOT TO BE USED FOR ANY PURPOSE OR COPIED OR COMMUNICATED TO ANY OTHER PERSON WITHOUT WRITTEN PERMISSION FROM DART AEROSPACE LTD.

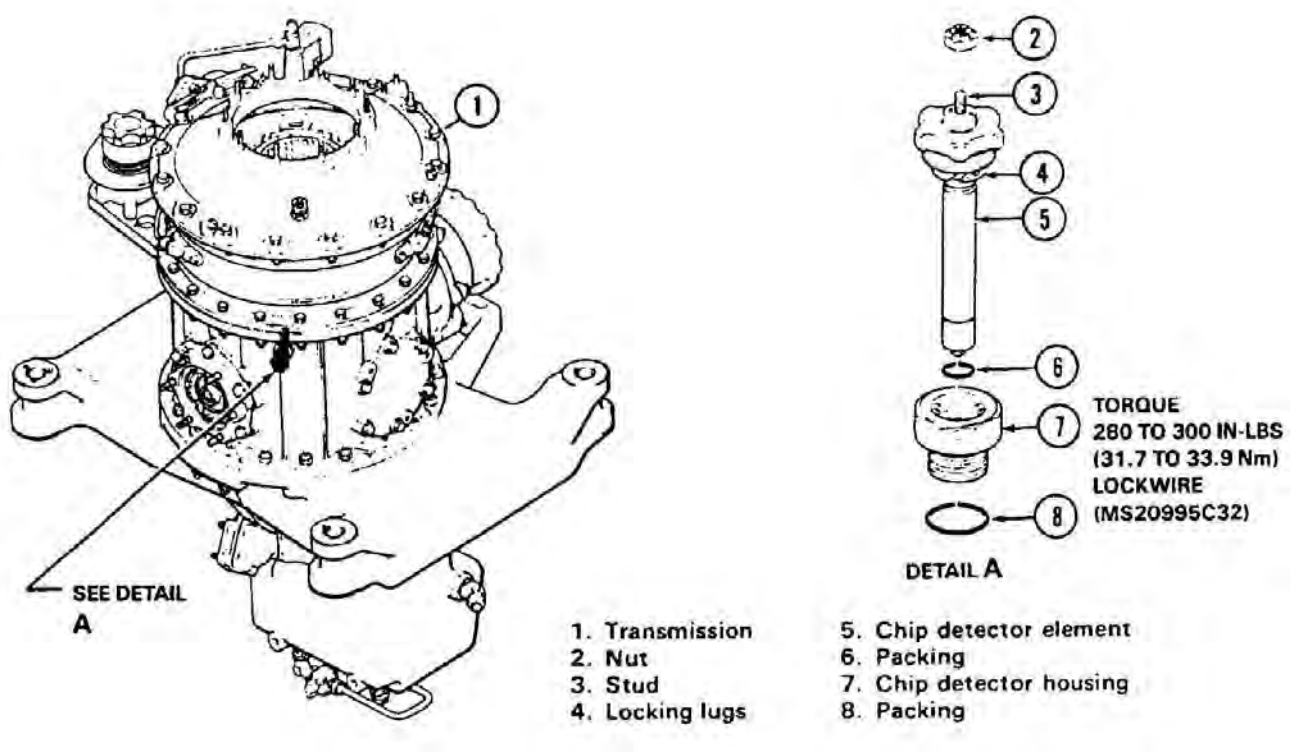

Figure 63-18. Main Input Quill Electric Chip Detector

• COPYRIGHT © 2007 BY DART AEROSPACE LTD. •
THIS DOCUMENT IS PRIVATE AND CONFIDENTIAL AND IS SUPPLIED ON THE EXPRESS CONDITION THAT IT IS NOT TO BE USED FOR ANY PURPOSE OR COPIED OR COMMUNICATED TO ANY OTHER PERSON WITHOUT WRITTEN PERMISSION FROM DART AEROSPACE LTD.

63.5.6 Transmission Sump Case Electric Chip Detector

All transmissions have an electric chip detector/drain plug located in the transmission sump case at lower right side (Figure 63-19). The outer plug is self-closing to prevent loss of oil when the bayonet-type detector element is removed. The electric chip detector is installed to detect metal particles which collect in sump.

63.5.6.1 Removal

63.5.6.1.1 Remove oil level access door on right side of pylon support in cabin.

63.5.6.1.2 Disconnect electrical lead (5, Figure 63-19) from electric chip detector (4).

63.5.6.1.3 Press in on knurled body of chip detector (4), turn counterclockwise to disengage bayonet pins, and withdraw chip detector from self-closing valve (2).

63.5.6.1.4 Inspect chip detector for accumulation of metal particles (Figure 63-2). Inspect packings (3) for serviceable condition and inspect chip detector in accordance with Figure 63-20.

NOTE

Self-closing valve (2) will normally remain in place.

63.5.6.1.5 Withdraw detector from valve (2).

63.5.6.1.6 If required, drain sump (Chapter 12) and remove self-closing valve (2) from sump case.

63.5.6.1.7 Remove and discard packings (3) from chip detector and, if removed, gasket (1) from valve (2).

63.5.6.2 Cleaning

63.5.6.2.1 Clean chip detector with solvent (C-304).

63.5.6.2.2 Dry with filtered, compressed air.

63.5.6.3 Inspection

63.5.6.3.1 Inspect chip detector (4, Figure 63-19) for presence of metal particles. If any particles are found, refer to paragraph 63.1.2 for required action.

63.5.6.3.2 Inspect chip detector components in accordance with Figure 63-20.

63.5.6.4 Installation

MATERIALS REQUIRED

Refer to BHT-ALL-SPM for specification and source.

NUMBER	NOMENCLATURE
C-405	Lockwire

NOTE

If drain plug was removed, reinstall with a new gasket (1). Torque valve 300 to 400 inch-lbs (33.90 to 45.20 Nm) and secure to head of pump screen and plug with lockwire (C-405). Refer to Figure 63-19, detail B.

CAUTION

WRONG SIZE OR TYPE PACKING ON CHIP DETECTOR MAY NOT ALLOW CAUTION PANEL SEGMENT TO ILLUMINATE AND MAY RESTRICT SELF-CLOSING VALVE

63.5.6.4.1 Place new packings (3, Figure 63-19) on chip detector (4), insert chip detector into self-closing valve (2), press in on knurled body, and turn clockwise to engage bayonet pins. Connect electrical lead (5) to chip detector terminal.

63.5.6.4.2 Install nipple (7) on chip detector terminal.

63.5.6.4.3 Check oil level. Install access door.

• COPYRIGHT © 2007 BY DART AEROSPACE LTD. •
THIS DOCUMENT IS PRIVATE AND CONFIDENTIAL AND IS SUPPLIED ON THE EXPRESS CONDITION THAT IT IS NOT TO BE USED FOR ANY PURPOSE OR COPIED OR COMMUNICATED TO ANY OTHER PERSON WITHOUT WRITTEN PERMISSION FROM DART AEROSPACE LTD.

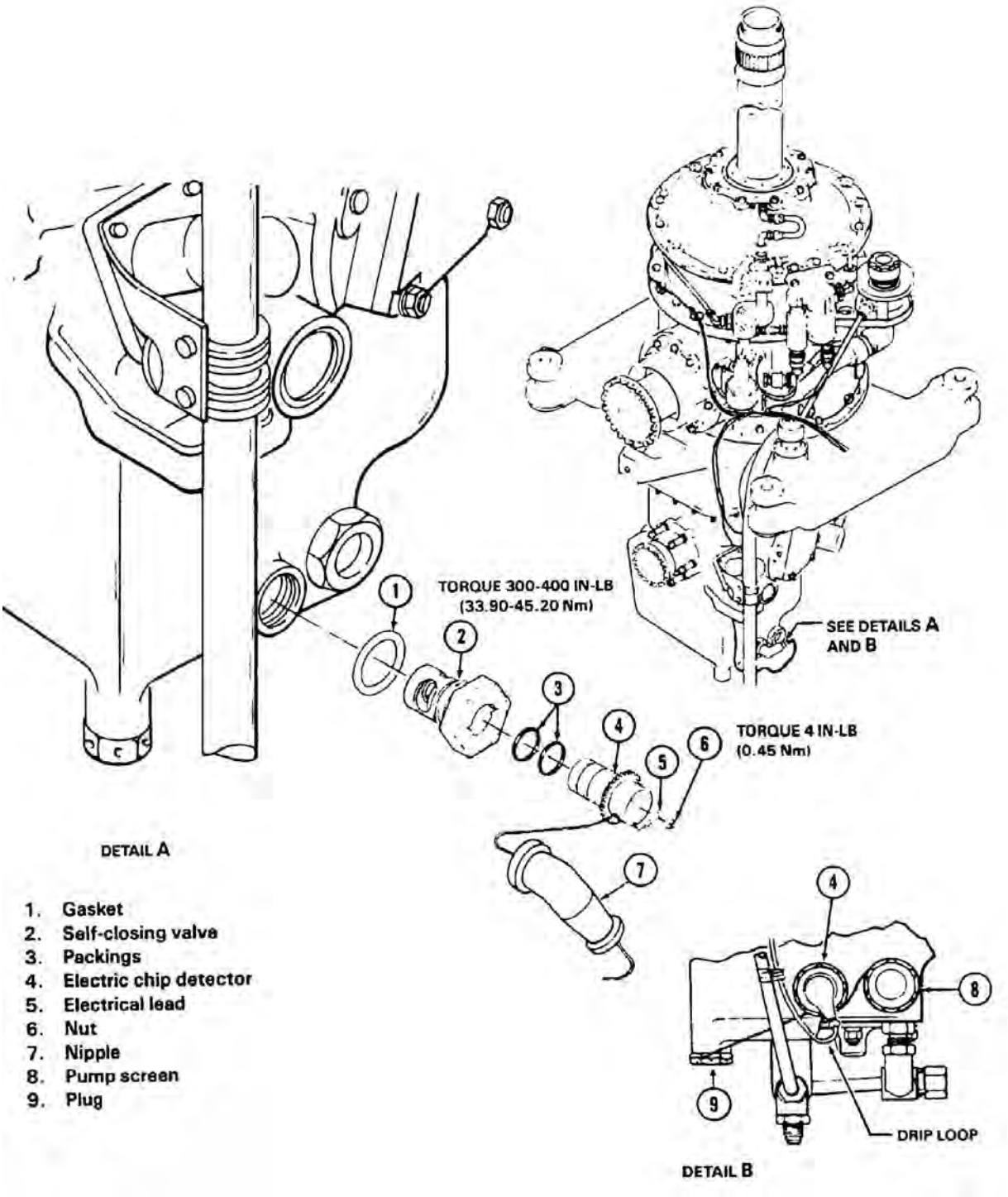

Figure 63-19. Sump Case Electric Chip Detector

• COPYRIGHT © 2007 BY DART AEROSPACE LTD. •
THIS DOCUMENT IS PRIVATE AND CONFIDENTIAL AND IS SUPPLIED ON THE EXPRESS CONDITION THAT IT IS NOT TO BE USED FOR ANY PURPOSE OR COPIED OR COMMUNICATED TO ANY OTHER PERSON WITHOUT WRITTEN PERMISSION FROM DART AEROSPACE LTD.

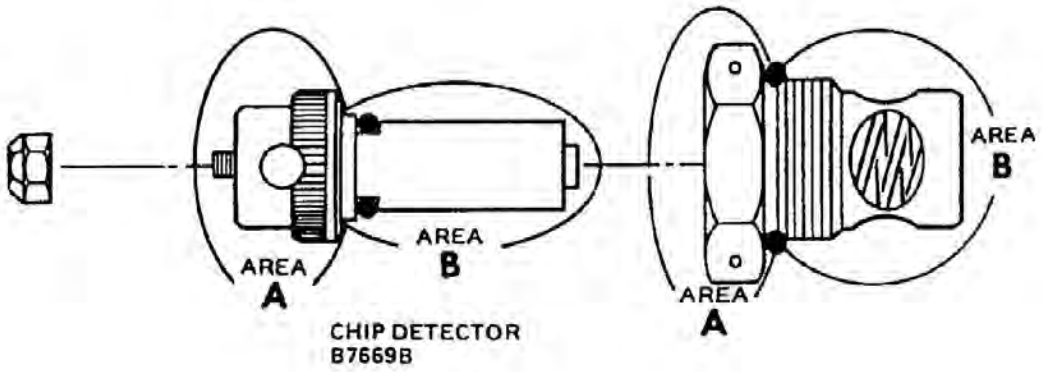

AREA	LIMITS
All	No cracks allowed.
A	Maximim depth of pitting is 0.030 inch (0.762 mm) with no more than 40 percent of any 1.0 inch (25.4 mm) square or 20 percent of any pitted surface.
B	Maximum depth of pitting is 0.020 inch (0.508 mm) with no more than 40 percent of any 1.0 inch (25.4 mm) square or 20 percent of total area of any pitted surface. Thread damage is not permitted.

Figure 63-20. Damage Limits – Sump Case Electric Chip Detector

• COPYRIGHT © 2007 BY DART AEROSPACE LTD. •
THIS DOCUMENT IS PRIVATE AND CONFIDENTIAL AND IS SUPPLIED ON THE EXPRESS CONDITION THAT IT IS NOT TO BE USED FOR ANY PURPOSE OR COPIED OR COMMUNICATED TO ANY OTHER PERSON WITHOUT WRITTEN PERMISSION FROM DART AEROSPACE LTD.

63.5.7 Transmission Oil Sump Filter

An oil filter is located in upper right aft corner of transmission sump case, with inlet and outlet through internal passages. The filter assembly consists of a stack of metal screens, assembled with spacers on a perforated tube, attached on a body equipped with a bypass valve for oil flow if screens become clogged. A scupper on the case below filter, has an overboard drain line for spilled oil. The following procedures apply to helicopters, S/N 30501 through 30999, 31101 through 31311, 32101 through 32142 and 35001 through 35025, which has not been modified by T.B. 212-91-1 31. For maintenance procedures applicable to helicopters S/N 31312 and subsequent, and 35026 and subsequent, and helicopters modified by T.B. 212-91-131 (Installation of full flow debris monitor), refer to paragraph 63.5.8.4.

63.5.7.1 Removal

63.5.7.1.1 Remove transmission oil level access door from right side of pylon support in cabin.

63.5.7.1.2 Remove nuts (1, 11, and 13, Figure 63-22) with washers (2, 10, and 12). Remove oil hose support bracket (3).

63.5.7.1.3 Remove nut (9) with washers (7 and 8).

63.5.7.1.4 Pull filter (4) from sump case. Allow excess oil to drain through scupper into a container.

63.5.7.1.5 Remove and discard packing (5) from filter.

63.5.7.2 Cleaning

MATERIALS REQUIRED

Refer to BHT-ALL-SPM for specification and source.

NUMBER	NOMENCLATURE
C-304	Solvent

63.5.7.2.1 Visually inspect filter screens for metal particles or other contamination. If metal particles are found, refer to paragraph 63.1.2.

NOTE

Filters may be disassembled for cleaning if necessary, but should only be done if not possible to clean sufficiently while assembled. Refer to Figure 63-22 for procedures.

63.5.7.2.2 Wash filter (4, Figure 63-22) with solvent (C-304).

63.5.7.2.3 Dry thoroughly with filtered, compressed air.

63.5.7.2.4 If filter is disassembled, proceed as follows:

63.5.7.2.4.1 Assemble filter, with spacer (3, Figure 63-23) first, with eleven spacers (3), ten screens (4) (alternately), washer (2) and nut (1).

63.5.7.2.4.2 Tighten nut (1) until screens will not rotate when turned by hand.

63.5.7.2.4.3 Bend one tang of washer (2) over a flat side of nut (1).

63.5.7.3 Inspection

63.5.7.3.1 Inspect filter for metal particles and/or other material. If metal particles are found, refer to paragraph 63.1.2.

63.5.7.3.2 Inspect wafer screens (4, Figure 63-23) for distortion or tears. Damage which can be detected visually is not acceptable.

63.5.7.3.3 Inspect spacers (3) for corrosion and deformation. Damage in excess of superficial is not acceptable.

63.5.7.3.4 Inspect nut (1) for corrosion and thread damage. Damage in excess of superficial is not acceptable.

63.5.7.3.5 Inspect filter body (5) for

• COPYRIGHT © 2007 BY DART AEROSPACE LTD. •
THIS DOCUMENT IS PRIVATE AND CONFIDENTIAL AND IS SUPPLIED ON THE EXPRESS CONDITION THAT IT IS NOT TO BE USED FOR ANY PURPOSE OR COPIED OR COMMUNICATED TO ANY OTHER PERSON WITHOUT WRITTEN PERMISSION FROM DART AEROSPACE LTD.

mechanical and corrosion damage (Figure 63-23).

63.5.7.4 Installation

63.5.7.4.1 Lubricate new packing (5, Figure 63-22). Install packing on filter (4).

63.5.7.4.2 Insert assembled filter in mounting port of sump (6).

63.5.7.4.3 Position bracket (3) over filter and sump case studs.

63.5.7.4.4 Install thin steel washers (2, 10, and 12) and nuts (1, 11, and 13).

63.5.7.4.5 Install thin aluminum washer (7) next to filter housing and thin steel washer (8) adjacent to nut (9). Install nut.

63.5.7.4.6 Torque nuts (1, 9, 11, and 13) initially 30 inch-lbs. (3.39 Nm) in sequence, upper forward, lower aft, lower forward and upper aft. Torque 50 to 70 inch-lbs. (5.6 to 7.9 Nm) in the same sequence.

63.5.7.4.7 Service transmission with oil (Chapter 12). Check for leaks during run-up. Install access door.

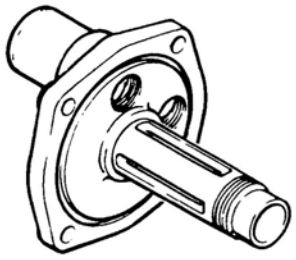

FILTER BODY
(Q2W10116)

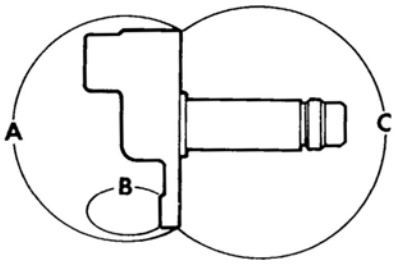

AREA	LIMITS
All	No cracks allowed.
A	Maximum depth of pitting is 0.030 inch (0.762 millimeter) with no more than 80% of any 1.0 inch square (645.16 square millimeter) or 30% of any pitted surface.
B	Maximum depth of pitting (including inside of bolt holes) is 0.020 inch (0.508 millimeter) with no more than 20% of area or wall of any hole to be pitted.
C	Maximum depth of pitting is 0.020 inch (0.508 millimeter) with no more than 30% of any 1.0 inch square (645.16 square millimeters) or 30% of total area of any pitted surface. Thread damage is not permitted.

Figure 63-21. Damage Limits - Sump Internal Filter

• COPYRIGHT © 2007 BY DART AEROSPACE LTD. •
THIS DOCUMENT IS PRIVATE AND CONFIDENTIAL AND IS SUPPLIED ON THE EXPRESS CONDITION THAT IT IS NOT TO BE USED FOR ANY PURPOSE OR COPIED OR COMMUNICATED TO ANY OTHER PERSON WITHOUT WRITTEN PERMISSION FROM DART AEROSPACE LTD.

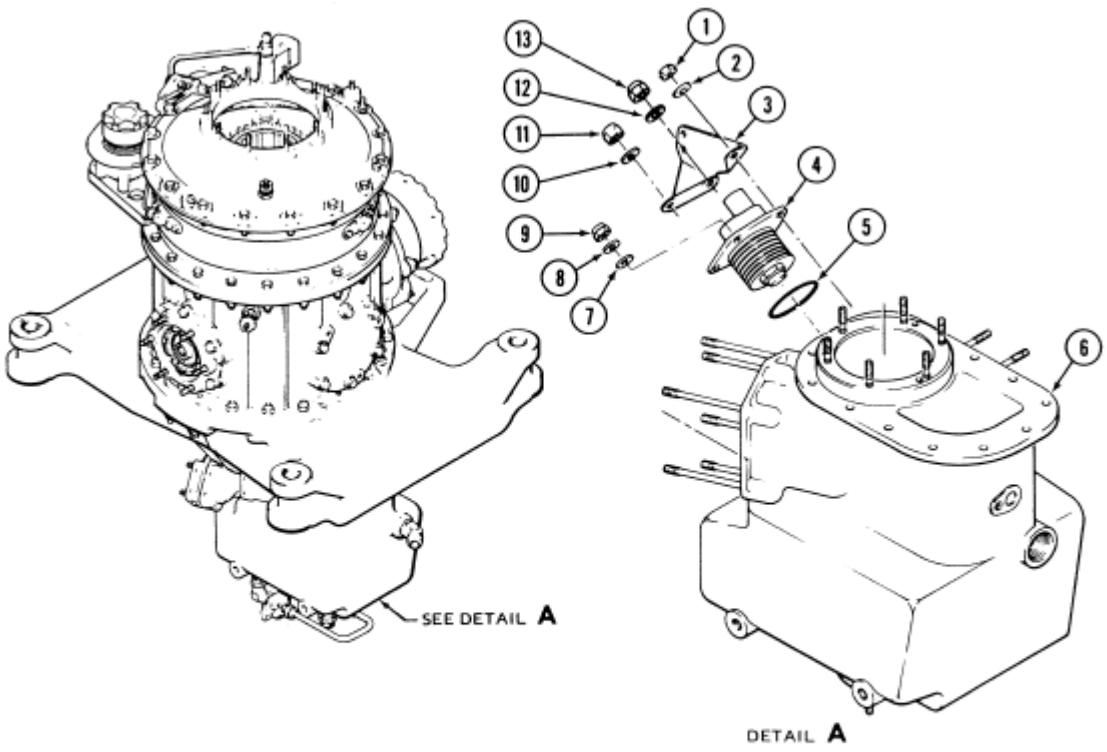

1. Nut
2. Thin steel washer
3. Bracket
4. Filter assembly
5. Packing
6. Sump case
7. Thin aluminum washer
8. Thin steel washer
9. Nut
10. Thin steel washer
11. Nut
12. Thin steel washer
13. Nut

Figure 63-22. Sump Internal Filter (pre TB 212-91-131)

• COPYRIGHT © 2007 BY DART AEROSPACE LTD. •
THIS DOCUMENT IS PRIVATE AND CONFIDENTIAL AND IS SUPPLIED ON THE EXPRESS CONDITION THAT IT IS NOT TO BE USED FOR ANY PURPOSE OR COPIED OR COMMUNICATED TO ANY OTHER PERSON WITHOUT WRITTEN PERMISSION FROM DART AEROSPACE LTD.

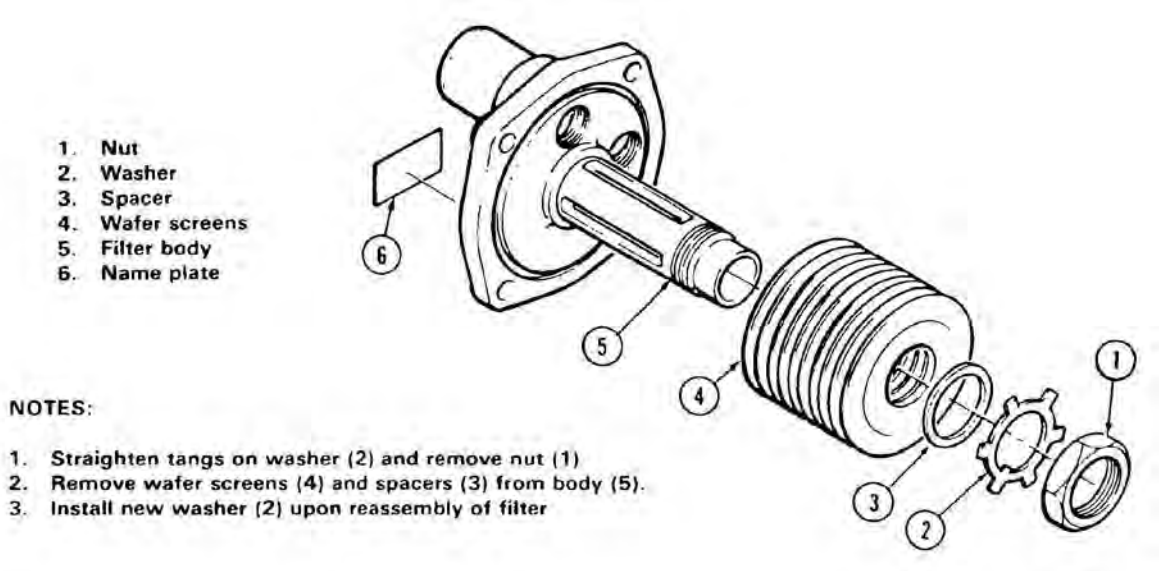

Figure 63-23. Sump Internal Filter

63.5.8 Full Flow Debris Monitor

The following procedures are applicable to helicopters S/N 31312 and subsequent and 35026 and subsequent and helicopters modified by T.B. 212-91-131.

63.5.8.1 Removal

63.5.8.1.1 Remove access door on right side of pylon support in cabin area.

63.5.8.1.2 Disconnect electrical harness (2, Figure 63-24).

63.5.8.1.3 Remove nuts (5),washers (4), and brackets (1 and 3).

63.5.8.1.4 Remove debris monitor from sump case.

63.5.8.1.5 Remove cup (8), scupper (7), and screen tube (10).

63.5.8.2 Cleaning

MATERIALS REQUIRED

Refer to BHT-ALL-SPM for specification and source.

NUMBER	NOMENCLATURE
C-304	Solvent

63.5.8.2.1 Wash chip detectors (9 and 10, Figure 63-24) and tube (10) with solvent (C-304).

63.5.8.2.2 Dry with filtered, compressed air.

63.5.8.3 Inspection

63.5.8.3.1 Inspect chip detectors and screen tube (9 and 10, Figure 63-24) and screen tube (10) for metal particles and/or other material. If metal particles are found, refer to paragraph 63.1.2.

63.5.8.3.2 Inspect chip detectors and screen tube for distortion or tears. Damage which can be detected visually is not acceptable.

63.5.8.3.3 Inspect nuts (5) for corrosion and thread damage. Damage in excess of superficial

• COPYRIGHT © 2007 BY DART AEROSPACE LTD. •
THIS DOCUMENT IS PRIVATE AND CONFIDENTIAL AND IS SUPPLIED ON THE EXPRESS CONDITION THAT IT IS NOT TO BE USED FOR ANY PURPOSE OR COPIED OR COMMUNICATED TO ANY OTHER PERSON WITHOUT WRITTEN PERMISSION FROM DART AEROSPACE LTD.

is not acceptable.

63.5.8.4 Installation

63.5.8.4.1 Lubricate new packings (6 and 11, Figure 63-24) with transmission oil (Chapter 12).

63.5.8.4.2 Install packings on debris monitor.

63.5.8.4.3 Install screen tube (10), scupper (7), and cap (8) on debris monitor.

63.5.8.4.4 Torque cap (8) 22 to 30 inch-lbs. (2.5 to 3.4 Nm).

63.5.8.4.5 Install debris monitor in transmission sump case.

63.5.8.4.6 Install brackets (1 and 3) using washers (4) and nuts (5).

63.5.8.4.7 Torque nuts (5) 50 to 70 inch-lbs. (5.6 to 7.0 Nm).

63.5.8.4.8 Install electrical harness (2).

63.5.8.4.9 Perform operational check (Chapter 96).

63.5.8.4.10 Install access door on right side of pylon support in cabin area.

63.5.8.4.11 Check for oil leaks at next helicopter ground run.

• COPYRIGHT © 2007 BY DART AEROSPACE LTD. •
THIS DOCUMENT IS PRIVATE AND CONFIDENTIAL AND IS SUPPLIED ON THE EXPRESS CONDITION THAT IT IS NOT TO BE USED FOR ANY PURPOSE OR COPIED OR COMMUNICATED TO ANY OTHER PERSON WITHOUT WRITTEN PERMISSION FROM DART AEROSPACE LTD.

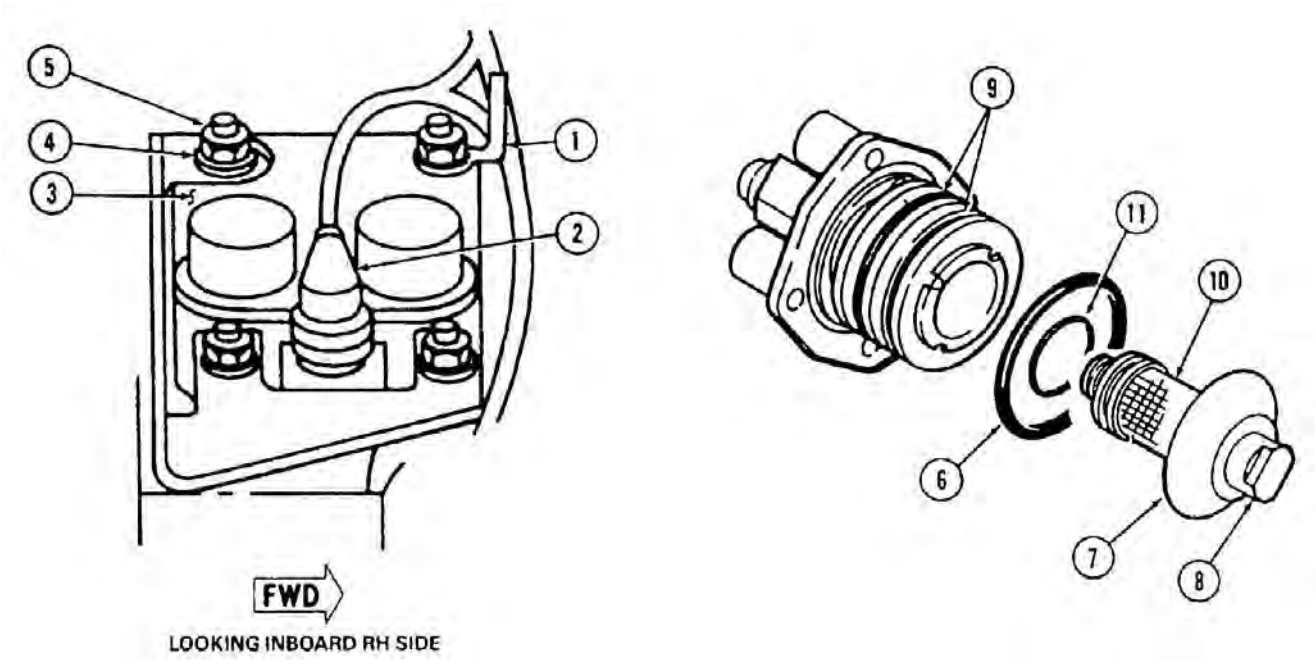

1. Bracket
2. Electrical harness
3. Bracket
4. Washer
5. Nut
6. Packing
7. Scupper
8. Cap
9. Chip detector
10. Screen Tube
11. Packing

Figure 63-24. Full Flow Debris Monitor

• COPYRIGHT © 2007 BY DART AEROSPACE LTD. •
THIS DOCUMENT IS PRIVATE AND CONFIDENTIAL AND IS SUPPLIED ON THE EXPRESS CONDITION THAT IT IS NOT TO BE USED FOR ANY PURPOSE OR COPIED OR COMMUNICATED TO ANY OTHER PERSON WITHOUT WRITTEN PERMISSION FROM DART AEROSPACE LTD.

63.5.9 Transmission External Oil Filter

A second filter (25, Figure 63-13) in the transmission oil system is located inside the right pylon support below the sump case, connected in the return line from the cooler. The replaceable filter element is pleated-paper type, and the filter head has a bypass valve to ensure oil flow in event of clogging, with a visual red indicator which extends if bypass condition is impending.

63.5.9.1 Removal

63.5.9.1.1 Remove access door on front of pylon support in cabin area.

63.5.9.1.2 Place a suitable container under external filter body (19, Figure 63-25) to catch spilled oil.

63.5.9.1.3 Open V-band clamp (14) and remove filter body (19).

63.5.9.1.4 Remove filter element (17).

63.5.9.1.5 Inspect filter element (17) for contamination and metal particles.

63.5.9.1.6 If necessary, remove filter head (13) by disconnecting oil tube (20) and hose (5) and removing bolts (3), washers (4), and spacers (24) to detach head (13) from bracket (25).

63.5.9.2 Inspection and cleaning

MATERIALS REQUIRED

Refer to BHT-ALL-SPM for specification and source.

NUMBER	NOMENCLATURE
C-304	Solvent

63.5.9.2.1 Clean filter body (19, Figure 63-25) and filter head (13), if removed, with solvent (C-304).

63.5.9.2.2 Dry with filtered, compressed air.

63.5.9.2.3 Inspect filter body flange and filter head flange for cracks. Any evidence of cracks necessitates replacement of filter.

63.5.9.3 Installation

63.5.9.3.1 Install filter head (13, Figure 63-25) (if removed) with outlet port aft. Use four spacers (24) between bracket (25) and head (13), and secure with bolts (3), washers (4), and lockwire (C-405). Remove plugs and caps and connect oil tube (20) from cooler to reducer (21) in filter inlet. Connect transmission hose (5) to fitting (6) in filter outlet.

63.5.9.3.2 Lubricate a new packing (18) with transmission oil (Chapter 12) and place on boss inside bottom of filter body (19). Insert new filter element (17) and seat firmly on boss. Place a new, lubricated packing (15) around upper lip of body next to flange.

63.5.9.3.3 Install a new, lubricated packing (16) around center boss in underside of filter head.

63.5.9.3.4 Insert oil filter body (19) into filter head (13), pressing upward until seated.

63.5.9.3.5 Install V-band clamp (14) around mating flanges of filter head and body. Tighten nut to 50 inch-lbs. (5.65 Nm) torque, while tapping lightly around clamp to aid seating.

• COPYRIGHT © 2007 BY DART AEROSPACE LTD. •
THIS DOCUMENT IS PRIVATE AND CONFIDENTIAL AND IS SUPPLIED ON THE EXPRESS CONDITION THAT IT IS NOT TO BE USED FOR ANY PURPOSE OR COPIED OR COMMUNICATED TO ANY OTHER PERSON WITHOUT WRITTEN PERMISSION FROM DART AEROSPACE LTD.

1. Thin aluminum washers (4 places)
2. Bolt (4 places)
3. Bolt (4 places)
4. Thin aluminum washers (4 places)
5. Outlet hose
6. Fitting
7. Packing
8. Elbow
9. Packing
10. Checknut
11. Union
12. Packing
13. Filter head
14. V-band clamp
15. Packing
16. Packing
17. Filter element
18. Packing
19. External oil filter body
20. Inlet tube
21. Reducer
22. Packing
23. Bypass indicator
24. Spacer (4 places)
25. Filter bracket

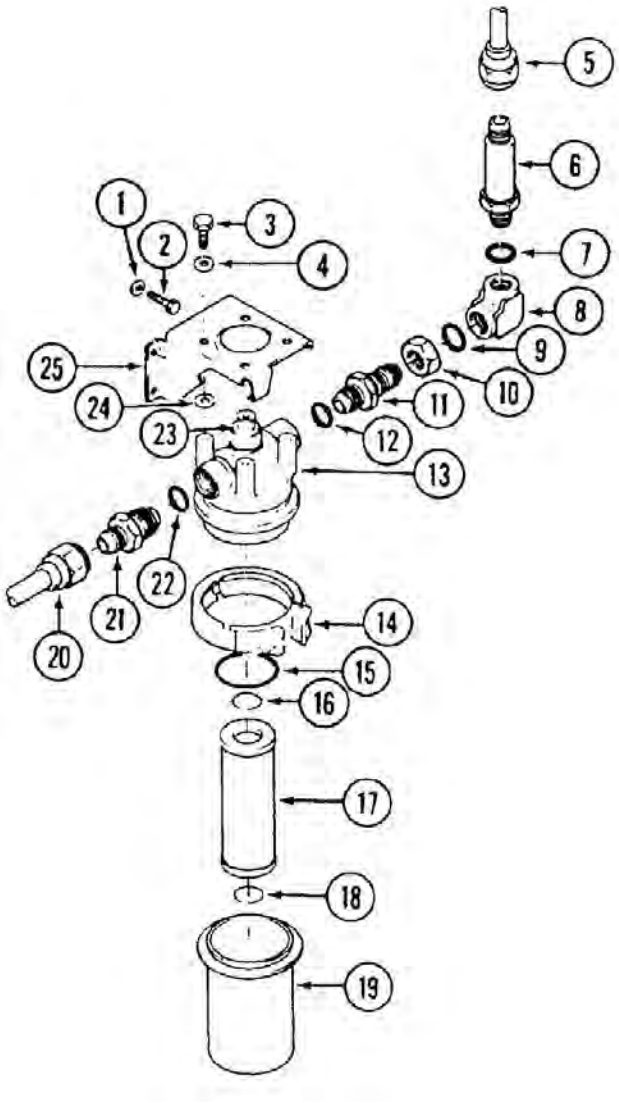

Figure 63-25. Transmission External Oil Filter

• COPYRIGHT © 2007 BY DART AEROSPACE LTD. •
THIS DOCUMENT IS PRIVATE AND CONFIDENTIAL AND IS SUPPLIED ON THE EXPRESS CONDITION THAT IT IS NOT TO BE USED FOR ANY PURPOSE OR COPIED OR COMMUNICATED TO ANY OTHER PERSON WITHOUT WRITTEN PERMISSION FROM DART AEROSPACE LTD.

63.5.10 Transmission Planetary Oil Jets

Two oil jets (8, Figure 63-26) are installed in the planetary gear case of transmission to provide positive lubrication to planetary gearing.

63.5.10.1 Removal

NOTE

The jet on forward side of transmission is shown in Figure 63-26. Maintenance procedures for jet on left side of transmission are similar.

63.5.10.1.1 Disconnect tube (2).

63.5.10.1.2 Remove screw (7) and remove jet (8).

63.5.10.1.3 Disassemble jet as follows:

63.5.10.1.3.1 Loosen nut (5) and remove fitting (4) with packing (6).

63.5.10.1.3.2 Remove and discard packings (1 and 6).

63.5.10.2 Cleaning

MATERIALS REQUIRED

Refer to BHT-ALL-SPM for specification and source.

NUMBER	NOMENCLATURE
C-304	Solvent

63.5.10.2.1 Wash jets using solvent (C-304).

63.5.10.2.2 Dry with filtered, compressed air.

63.5.10.3 Inspection

63.5.10.3.1 Inspect jet for clogging. If passages are clogged, determine source(s) of material (paragraph 63.1.2.1).

63.5.10.3.2 Inspect for corrosion. Superficial corrosion damage on plate on exterior of transmission is acceptable if removed.

63.5.10.3.3 Inspect for mechanical damage. Cracks and distortion are not acceptable.

63.5.10.4 Repair

Repair of jets is limited to removal of corrosion products from plate at base of jet on exterior of transmission.

63.5.10.5 Installation

63.5.10.5.1 Coat new packing (1, Figure 63-26) with transmission oil (Chapter 12). Install packing on jet (8).

63.5.10.5.2 Coat new packing (6) with transmission oil and install on fitting (4).

63.5.10.5.3 Install fitting (4) on jet (8).

63.5.10.5.4 Insert jet into housing and install screw (7). Secure screw to jet (8) with lockwire (C-405).

63.5.10.5.5 Connect tube (2) and tighten nut (3).

63.5.10.5.6 Check for oil leaks at next helicopter ground run.

• COPYRIGHT © 2007 BY DART AEROSPACE LTD. •
THIS DOCUMENT IS PRIVATE AND CONFIDENTIAL AND IS SUPPLIED ON THE EXPRESS CONDITION THAT IT IS NOT TO BE USED FOR ANY PURPOSE OR COPIED OR COMMUNICATED TO ANY OTHER PERSON WITHOUT WRITTEN PERMISSION FROM DART AEROSPACE LTD.

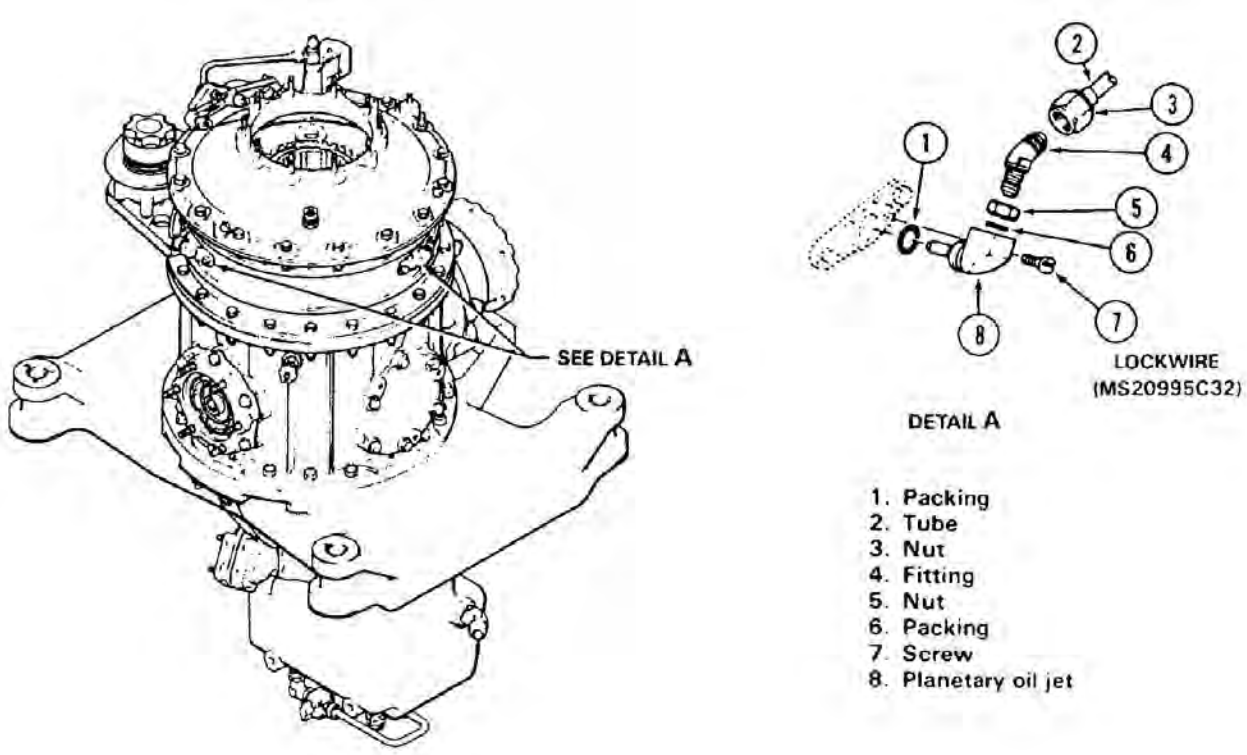

Figure 63-26. Planetary Oil Jet

• COPYRIGHT © 2007 BY DART AEROSPACE LTD. •
THIS DOCUMENT IS PRIVATE AND CONFIDENTIAL AND IS SUPPLIED ON THE EXPRESS CONDITION THAT IT IS NOT TO BE USED FOR ANY PURPOSE OR COPIED OR COMMUNICATED TO ANY OTHER PERSON WITHOUT WRITTEN PERMISSION FROM DART AEROSPACE LTD.

63.5.11 Transmission Oil Jet No. 1

63.5.11.1 Removal

63.5.11.1.1 Remove screw (9, Figure 63-27) and pull out oil jet (6).

63.5.11.1.2 Remove screw (3) and washer (4) and 5).

63.5.11.1.3 Remove and discard packings (7 and 8).

63.5.11.2 Cleaning

Refer to paragraph 63.5.10.2

63.5.11.3 Inspection

Refer to paragraph 63.5.10.3

63.5.11.4 Repair

Refer to paragraph 63.5.10.4

63.5.11.5 Installation

MATERIALS REQUIRED

Refer to BHT-ALL-SPM for specification and source.

NUMBER	NOMENCLATURE
C-405	Lockwire

63.5.11.5.1 Install screw (3, Figure 63-27) with washers (4 and 5) on jet (6).

63.5.11.5.2 Lubricate new packings (7 and 8) with transmission oil (Chapter 12) and install in grooves of jet.

63.5.11.5.3 Carefully insert jet (6) into housing in transmission.

63.5.11.5.4 Install screw (9). Secure screw (9) to screw (3) using lockwire (C-405).

63.5.11.5.5 Check for oil leaks at next helicopter ground run.

• COPYRIGHT © 2007 BY DART AEROSPACE LTD. •
THIS DOCUMENT IS PRIVATE AND CONFIDENTIAL AND IS SUPPLIED ON THE EXPRESS CONDITION THAT IT IS NOT TO BE USED FOR ANY PURPOSE OR COPIED OR COMMUNICATED TO ANY OTHER PERSON WITHOUT WRITTEN PERMISSION FROM DART AEROSPACE LTD.

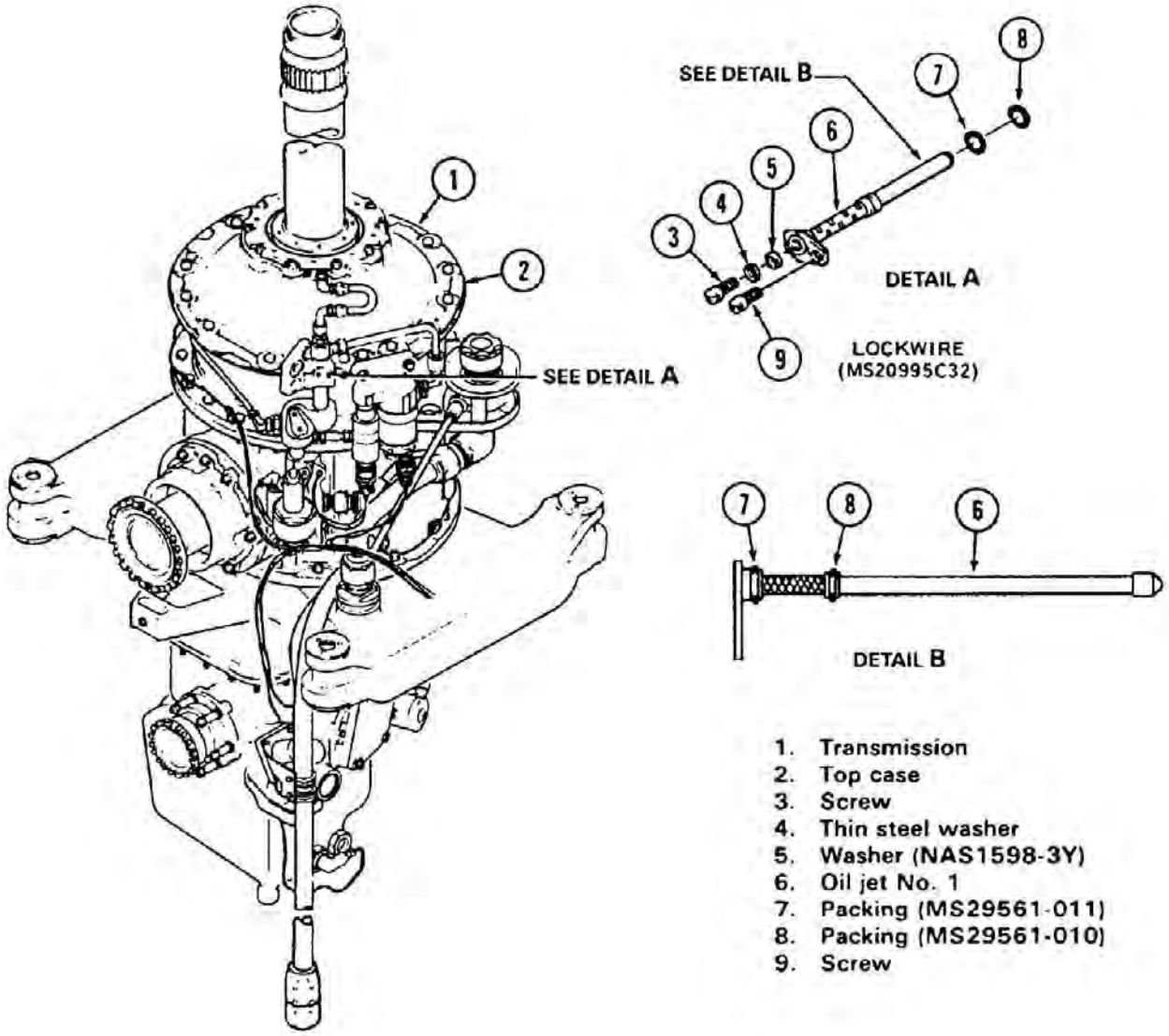

Figure 63-27. Transmission Oil Jet No. 1

• COPYRIGHT © 2007 BY DART AEROSPACE LTD. •
THIS DOCUMENT IS PRIVATE AND CONFIDENTIAL AND IS SUPPLIED ON THE EXPRESS CONDITION THAT IT IS NOT TO BE USED FOR ANY PURPOSE OR COPIED OR COMMUNICATED TO ANY OTHER PERSON WITHOUT WRITTEN PERMISSION FROM DART AEROSPACE LTD.

63.5.12 Transmission Oil Jet No. 2

63.5.12.1 Removal

63.5.12.1.1 Remove screw (1, Figure 63-28) and pull out oil jet (4).

63.5.12.1.2 Remove screw (7) and washers (5 and 6).

63.5.12.1.3 Remove and discard packings (2 and 3).

63.5.12.2 Cleaning

Refer to paragraph 63.5.10.2.

63.5.12.3 Inspection

Refer to paragraph 63.5.10.3.

63.5.12.4 Repair

Refer to paragraph 63.5.10.4.

63.5.12.5 Installation

MATERIALS REQUIRED

Refer to BHT-ALL-SPM for specification and source.

NUMBER	NOMENCLATURE
C-405	Lockwire

63.5.12.5.1 Install screw (7, Figure 63-28) with washers (5 and 6) on jet (4).

63.5.12.5.2 Lubricate new packings (2 and 3) with transmission oil (Chapter 12) and install in grooves of jet.

63.5.12.5.3 Carefully insert jet (4) into housing in transmission.

63.5.12.5.4 Install screw (1). Secure screw (1) to screw (7) using lockwire (C-405).

63.5.12.5.5 Check for oil leaks at next helicopter ground run.

• COPYRIGHT © 2007 BY DART AEROSPACE LTD. •
THIS DOCUMENT IS PRIVATE AND CONFIDENTIAL AND IS SUPPLIED ON THE EXPRESS CONDITION THAT IT IS NOT TO BE USED FOR ANY PURPOSE OR COPIED OR COMMUNICATED TO ANY OTHER PERSON WITHOUT WRITTEN PERMISSION FROM DART AEROSPACE LTD.

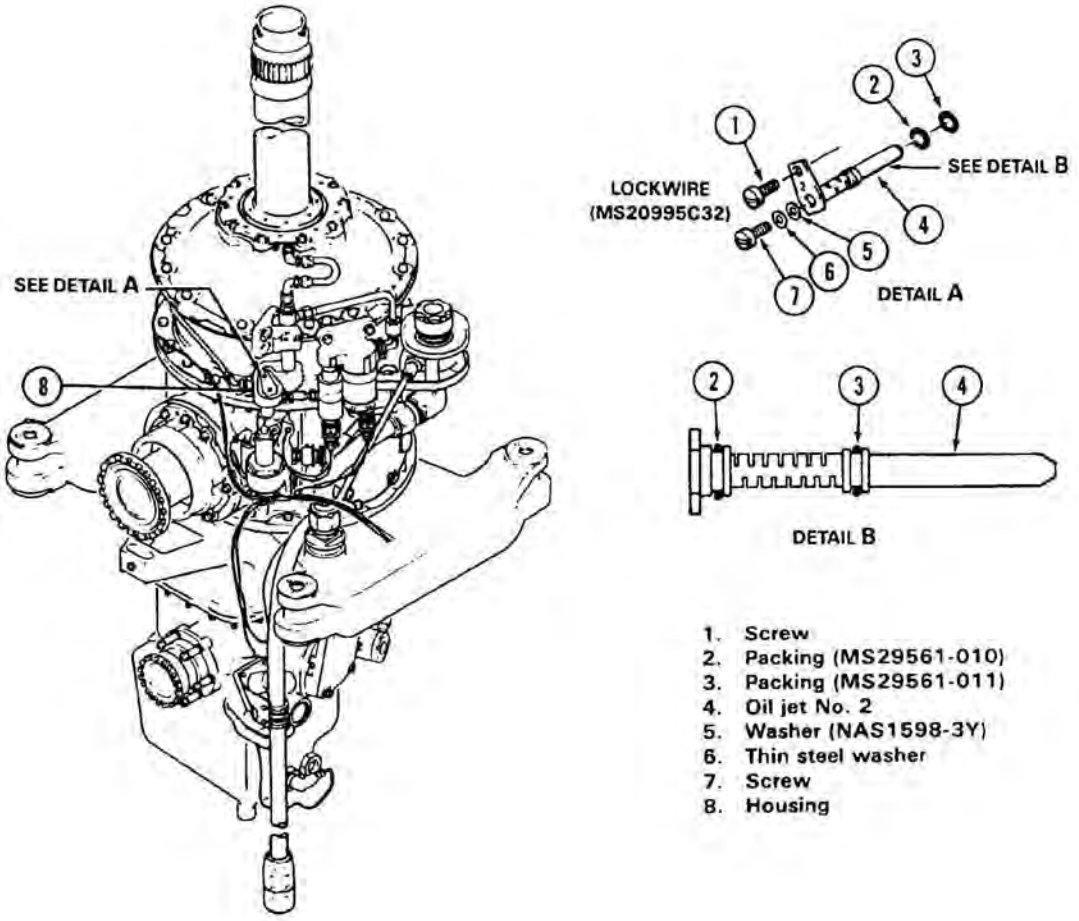

Figure 63-28. Transmission Oil Jet No. 2

• COPYRIGHT © 2007 BY DART AEROSPACE LTD. •
THIS DOCUMENT IS PRIVATE AND CONFIDENTIAL AND IS SUPPLIED ON THE EXPRESS CONDITION THAT IT IS NOT TO BE USED FOR ANY PURPOSE OR COPIED OR COMMUNICATED TO ANY OTHER PERSON WITHOUT WRITTEN PERMISSION FROM DART AEROSPACE LTD.

63.5.13 Transmission Oil Jet No. 3

63.5.13.1 Removal

63.5.13.1.1 Remove bolt (1, Figure 63-29), washer (2), and bracket (3).

63.5.13.1.2 Remove jet (7) with packings (4, 5, and 6). Discard packings.

63.5.13.1.3 Remove screw (10) and washers (8 and 9).

63.5.13.2 Cleaning

Refer to paragraph 63.5.10.2.

63.5.13.3 Inspection

Refer to paragraph 63.5.10.3.

63.5.13.4 Repair

Refer to paragraph 63.5.10.4.

63.5.13.5 Installation

MATERIALS REQUIRED

Refer to BHT-ALL-SPM for specification and source.

NUMBER	NOMENCLATURE
C-405	Lockwire

63.5.13.5.1 Install screw (10, Figure 63-29) with washers (8 and 9) on jet (7).

63.5.13.5.2 Lubricate new packings (4, 5, and 6) with transmission oil (Chapter 12) and install in grooves of jet.

63.5.13.5.3 Carefully insert jet (7) into manifold (11).

63.5.13.5.4 Install bolt (1), washer (2), and bracket (3). Torque bolt (1) 50 to 70 inch-lbs. (5.7 to 7.9 Nm). Secure bolt (1) to screw (10) using lockwire (C-405).

63.5.13.5.5 Check for oil leaks at next helicopter ground run.

• COPYRIGHT © 2007 BY DART AEROSPACE LTD. •
THIS DOCUMENT IS PRIVATE AND CONFIDENTIAL AND IS SUPPLIED ON THE EXPRESS CONDITION THAT IT IS NOT TO BE USED FOR ANY PURPOSE OR COPIED OR COMMUNICATED TO ANY OTHER PERSON WITHOUT WRITTEN PERMISSION FROM DART AEROSPACE LTD.

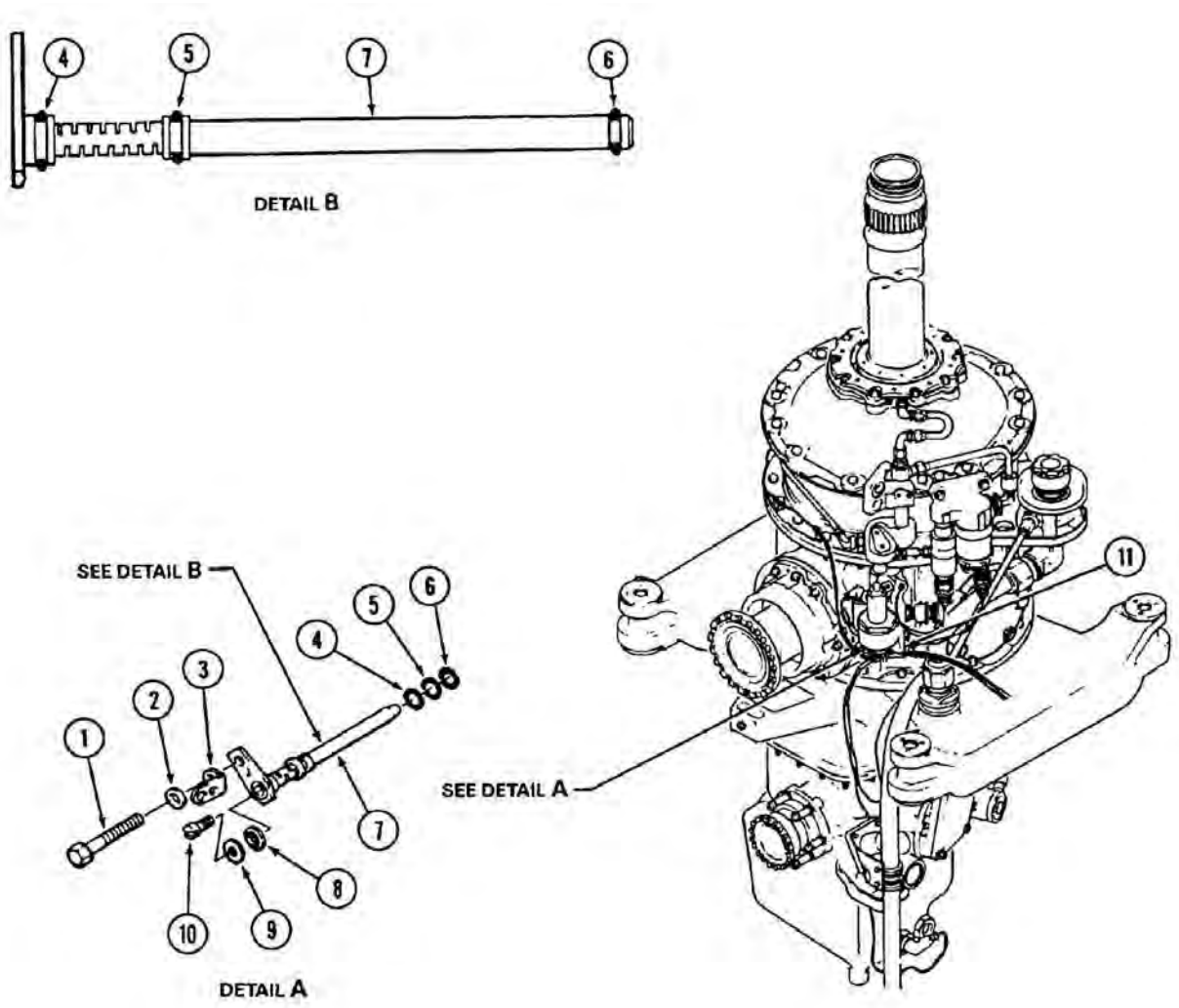

1. Bolt
2. Thin steel washer
3. Bracket
4. Packing (MS29561-011)
5. Packing (MS29561-010)
6. Packing (MS29561-008)
7. No. 3 oil jet
8. Washer (NAS1598-3Y)
9. Thin steel washer
10. Screw
11. Manifold

Figure 63-29. Transmission Oil Jet No. 3

• COPYRIGHT © 2007 BY DART AEROSPACE LTD. •
THIS DOCUMENT IS PRIVATE AND CONFIDENTIAL AND IS SUPPLIED ON THE EXPRESS CONDITION THAT IT IS NOT TO BE USED FOR ANY PURPOSE OR COPIED OR COMMUNICATED TO ANY OTHER PERSON WITHOUT WRITTEN PERMISSION FROM DART AEROSPACE LTD.

63.5.14 Transmission Oil Jet No. 4

63.5.14.1 Removal

63.5.14.1.1 Remove access door on right side of pylon support in cabin.

63.5.14.1.2 Remove screw (8,Figure 63-30).

NOTE

When removing jet (4) from sump case, ensure packings (2 and 3) are extracted with the oil jet.

63.5.14.1.3 Extract jet (4) with packings (2 and 3) from sump case (1). Discard packings.

63.5.14.1.4 Remove screw (7) and washers (5 and 6).

63.5.14.2 Cleaning

Refer to paragraph 63.5.10.2.

63.5.14.3 Inspection

Refer to paragraph 63.5.10.3.

63.5.14.4 Repair

Refer to paragraph 63.5.10.4.

63.5.14.5 Installation

63.5.14.5.1 Install screw (7, Figure 63-30) with washers (5 and 6) on jet (4).

63.5.14.5.2 Lubricate new packings (2 and 3) with transmission oil (Chapter 12) and install in grooves of jet.

63.5.14.5.3 Carefully insert jet (4) into sump case (1).

63.5.14.5.4 Install screw (8) through jet and into sump case. Secure screw (8) using lockwire (C-405).

63.5.14.5.5 Check for oil leaks at next helicopter ground run.

• COPYRIGHT © 2007 BY DART AEROSPACE LTD. •
THIS DOCUMENT IS PRIVATE AND CONFIDENTIAL AND IS SUPPLIED ON THE EXPRESS CONDITION THAT IT IS NOT TO BE USED FOR ANY PURPOSE OR COPIED OR COMMUNICATED TO ANY OTHER PERSON WITHOUT WRITTEN PERMISSION FROM DART AEROSPACE LTD.

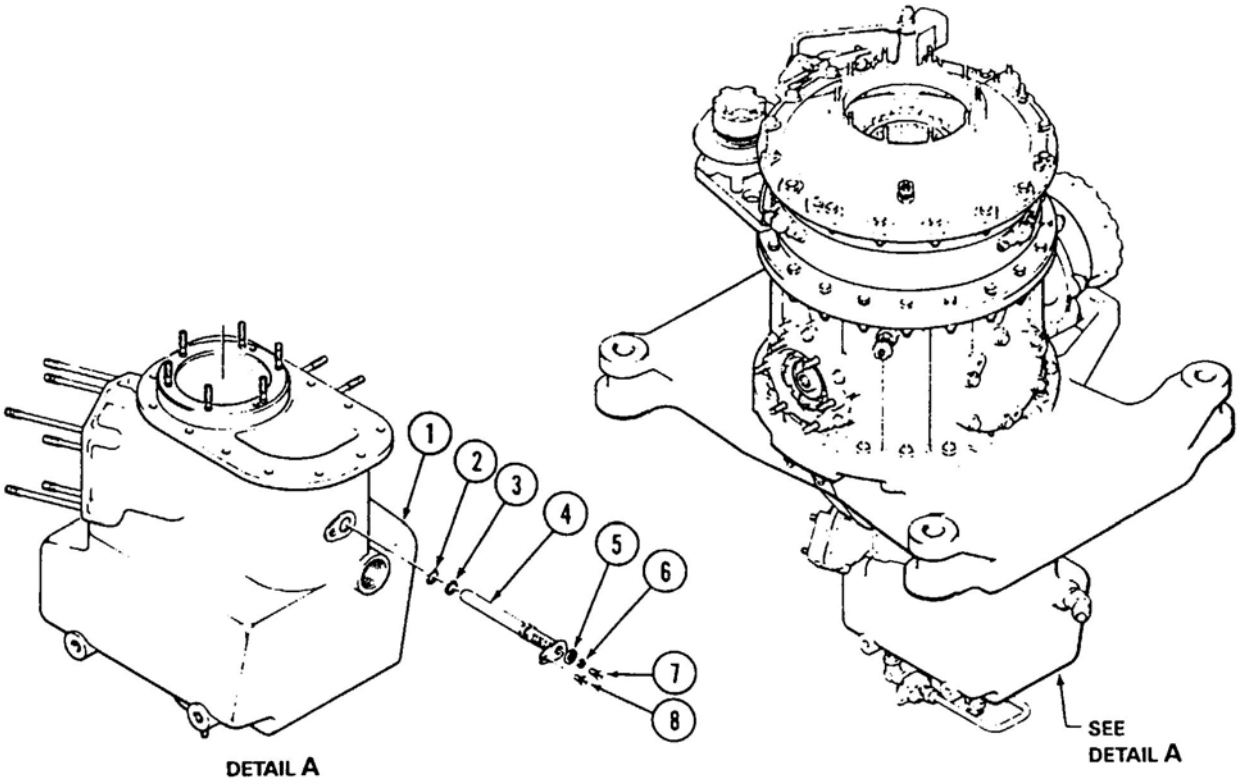

1. Sump case
2. Packing (MS29561-010)
3. Packing (MS29561-011)
4. Oil jet No. 4
5. Washer (NAS1598-3Y)
6. Thin steel washer
7. Screw
8. Screw

Figure 63-30. Transmission Oil Jet No. 4

• COPYRIGHT © 2007 BY DART AEROSPACE LTD. •
THIS DOCUMENT IS PRIVATE AND CONFIDENTIAL AND IS SUPPLIED ON THE EXPRESS CONDITION THAT IT IS NOT TO BE USED FOR ANY PURPOSE OR COPIED OR COMMUNICATED TO ANY OTHER PERSON WITHOUT WRITTEN PERMISSION FROM DART AEROSPACE LTD.

63.5.15 Transmission Oil Jet No. 5

63.5.15.1 Removal

63.5.15.1.1 Remove screw (4, Figure 63-31).

63.5.15.1.2 Extract jet (3) with packings (1 and 2).

63.5.15.1.3 Discard packing (2 and 3).

63.5.15.1.4 Remove screw (5) and washers (6 and 7).

63.5.15.2 Cleaning

Refer to paragraph 63.5.10.2.

63.5.15.3 Inspection

Refer to paragraph 63.5.10.3.

63.5.15.4 Repair

Refer to paragraph 63.5.10.4.

63.5.15.5 Installation

MATERIALS REQUIRED

Refer to BHT-ALL-SPM for specification and source.

NUMBER	NOMENCLATURE
C-405	Lockwire

63.5.15.5.1 Install screw (5, Figure 63-31) with washers (6 and 7) on jet (3).

63.5.15.5.2 Lubricate new packings (1 and 2) with transmission oil (Chapter 12) and install in grooves of jet.

63.5.15.5.3 Carefully insert jet (3) into transmission case.

63.5.15.5.4 Install screw (4).

63.5.15.5.5 Secure screw (5) to screw (4) with lockwire (C-405).

63.5.15.5.6 Check for oil leaks at next helicopter ground run.

• COPYRIGHT © 2007 BY DART AEROSPACE LTD. •
THIS DOCUMENT IS PRIVATE AND CONFIDENTIAL AND IS SUPPLIED ON THE EXPRESS CONDITION THAT IT IS NOT TO BE USED FOR ANY PURPOSE OR COPIED OR COMMUNICATED TO ANY OTHER PERSON WITHOUT WRITTEN PERMISSION FROM DART AEROSPACE LTD.

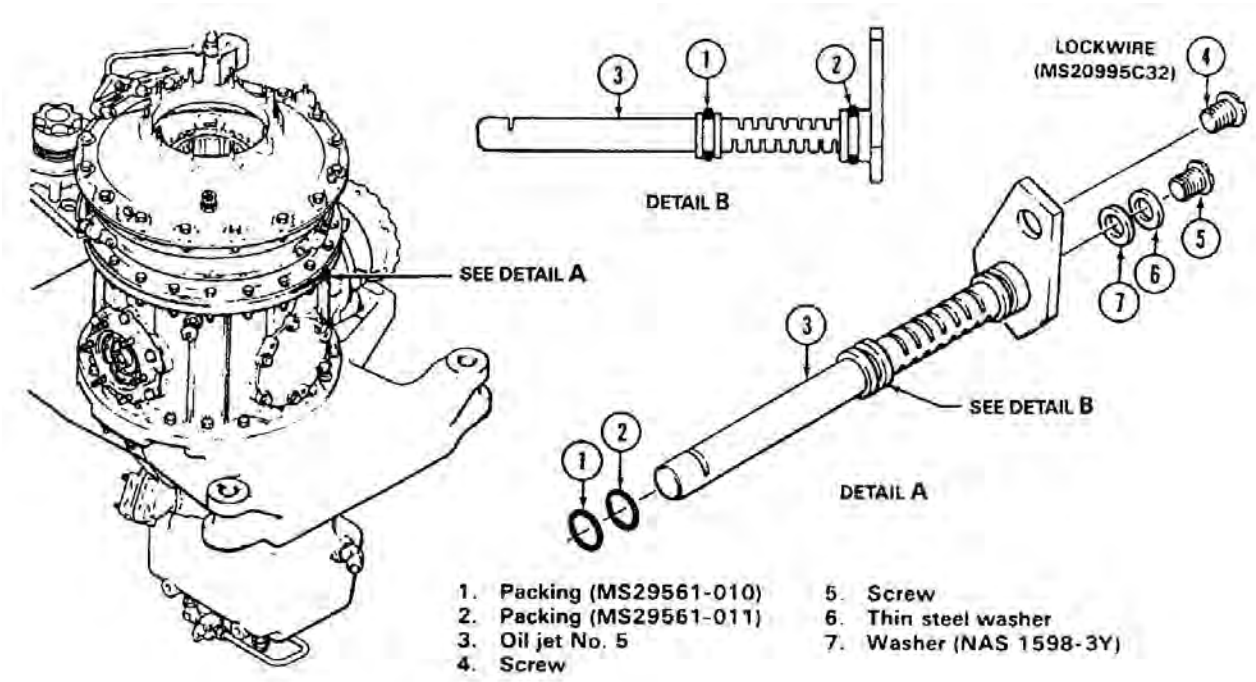

Figure 63-31. Transmission Oil Jet No. 5

• COPYRIGHT © 2007 BY DART AEROSPACE LTD. •
THIS DOCUMENT IS PRIVATE AND CONFIDENTIAL AND IS SUPPLIED ON THE EXPRESS CONDITION THAT IT IS NOT TO BE USED FOR ANY PURPOSE OR COPIED OR COMMUNICATED TO ANY OTHER PERSON WITHOUT WRITTEN PERMISSION FROM DART AEROSPACE LTD.

63.5.16 Transmission Oil Jet No. 6

63.5.16.1 Removal

63.5.16.1.1 Remove screw (7, Figure 63-32).

63.5.16.1.2 Extract jet (8) with packings (1, 2, and 3). Discard packings.

63.5.16.1.3 Remove screw (6) and washers (4 and 5).

63.5.16.2 Cleaning

Refer to paragraph 63.5.10.2.

63.5.16.3 Inspection

Refer to paragraph 63.5.10.3.

63.5.16.4 Repair

Refer to paragraph 63.5.10.4.

63.5.16.5 Installation

MATERIALS REQUIRED

Refer to BHT-ALL-SPM for specification and source.

NUMBER	NOMENCLATURE
C-405	Lockwire

63.5.16.5.1 Install screw (6, Figure 63-32) with washers (4 and 5) on jet (8).

63.5.16.5.2 Lubricate new packings (1, 2, and 3) with transmission oil (Chapter 12) and install in grooves of jet.

63.5.16.5.3 Carefully insert jet (8) into transmission case.

63.5.16.5.4 Install screw (7).

63.5.16.5.5 Secure screw (7) to screw (6) with lockwire (C-405).

63.5.16.5.6 Check for oil leaks at next helicopter ground run.

• COPYRIGHT © 2007 BY DART AEROSPACE LTD. •
THIS DOCUMENT IS PRIVATE AND CONFIDENTIAL AND IS SUPPLIED ON THE EXPRESS CONDITION THAT IT IS NOT TO BE USED FOR ANY PURPOSE OR COPIED OR COMMUNICATED TO ANY OTHER PERSON WITHOUT WRITTEN PERMISSION FROM DART AEROSPACE LTD.

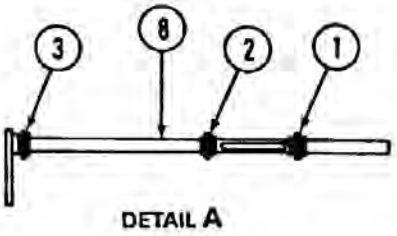

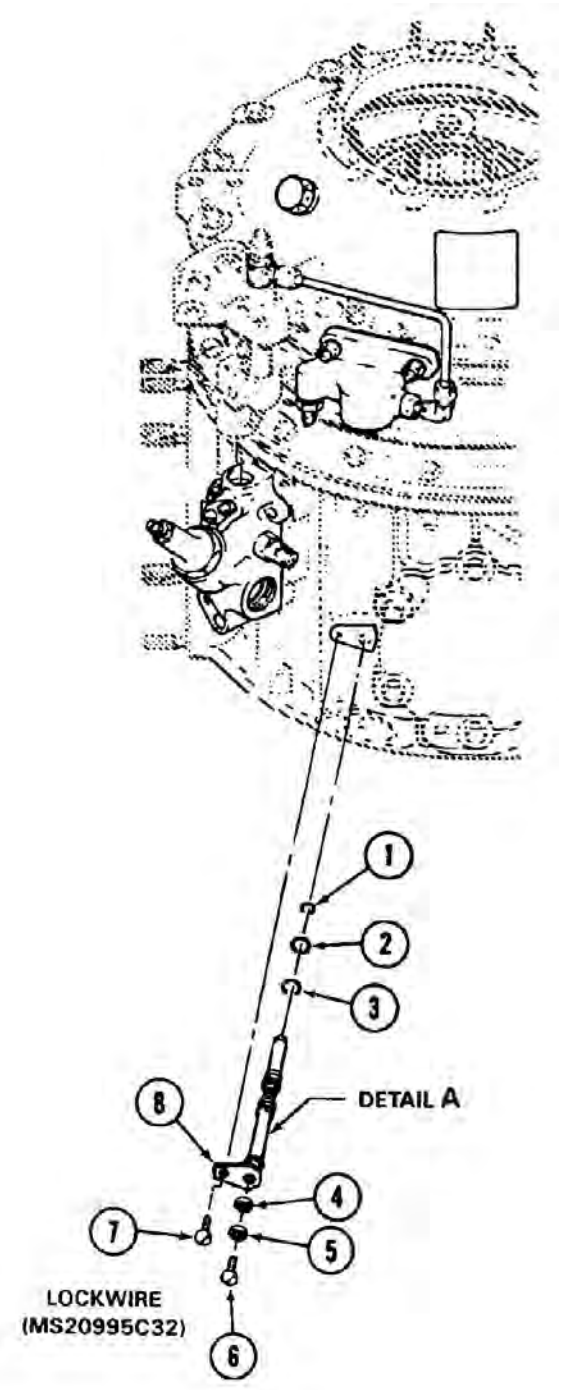

1. Packing (MS29561-010)
2. Packing (MS29561-011)
3. Packing (MS29561-011)
4. Washer (NAS1598-3Y)
5. Thin Steel Washer
6. Screw
7. Screw
8. Oil Jet No. 6

Figure 63-32. Transmission Oil Jet No. 6

• COPYRIGHT © 2007 BY DART AEROSPACE LTD. •
THIS DOCUMENT IS PRIVATE AND CONFIDENTIAL AND IS SUPPLIED ON THE EXPRESS CONDITION THAT IT IS NOT TO BE USED FOR ANY PURPOSE OR COPIED OR COMMUNICATED TO ANY OTHER PERSON WITHOUT WRITTEN PERMISSION FROM DART AEROSPACE LTD.

63.5.17 Transmission Oil Jet No. 7

63.5.17.1 Removal

63.5.17.1.1 Remove valve (1, Figure 63-33) with packing (2). Discard packing.

63.5.17.1.2 Remove screw (8) and washer (7).

63.5.17.1.3 Extract jet (6) with packings (3, 4, and 5). Discard packings.

63.5.17.1.4 Remove screw (9) and seal (10). Discard seal (10).

63.5.17.2 Cleaning

Refer to paragraph 63.5.10.2.

63.5.17.3 Inspection

Refer to paragraph 63.5.10.3.

63.5.17.4 Repair

Refer to paragraph 63.5.10.4.

63.5.17.5 Installation

MATERIALS REQUIRED

Refer to BHT-ALL-SPM for specification and source.

NUMBER	NOMENCLATURE
C-405	Lockwire

63.5.17.5.1 Install screw (9, Figure 63-33) with new seal (10).

63.5.17.5.2 Lubricate new packings (3, 4, and 5) with transmission oil (Chapter 12) and install in grooves of jet.

63.5.17.5.3 Carefully insert jet (6) into transmission case.

63.5.17.5.4 Install screw (8) and washer (7).

63.5.17.5.5 Secure screw (8) to screw (9) with lockwire (C-405).

63.5.17.5.6 Lubricate new packing (2) with transmission oil (Chapter 12) and install on valve (1).

63.5.17.5.7 Install valve (1) in manifold.

63.5.17.5.8 Secure valve (1) to thermoswitch (11) and thermobulb (12) with lockwire (C-405).

63.5.17.5.9 Check for oil leaks at next helicopter ground run.

• COPYRIGHT © 2007 BY DART AEROSPACE LTD. •
THIS DOCUMENT IS PRIVATE AND CONFIDENTIAL AND IS SUPPLIED ON THE EXPRESS CONDITION THAT IT IS NOT TO BE USED FOR ANY PURPOSE OR COPIED OR COMMUNICATED TO ANY OTHER PERSON WITHOUT WRITTEN PERMISSION FROM DART AEROSPACE LTD.

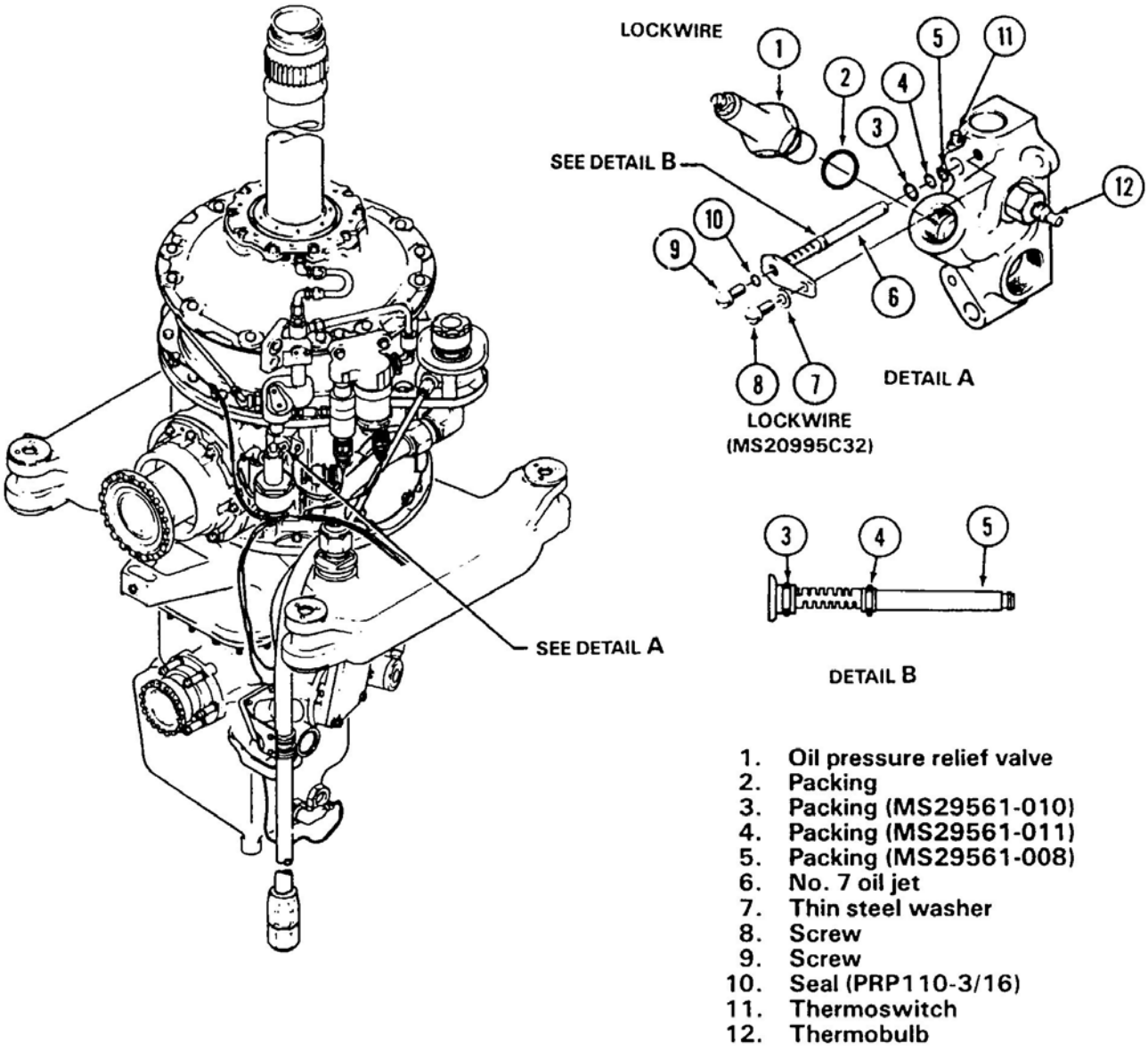

Figure 63-33. Transmission Oil Jet No. 7

• COPYRIGHT © 2007 BY DART AEROSPACE LTD. •
THIS DOCUMENT IS PRIVATE AND CONFIDENTIAL AND IS SUPPLIED ON THE EXPRESS CONDITION THAT IT IS NOT TO BE USED FOR ANY PURPOSE OR COPIED OR COMMUNICATED TO ANY OTHER PERSON WITHOUT WRITTEN PERMISSION FROM DART AEROSPACE LTD.

63.5.18 Transmission Oil Pump Screen

The transmission oil pump intake screen is a wire mesh cylinder attached on a threaded plug, located at lower right side of the sump case.

63.5.18.1 Removal

MATERIALS REQUIRED

Refer to BHT-ALL-SPM for specification and source.

NUMBER	NOMENCLATURE
C-304	Solvent

63.5.18.1.1 Remove oil level access door from right side of pylon support in cabin.

63.5.18.1.2 Drain transmission oil sump (Chapter 12).

63.5.18.1.3 Remove lockwire and loosen plug below PUMP SCREEN marking. Remove screen (1, Figure 63-34) and packing (2). Discard packing.

63.5.18.1.4 Inspect screen for metal particles or other contamination and for damage. (Figure 63-35).

63.5.18.1.5 Clean parts with solvent (C-304). Dry with filtered, compressed air.

63.5.18.2 Cleaning

MATERIALS REQUIRED

Refer to BHT-ALL-SPM for specification and source.

NUMBER	NOMENCLATURE
C-304	Solvent

63.5.18.2.1 Rinse screen with solvent (C-304).

63.5.18.2.2 Dry using filtered, compressed air.

63.5.18.3 Inspection

63.5.18.3.1 Inspect screen (1, Figure 63-34) for metal particles. If metal particles are present, refer to paragraph 63.1.2.

63.5.18.3.2 Inspect screen for damage in accordance with Figure 63-35.

63.5.18.4 Installation

MATERIALS REQUIRED

Refer to BHT-ALL-SPM for specification and source.

NUMBER	NOMENCLATURE
C-405	Lockwire

63.5.18.4.1. Install screen (1, Figure 63-35) with a new packing (2), into sump case (3). Torque screen assembly 300 to 400 inch-lbs. (33.90 to 45.19 Nm) and secure to adjacent chip detector plug with lockwire (C-405).

63.5.18.4.2 Install screen (1) on sump (3). Torque screen 300 to 400 inch-lbs. (33.90 to 45.19 Nm).

63.5.18.4.3 Secure screen to sump with lockwire (C-405).

63.5.18.4.4 Service transmission oil system (Chapter 12).

63.5.18.4.5 Install access door.

63.5.18.4.6 Check for oil leaks at next helicopter ground run.

• COPYRIGHT © 2007 BY DART AEROSPACE LTD. •
THIS DOCUMENT IS PRIVATE AND CONFIDENTIAL AND IS SUPPLIED ON THE EXPRESS CONDITION THAT IT IS NOT TO BE USED FOR ANY PURPOSE OR COPIED OR COMMUNICATED TO ANY OTHER PERSON WITHOUT WRITTEN PERMISSION FROM DART AEROSPACE LTD.

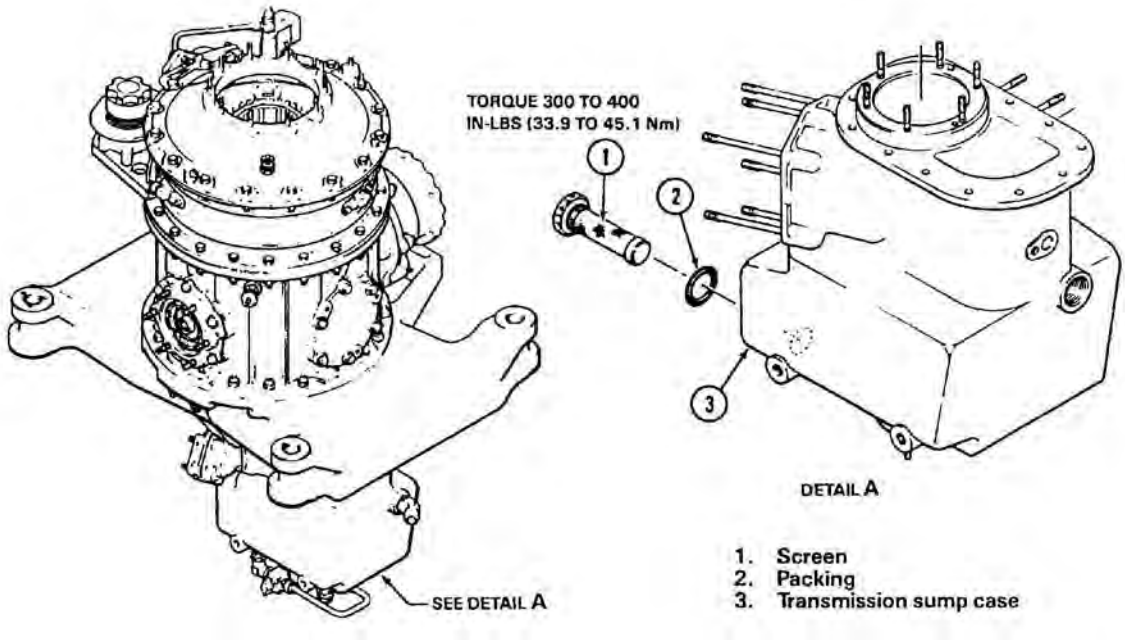

Figure 63-34. Transmission Oil Pump Screen

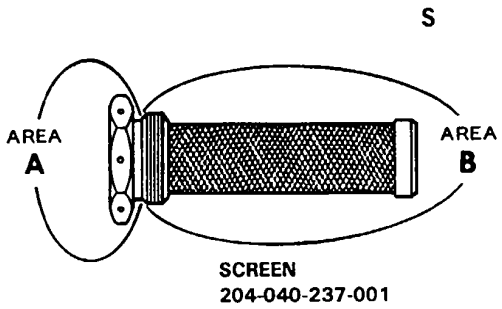

AREA	LIMITS
All	No cracks allowed.
A	Maximium depth of pitting is 0.030 inch (0.762 mm) with no more than 40 percent of any 1.0 inch (25.4 mm) square or 20 percent of any pitted surface.
B	Maximum depth of pitting is 0.020 inch (0.508 mm) with no more than 40 percent of any 1.0 inch (25.4 mm) square or 20 percent of total area of any pitted surface. Corrosion is not permitted on screen. Thread damage is not permitted.

Figure 63-35. Damage Limits – Oil Pump Inlet Screen

• COPYRIGHT © 2007 BY DART AEROSPACE LTD. •
THIS DOCUMENT IS PRIVATE AND CONFIDENTIAL AND IS SUPPLIED ON THE EXPRESS CONDITION THAT IT IS NOT TO BE USED FOR ANY PURPOSE OR COPIED OR COMMUNICATED TO ANY OTHER PERSON WITHOUT WRITTEN PERMISSION FROM DART AEROSPACE LTD.

63.5.19 Oil Temperature Manifold

63.5.19.1 Removal

63.5.19.1.1 Remove bolt (16, Figure 63-36), washer (17), and bracket (18).

63.5.19.1.2 Remove jet (14) and packings (11, 12, and 13). Discard packings.

63.5.19.1.3 Disconnect electrical connector from thermobulb (6).

63.5.19.1.4 Disconnect hose (9).

63.5.19.1.5 Disconnect electrical connector from the thermoswitch (23).

63.5.19.1.6 Remove bolt (19), washer (20), and bracket (21).

63.5.19.1.7 Cut sealant from around tube (2) using a sharp plastic scraper.

63.5.19.1.8 Carefully work manifold (24) loose and remove manifold with tube (2), packings (1, 3, 4, and 5), and gasket (25). Discard packings and gasket.

63.5.19.2 Installation

63.5.19.2.1 Coat new gasket (25, Figure 63-36) and all packings with transmission oil (Chapter 12).

63.5.19.2.2 If removed, coat new packing (10) with transmission oil and install in manifold (24). Install elbow (8) on manifold and tighten nut (7). Do not tighten at this time.

63.5.19.2.3 Lubricate new packings (1 and 3) and install on tube (2). Install tube in manifold (24)

63.5.19.2.4 Lubricate new packings (4 and 5) and install in manifold (24). Lubricate new gasket (25) and install on manifold.

63.5.19.2.5 Carefully work manifold assembly (24) into position. Ensure tube (2) is seated on oil jet no. 2 manifold and bushings on bottom of manifold are seated on transmission case.

63.5.19.2.6 Install bolt (19) with washer (20) and bracket (21).

63.5.19.2.7 Install jet (14) with new, lubricated packings (11, 12, and 13).

63.5.19.2.8 Install bolt (16) with washer (17) and bracket (18).

63.5.19.2.9 Torque bolts (16 and 19) 50 to 70 inch-lbs. (5.6 to 7.9 Nm). Secure bolt (16) to screw (15) and bolt (19) to thermobulb (6) with lockwire (C-405).

63.5.19.2.10 Install hose (9) on elbow (8). Tighten nut (7).

63.5.19.2.11 Connect electrical plug to thermobulb (6) and secure with lockwire (C-405).

63.5.19.2.12 Connect electrical wire to thermoswitch (23).

63.5.19.2.13 Apply a bead of adhesive (C-308) around each end of tube (2) at mating joint.

63.5.19.2.14 Check for oil leaks at next helicopter ground run.

• COPYRIGHT © 2007 BY DART AEROSPACE LTD. •
THIS DOCUMENT IS PRIVATE AND CONFIDENTIAL AND IS SUPPLIED ON THE EXPRESS CONDITION THAT IT IS NOT TO BE USED FOR ANY PURPOSE OR COPIED OR COMMUNICATED TO ANY OTHER PERSON WITHOUT WRITTEN PERMISSION FROM DART AEROSPACE LTD.

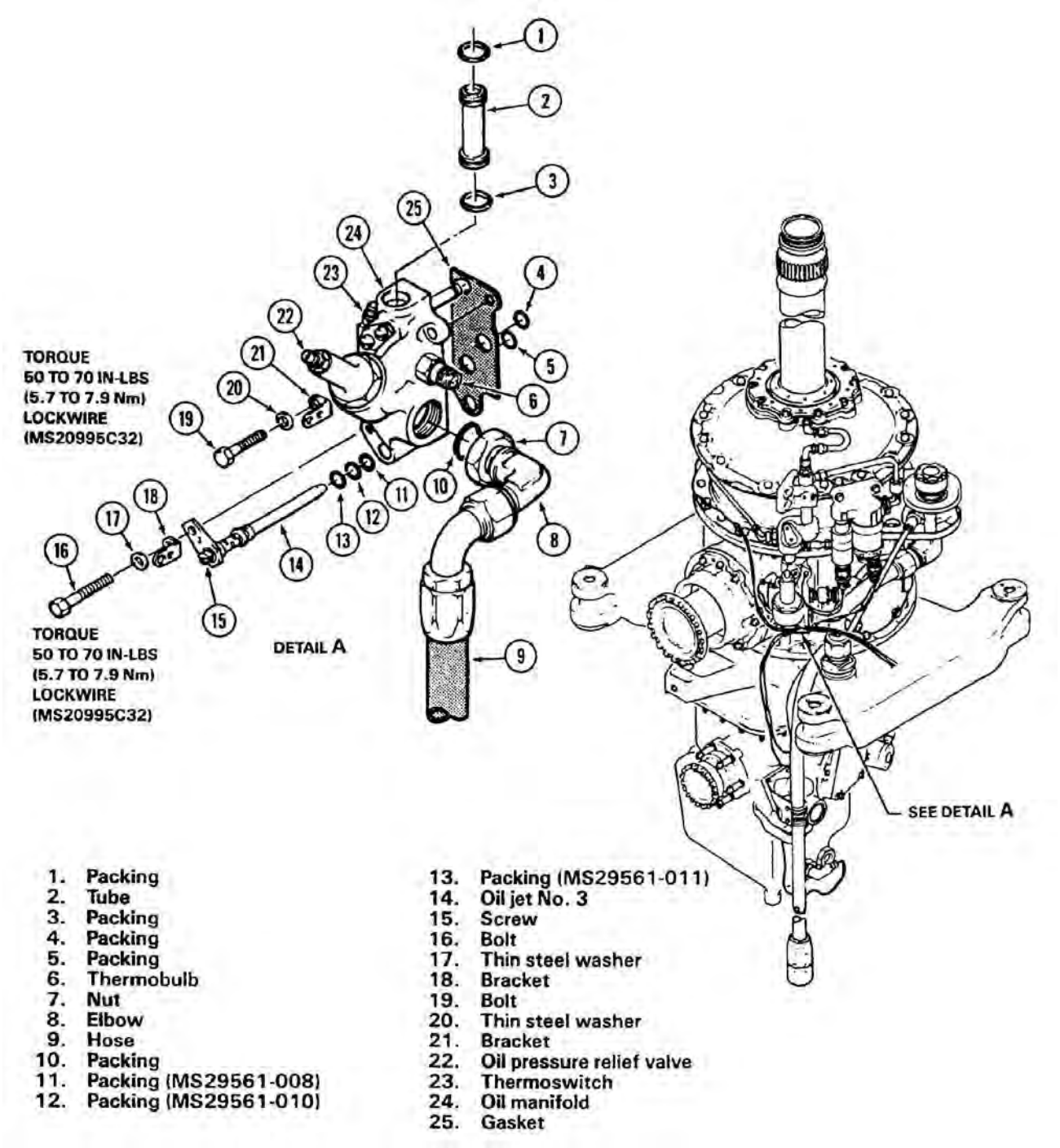

Figure 63-36. Oil Temperature Manifold

• COPYRIGHT © 2007 BY DART AEROSPACE LTD. •
THIS DOCUMENT IS PRIVATE AND CONFIDENTIAL AND IS SUPPLIED ON THE EXPRESS CONDITION THAT IT IS NOT TO BE USED FOR ANY PURPOSE OR COPIED OR COMMUNICATED TO ANY OTHER PERSON WITHOUT WRITTEN PERMISSION FROM DART AEROSPACE LTD.

63.5.20 Oil Pressure Transmitter

63.5.20.1 Removal

63.5.20.1.1 Disconnect electrical connector (5, Figure 63-37).

63.5.20.1.2 Remove pressure transmitter (4) with packing (3). Discard packing.

63.5.20.1.3 Cap or plug exposed cavity in manifold (2).

63.5.20.2 Inspection

Inspect transmitter (4, Figure 63-37) and electrical connector for bent pins, damaged threads, dents, or other mechanical damage rendering transmitter unserviceable.

63.5.20.3 Installation

MATERIALS REQUIRED

Refer to BHT-ALL-SPM for specification and source.

NUMBER	NOMENCLATURE
C-405	Lockwire

63.5.20.3.1 Lubricate packing (3, Figure 63-37) with transmission oil (Chapter 12).

63.5.20.3.2 Install packing (3) on transmitter (4).

63.5.20.3.3 Install transmitter (4) in manifold (2). Apply lockwire (C-405) to transmitter.

63.5.20.3.4 Install electrical connector (5).

63.5.20.3.5 Perform functional check of pressure transmitter (Chapter 96) and check for oil leaks at next helicopter ground run.

• COPYRIGHT © 2007 BY DART AEROSPACE LTD. •
THIS DOCUMENT IS PRIVATE AND CONFIDENTIAL AND IS SUPPLIED ON THE EXPRESS CONDITION THAT IT IS NOT TO BE USED FOR ANY PURPOSE OR COPIED OR COMMUNICATED TO ANY OTHER PERSON WITHOUT WRITTEN PERMISSION FROM DART AEROSPACE LTD.

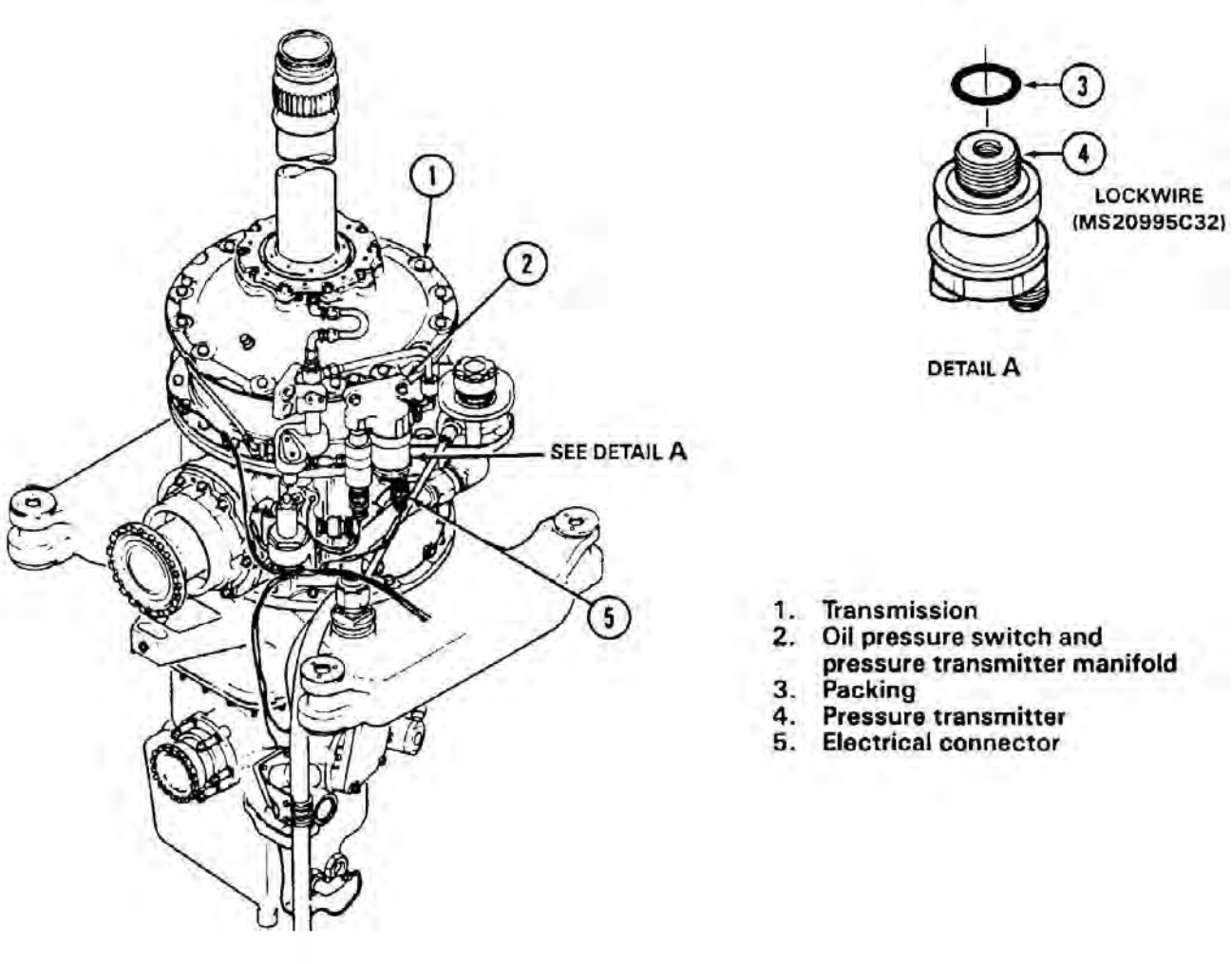

Figure 63-37. Transmission Oil Pressure Transmitter

• COPYRIGHT © 2007 BY DART AEROSPACE LTD. •
THIS DOCUMENT IS PRIVATE AND CONFIDENTIAL AND IS SUPPLIED ON THE EXPRESS CONDITION THAT IT IS NOT TO BE USED FOR ANY PURPOSE OR COPIED OR COMMUNICATED TO ANY OTHER PERSON WITHOUT WRITTEN PERMISSION FROM DART AEROSPACE LTD.

63.5.21 Oil Pressure Switch

63.5.21.1 Removal

63.5.21.1.1 Disconnect electrical connector (5, Figure 63-38).

63.5.21.1.2 Remove pressure switch (4) with packing (3). Discard packing.

63.5.21.1.3 Cap or plug cavity in manifold (2).

63.5.21.2 Inspection

Inspect switch (4, Figure 63-38) and electrical connector for bent pins, damaged threads, dents, or other mechanical damage which would render switch unserviceable.

63.5.21.3 Installation

MATERIALS REQUIRED

Refer to BHT-ALL-SPM for specification and source.

NUMBER	NOMENCLATURE
C-405	Lockwire

63.5.21.3.1 Lubricate packing (3, Figure 63-38) with transmission oil (Chapter 12).

63.5.21.3.2 Install packing (3) on switch (4).

63.5.21.3.3 Install switch (4) in manifold (2).

63.5.21.3.4 Install electrical connector (5). Secure connector with lockwire (C-405).

63.5.21.3.5 Perform functional check of pressure switch (Chapter 96) and check for oil leaks at next helicopter ground run.

• COPYRIGHT © 2007 BY DART AEROSPACE LTD. •
THIS DOCUMENT IS PRIVATE AND CONFIDENTIAL AND IS SUPPLIED ON THE EXPRESS CONDITION THAT IT IS NOT TO BE USED FOR ANY PURPOSE OR COPIED OR COMMUNICATED TO ANY OTHER PERSON WITHOUT WRITTEN PERMISSION FROM DART AEROSPACE LTD.

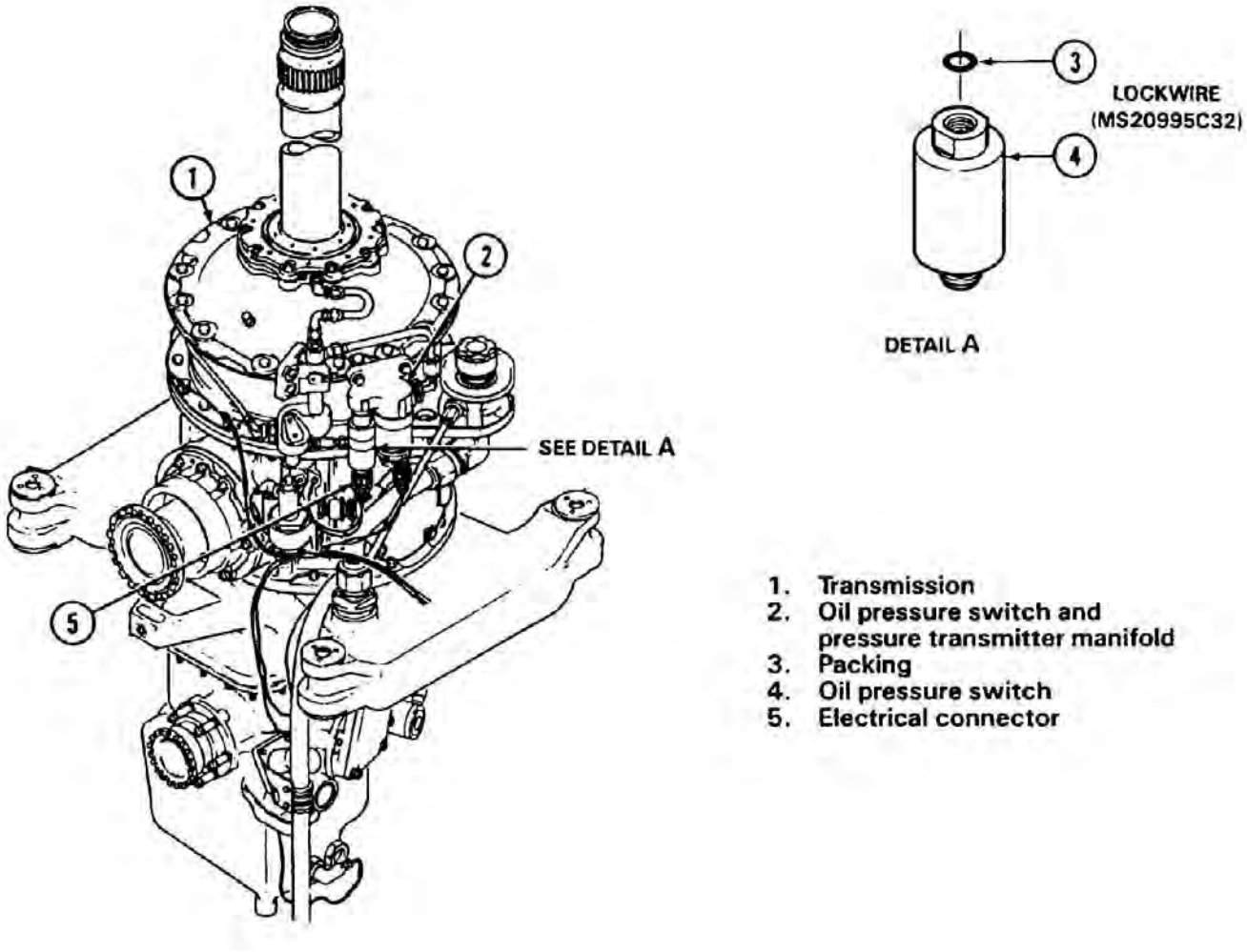

Figure 63-38. Transmission Oil Switch

• COPYRIGHT © 2007 BY DART AEROSPACE LTD. •
THIS DOCUMENT IS PRIVATE AND CONFIDENTIAL AND IS SUPPLIED ON THE EXPRESS CONDITION THAT IT IS NOT TO BE USED FOR ANY PURPOSE OR COPIED OR COMMUNICATED TO ANY OTHER PERSON WITHOUT WRITTEN PERMISSION FROM DART AEROSPACE LTD.

63.5.22 Oil Pressure Manifold

63.5.22.1 Removal

63.5.22.1.1 Remove oil pressure switch (paragraph 63.5.21.1).

63.5.22.1.2 Remove oil pressure transmitter (paragraph 63.5.20.1).

63.5.22.1.3 Remove tube (2, Figure 63-39).

63.5.22.1.4 Remove nuts (7) and remove manifold (4) with spacer (3).

63.5.22.2 Cleaning

MATERIALS REQUIRED

Refer to BHT-ALL-SPM for specification and source.

NUMBER	NOMENCLATURE
C-304	Solvent

63.5.22.2.1 Wipe manifold with clean cloth dampened with solvent (C-304).

63.5.22.1.2 Dry using filtered, compressed air.

63.5.22.3 Inspection

Inspect manifold (4, Figure 63-39) for damaged threads and for mechanical or corrosion damage. Damage in excess of superficial is unacceptable. Corrosion damage shall be removed.

63.5.22.4 Repair

Repair of manifold (4, Figure 63-39) is limited to removal of superficial corrosion from areas exposed on exterior of transmission.

63.5.22.5 Installation

63.5.22.5.1 Position spacer (3, Figure 63-39) and manifold (4) on transmission.

63.5.22.5.2 Install two aluminum washers (5) next to manifold then two steel washers (6). Install nuts (7).

63.5.22.5.3 Install tube assembly (2).

63.5.22.5.4 Install pressure transmitter (paragraph 63.5.20.3) and oil pressure switch (63.5.21.3).

63.5.22.5.5 Perform functional check of pressure switch and transmitter (Chapter 96) and check for oil leaks at next helicopter ground run.

• COPYRIGHT © 2007 BY DART AEROSPACE LTD. •
THIS DOCUMENT IS PRIVATE AND CONFIDENTIAL AND IS SUPPLIED ON THE EXPRESS CONDITION THAT IT IS NOT TO BE USED FOR ANY PURPOSE OR COPIED OR COMMUNICATED TO ANY OTHER PERSON WITHOUT WRITTEN PERMISSION FROM DART AEROSPACE LTD.

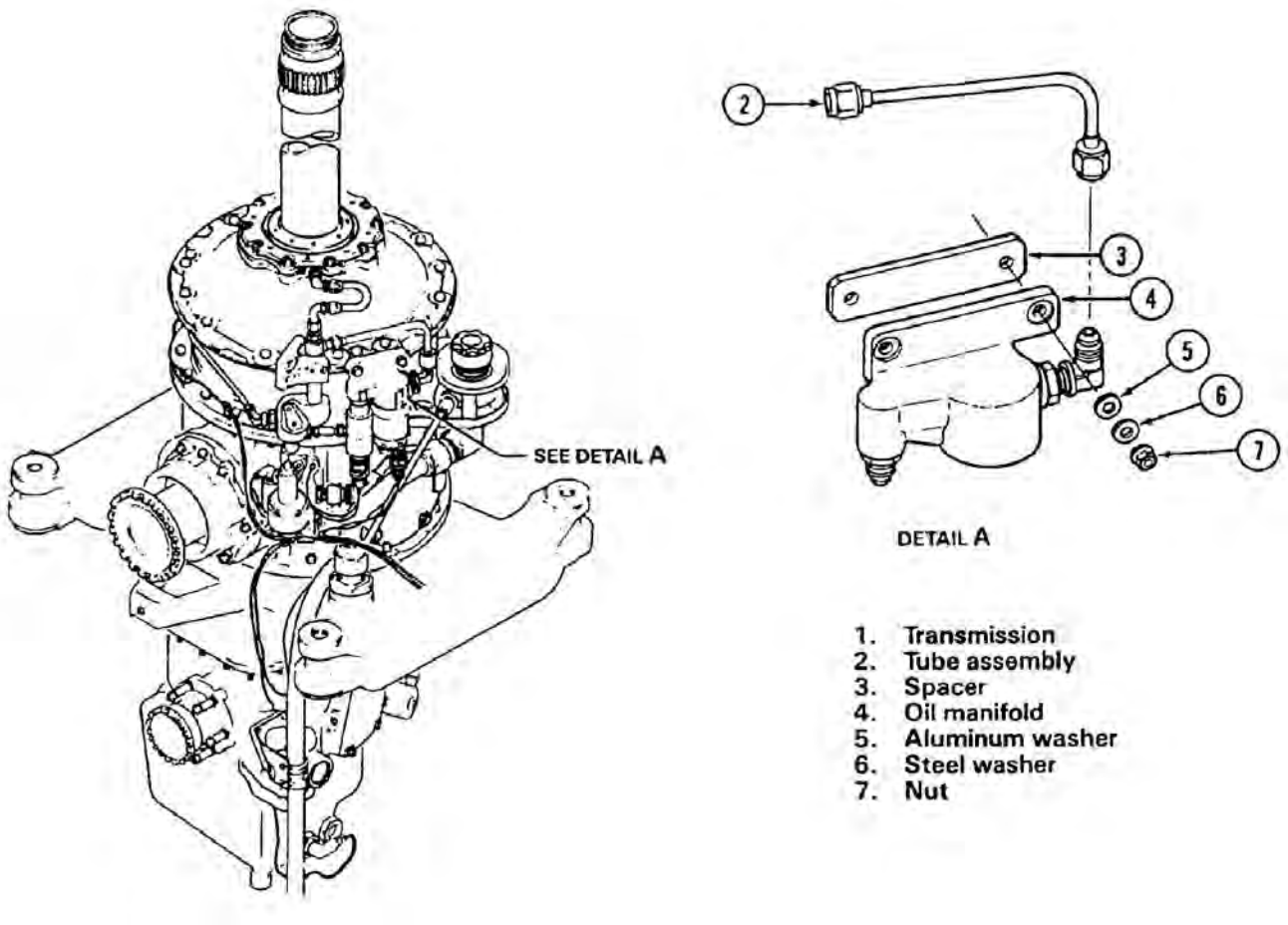

Figure 63-39. Oil Pressure Manifold

• COPYRIGHT © 2007 BY DART AEROSPACE LTD. •
THIS DOCUMENT IS PRIVATE AND CONFIDENTIAL AND IS SUPPLIED ON THE EXPRESS CONDITION THAT IT IS NOT TO BE USED FOR ANY PURPOSE OR COPIED OR COMMUNICATED TO ANY OTHER PERSON WITHOUT WRITTEN PERMISSION FROM DART AEROSPACE LTD.

63.5.23 Filler Neck, Scupper and Mounting Bracket

63.5.23.1 Removal

63.5.23.1.1 Disconnect hose (16, Figure 63-40).

63.5.23.1.2 Remove screw (17).

63.5.23.1.3 Disconnect tube (19).

63.5.23.1.4 Remove tube (13).

63.5.23.1.5 Loosen nut (10) and remove elbow (11) with packing (9). Discard packing.

63.5.23.1.6 Remove nuts (20). Remove scupper assembly (1) from bracket (5).

63.5.23.1.7 Remove bolts (2) and remove bracket (5).

63.5.23.2 Cleaning

MATERIALS REQUIRED

Refer to BHT-ALL-SPM for specification and source.

NUMBER	NOMENCLATURE
C-304	Solvent

63.5.23.2.1 Wipe all parts with clean cloth dampened with solvent (C-304).

63.5.23.2.2 Dry using filtered, compressed air.

63.5.23.3 Inspection

63.5.23.3.1 Inspect scupper (1, Figure 63-40) and oil filler cap for cracks and distortion or other damage rendering either component unserviceable. A loose fitting cap and/or cracked or distorted scupper is not acceptable. Unserviceable components shall be replaced. Superficial damage such as dents, nicks, or scratches not affecting serviceability are acceptable without repair. Light surface corrosion is acceptable provided it is removed and original surface finish restored.

63.5.23.3.2 Inspect bracket (5) and tube (13) for damage such as distortion and cracks. Loose fitting, cracked, and/or severely distorted parts are unacceptable and shall be replaced. Superficial dents, nicks, and scratches not affecting serviceability are acceptable without repair.

63.5.23.4 Installation

63.5.23.4.1 Install washers (22, Figure 63-40) on scupper assembly (1). Position scupper assembly (1) on bracket (5).

63.5.23.4.2 Install washers (21) and nuts (20). Torque nuts (21) 50 to 70 inch-lbs. (5.6 to 7.9 Nm).

63.5.23.4.3 Install elbow (11) on scupper assembly (1).

63.5.23.4.4 Lubricate packing (9) with transmission oil (Chapter 12). Install packing.

63.5.23.4.5 Tighten nut (10).

63.5.23.4.6 Position bracket assembly (5) on transmission and install bolts (2) with steel washers (3) under bolt heads and aluminum washers (4) next to bracket. Install aluminum washers (6) next to bracket with steel washer (7) next to nuts (8). Torque nuts (8) 230 to 250 inch-lbs. (25.9 to 28.2 Nm).

63.5.23.4.7 Install tube (13). Tighten nuts (12 and 14).

63.5.23.4.8 Connect tube nut (19) to fitting (23).

63.5.23.4.9 Install screw (17), washer, and nut.

63.5.23.4.10 Connect hose (16) to elbow (18).

NOTE

Extension cap (15) may be installed by inserting cap on transmission, pressing down on cap and

• COPYRIGHT © 2007 BY DART AEROSPACE LTD. •
THIS DOCUMENT IS PRIVATE AND CONFIDENTIAL AND IS SUPPLIED ON THE EXPRESS CONDITION THAT IT IS NOT TO BE USED FOR ANY PURPOSE OR COPIED OR COMMUNICATED TO ANY OTHER PERSON WITHOUT WRITTEN PERMISSION FROM DART AEROSPACE LTD.

twisting clockwise to engage lock.

63.5.23.4.11 Check for leaks at next helicopter ground run.

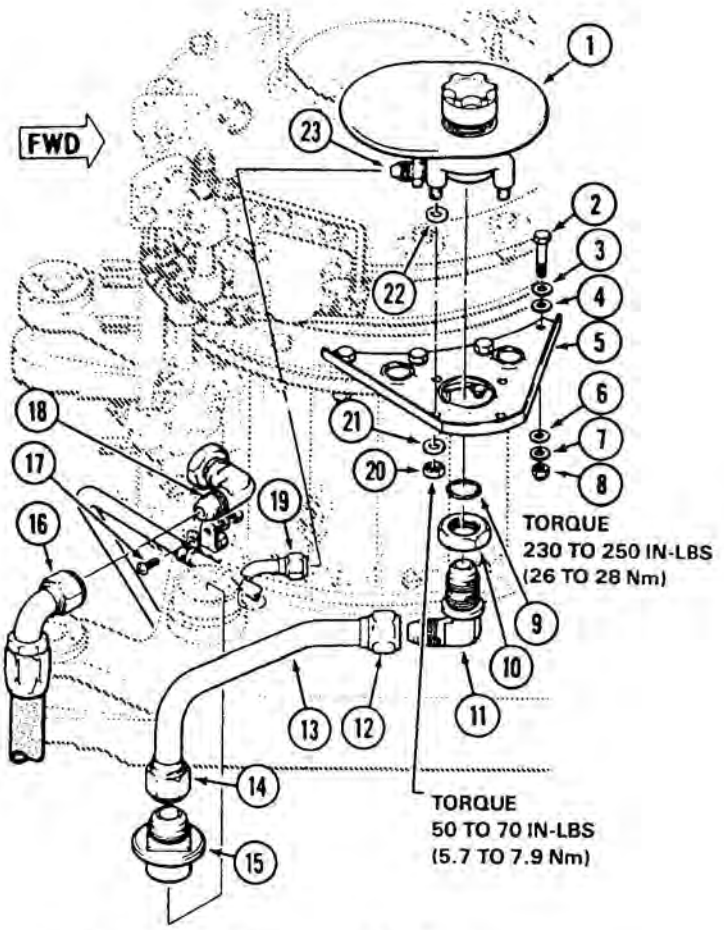

1. Scupper assembly
2. Bolt
3. Thin steel washer
4. Thin aluminum washer
5. Bracket
6. Thin aluminum washer
7. Thin steel washer
8. Nut
9. Packing
10. Nut
11. Elbow
12. Nut
13. Tube
14. Nut
15. Extension cap
16. Hose assembly
17. Screw
18. Elbow
19. Tube assembly
20. Nut
21. Aluminum washer
22. Aluminum washer
23. Fitting

Figure 63-40. Filler Neck, Scupper and Mounting Bracket

• COPYRIGHT © 2007 BY DART AEROSPACE LTD. •
THIS DOCUMENT IS PRIVATE AND CONFIDENTIAL AND IS SUPPLIED ON THE EXPRESS CONDITION THAT IT IS NOT TO BE USED FOR ANY PURPOSE OR COPIED OR COMMUNICATED TO ANY OTHER PERSON WITHOUT WRITTEN PERMISSION FROM DART AEROSPACE LTD.

63.5.24 Transmission Sight Glasses

NOTE
The following maintenance procedures are detailed for indicator (4, Figure 63-41). Maintenance procedures for indicator (6) are similar.

63.5.24.1 Removal

63.5.24.1.1 Drain transmission oil as necessary (Chapter 12) to a level below sight gage.

63.5.24.1.2 Remove retainer ring (1).

63.5.24.1.3 Carefully remove glass (3) with packing (2). Discard packing.

63.5.24.1.4 Remove indicator (4).

63.5.24.1.5 Cover opening in sump.

63.5.24.2 Cleaning

MATERIALS REQUIRED
Refer to BHT-ALL-SPM for specification and source.

NUMBER	NOMENCLATURE
C-304	Drycleaning Solvent

63.5.24.2.1 Wipe components with a clean cloth dampened with drycleaning solvent (C-304).

63.5.24.2.2 Dry with filtered, compressed air.

63.5.24.3 Inspection

63.5.24.3.1 Inspect glass (3, Figure 63-41) for cracks, crazing, and stains which would prevent an accurate determination of oil level. If any of these conditions are present, replace glass.

63.5.24.3.2 Inspect indicator (4) for stains that might present a false oil level reading. If such condition exists, replace indicator.

63.5.24.3.3 Inspect retainer ring (1) for distortion, cracks, tool marks, and insufficient tension. If any of these conditions exist, replace retainer.

63.5.24.4 Installation

63.5.24.4.1 Lubricate new packing (2, Figure 63-41) with transmission oil (Chapter 12).

63.5.24.4.2 Install indicator (4) in sump.

63.5.24.4.3 Install new packing (2) on sight glass (3) and insert glass in sump over indicator.

63.5.24.4.4 Install retainer ring (1).

63.5.24.4.5 Service transmission (Chapter 12).

63.5.24.4.6 Check for oil leaks at next helicopter ground run.

• COPYRIGHT © 2007 BY DART AEROSPACE LTD. •
THIS DOCUMENT IS PRIVATE AND CONFIDENTIAL AND IS SUPPLIED ON THE EXPRESS CONDITION THAT IT IS NOT TO BE USED FOR ANY PURPOSE OR COPIED OR COMMUNICATED TO ANY OTHER PERSON WITHOUT WRITTEN PERMISSION FROM DART AEROSPACE LTD.

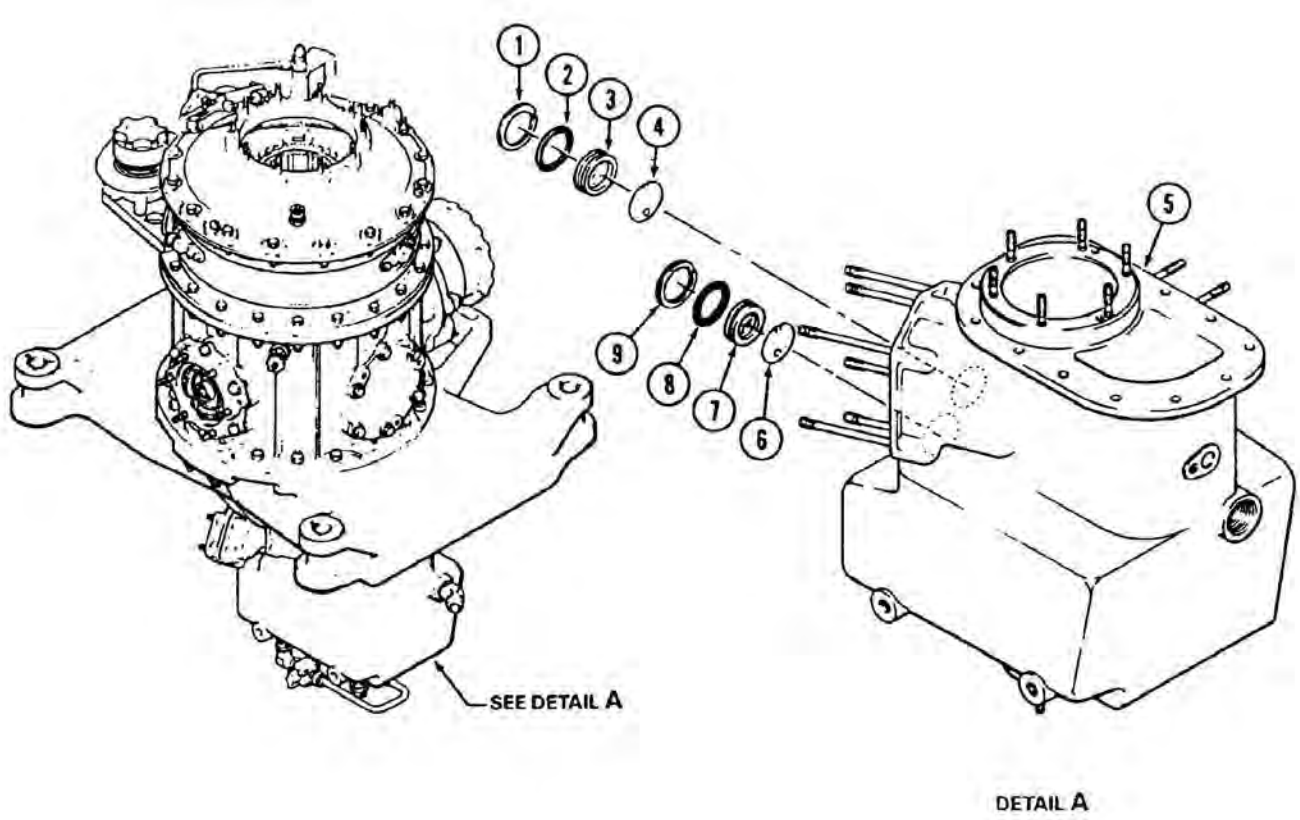

1. Retainer ring
2. Packing
3. Glass
4. Indicator (204-040-508-5)
5. Transmission sump case
6. Indicator (204-040-508-7)
7. Glass
8. Packing
9. Retainer ring

Figure 63-41. Transmission Sight Glass

• COPYRIGHT © 2007 BY DART AEROSPACE LTD. •
THIS DOCUMENT IS PRIVATE AND CONFIDENTIAL AND IS SUPPLIED ON THE EXPRESS CONDITION THAT IT IS NOT TO BE USED FOR ANY PURPOSE OR COPIED OR COMMUNICATED TO ANY OTHER PERSON WITHOUT WRITTEN PERMISSION FROM DART AEROSPACE LTD.

63.6 TRANSMISSION OIL COOLING SYSTEM

63.6.1 Transmission Oil Cooling System

The transmission oil system cooler is mounted in the bottom of the rear fuselage compartment, in the same opening as engine oil cooler and served by same turbo blower and air duct. The thermal bypass valve for the transmission cooler is an integral part of the cooler. Two drains with manual valves are provided in the lines between cooler and valve.

63.6.1.1 Removal – Transmission Oil Cooler

63.6.1.1.1 Disconnect transmission inlet and outlet oil hoses at quick-disconnect couplings if installed to reduce oil loss. (Refer to Figure 63-15.)

63.6.1.1.2 Drain transmission cooler lines by opening two drain valves (31, Figure 63-15) located behind aft landing gear crosstube at left side, using access openings in lower skin.

63.6.1.1.3 Open rear compartment door on right side of fuselage.

63.6.1.1.4 Remove turbo blower and air duct of engine oil cooler installation.

63.6.1.1.5 Disconnect oil lines from fittings of smaller cooler at left side. Cap lines and fittings.

63.6.1.1.6 Support both coolers in position. Remove four bolts and washers which secure lower flange of transmission oil cooler (33) to structural support. Remove bolts, nuts, and spacer washers at four corners of mating flanges of coolers.

63.6.1.1.7 Lift out transmission oil cooler (33).

NOTE

Be sure engine oil cooler is securely supported in place, if not also removed.

63.6.1.2 Inspection and Repair – Transmission Oil Cooler

63.6.1.2.1 Inspect oil cooler support for damage.

63.6.1.2.2 Inspect lines and fittings for stripped threads and serviceability.

63.6.1.2.3 Inspect oil cooler (33, Figure 63-13) for damage, clogging and malfunction.

63.6.1.2.4 Replace unserviceable lines, fittings, gaskets, or support, as required.

63.6.1.2.5 Replace oil cooler or thermal valve as assemblies for damage or malfunction. In the event of transmission internal failure, replace cooler and flush out all connecting lines and fittings thoroughly, using solvent (C-304). Dry with filtered compressed air.

63.6.1.3 Installation – Transmission Oil Cooler

63.6.1.3.1 Align transmission oil cooler (33, Figure 63-13), with outlet end forward, with engine oil cooler. At each corner of mating flanges, install bolt and nut with three aluminum alloy washers. Secure lower outboard flange of cooler to structural support with four bolts and washers.

63.6.1.3.2 Connect oil lines to fittings on cooler (33).

63.6.1.3.3 Reinstall air duct and turbo blower of engine oil cooler installation.

63.6.1.3.4 Reconnect transmission oil inlet and outlet hoses at quick-disconnect couplings if installed in compartment below pylon.

63.6.1.3.5 Service system with oil.

63.6.1.3.6 Check for leaks and proper operation of the system at ground runup.

• COPYRIGHT © 2007 BY DART AEROSPACE LTD. •
THIS DOCUMENT IS PRIVATE AND CONFIDENTIAL AND IS SUPPLIED ON THE EXPRESS CONDITION THAT IT IS NOT TO BE USED FOR ANY PURPOSE OR COPIED OR COMMUNICATED TO ANY OTHER PERSON WITHOUT WRITTEN PERMISSION FROM DART AEROSPACE LTD.

63.6.2 Oil Cooler Blower

Oil cooler blower is located in the aft fuselage, below the engine tailpipe. Cooling air flow is provided by a turbo blower that is bleed air driven.

63.6.2.1 Removal – Oil Cooler Blower

63.6.2.1.1 Open access door at right side of fuselage below engine tailpipe.

63.6.2.1.2 Remove blower screen.

63.6.2.1.3 Disconnect air hose from blower inlet fittings.

63.6.2.1.4 Remove three bolts, with nuts and washers, to detach blower from support bracket on fuselage bulkhead.

63.6.2.1.5 Remove eight bolts and washers to detach blower from duct. Remove blower assembly.

63.6.2.1.6 Remove eight bolts and washers which secure upper flanges of cooler and mount to sides of duct. Remove duct.

63.6.2.2 Installation – Oil Cooler Blower

63.6.2.2.1 Install reducer orifice, with packing in blower inlet.

CAUTION

MAKE SURE REDUCER ORIFICE IS INSTALLED IN BLOWER INLET TO PREVENT BLOWER OVERSPEED.

63.6.2.2.2 Check that support bracket is secured with three screws and washers on fuselage bulkhead above oil cooler location.

63.6.2.2.3 Position blower assembly, with inlet pointing forward at left side, to align mounting holes with duct flange and support bracket.

63.6.2.2.4 Attach blower to duct with eight bolts and thin aluminum alloy washers under each bolt head and nut.

63.6.2.2.5 Attach blower to support bracket with three bolts, using thin alloy washers under each bolt head and nuts.

63.6.2.2.6 Connect hose from bleed air valve line to blower inlet.

63.6.2.2.7 Install screen on blower flange with bolts, washers, grommets, and nuts.

63.6.3 Quick Threading Couplings

This type coupling is readily connected by twisting the socket in a clockwise direction onto the threaded nipple portion. The three equally spaced indicating pins on the socket half will assume an extended position when these coupling halves are properly connected and will assume a retracted position when coupling halves are separated. Their only function is to provide a see or feel means of determining whether or not the coupling is fully connected.

Disconnecting is accomplished by pulling back the knurled socket outer shell and turning counterclockwise. This type coupling employs spring loaded valves which open each other when coupling is connected, and immediately return to the closed position when disconnected. Do not employ gripping tools to connect or disconnect these types of couplings as these actions can be readily accomplished by hand.

63.6.3.1 Troubleshooting Quick Threading Couplings

NOTE

The following is to assist in determining cause of coupling leakage and to spot signs of impending failure.

63.6.3.1.1 If leakage occurs between the connected halves, the most probable cause is wear or damage to the seal that encircles the nipple and/or damage to the sealing portion of the nipple.

63.6.3.1.2 Leakage at the point where the

• COPYRIGHT © 2007 BY DART AEROSPACE LTD. •
THIS DOCUMENT IS PRIVATE AND CONFIDENTIAL AND IS SUPPLIED ON THE EXPRESS CONDITION THAT IT IS NOT TO BE USED FOR ANY PURPOSE OR COPIED OR COMMUNICATED TO ANY OTHER PERSON WITHOUT WRITTEN PERMISSION FROM DART AEROSPACE LTD.

end fitting engages the coupling body seldom occurs. In the event it does occur, the end fitting seal is the most probable cause.

63.6.3.1.3 Leakage that occurs at the coupling end fitting and hose or tube connection point may be attributed to such causes as follows:

63.6.3.1.3.1 Insufficient coupling nut torque.

63.6.3.1.3.2 Over-torque which may have damaged the sealing surfaces of component parts.

63.6.3.1.3.3 Dirt or other foreign material on the sealing surfaces, when leakage occurs at a flared end connection.

63.6.3.1.4 Leakage that occurs at the valve end of either the nipple or socket half when coupling is disconnected can be attributed to worn or damaged valve seal or to the metal-to-metal sealing surfaces if coupling does not employ a valve seal.

63.6.3.1.5 Signs of impending failure are:

63.6.3.1.5.1 Major thread damage on either coupling half end fitting.

63.6.3.1.5.2 Major damage to the quick lead acme threaded portion of either coupling half.

63.6.3.1.5.3 Damage to the spring loaded valve stems of either coupling half.

63.6.3.1.5.4 Loss of spring tension on the socket outer shell.

63.6.3.2 Inspection – Quick Threading Couplings

NOTE

Installation side load and vibration will impose wear upon the internal lock ring and flank of the acme thread of this type coupling, that can disrupt the flow characteristics and adversely affect system operation. As wear occurs in the coupling assembly, an internal spring forces the poppet guides apart, allowing movement of the poppet valves. As the wear progresses, movement of the poppets increase, reducing volume of the flow cavity or allowing fluid to push the valves downstream to restrict the flow by closing the poppet in the upstream coupling half.

63.6.3.2.1 Inspect installed quick threading couplings, for excessive wear, as follows:

63.6.3.2.1.1 With system pressure at zero and the coupling connected, compress the coupling lengthwise and measure from the back of the nipple half adapter hex to the back of the socket half adapter hex.

63.6.3.2.1.2 Record the measurement as value A.

63.6.3.2.1.3 Extend the coupling by pulling lengthwise and repeat the measurement.

63.6.3.2.1.4 Record this measurement as value B.

63.6.3.2.1.5 Compare values A and B to determine amount of length variation.

63.6.3.2.2 If length variation exceeds the given value in Table 63-2, for the particular dash size, early failure is indicated. Replace the coupling assembly.

• COPYRIGHT © 2007 BY DART AEROSPACE LTD. •
THIS DOCUMENT IS PRIVATE AND CONFIDENTIAL AND IS SUPPLIED ON THE EXPRESS CONDITION THAT IT IS NOT TO BE USED FOR ANY PURPOSE OR COPIED OR COMMUNICATED TO ANY OTHER PERSON WITHOUT WRITTEN PERMISSION FROM DART AEROSPACE LTD.

63.6.4 Transmission Oil System Tubes and Hoses

The transmission oil system has various tube and hose assemblies for transfer and return of oil from the transmission through cooler, valves, and fittings.

Table 63-2. Values for Inspection of Quick Threading Couplings

Coupling Dash Size	Maximum Allowable Length Variation
-4	0.050
-6	0.050
-8	0.050
-10	0.068
-12	0.068
-16	0.081
-20	0.099
-24	0.099

CAUTION

USE BACK-UP WRENCHES WHEN REMOVING AND INSTALLING OIL COOLER DRAIN FITTINGS, VALVES, TUBES, AND HOSES. ALL OPENINGS MUST BE CAPPED, TO PREVENT ENTRY OF ANY FOREIGN MATTER.

63.6.4.1 Inspection – Transmission Oil System Tubes and Hoses

63.6.4.1.1 Inspect tubes for nicks, scratches, dents, bent areas, and corrosion.

63.6.4.1.2 Inspect fittings for thread damage.

63.6.4.1.3 Inspect drain valves (31, Figure 63-15) for thread damage, nicks, scratches, corrosion, and malfunction.

63.6.4.1.4 Inspect hoses for fraying, deterioration, or evidence of leaking.

63.6.4.2 Repair/Replace – Transmission Oil system Tubes and Hoses

63.6.4.2.1 Replace drain valves (31, Figure 63-15) for thread damage and malfunction.

63.6.4.2.2 Replace hoses when frayed, deteriorated, or evidence of leaking exists.

63.6.4.2.3 Corrosion treat tubes, hoses, valves and fittings as required.

63.6.4.2.4 Repair nicks and scratches as required.

63.6.4.2.5 Replace tubes when dented or bent.

63.6.4.2.6 Replace fitting for thread damage or when excessive corrosion exists.

• COPYRIGHT © 2007 BY DART AEROSPACE LTD. •
THIS DOCUMENT IS PRIVATE AND CONFIDENTIAL AND IS SUPPLIED ON THE EXPRESS CONDITION THAT IT IS NOT TO BE USED FOR ANY PURPOSE OR COPIED OR COMMUNICATED TO ANY OTHER PERSON WITHOUT WRITTEN PERMISSION FROM DART AEROSPACE LTD.

CHAPTER 63 – MAIN ROTOR DRIVE SYSTEM (63-00-00)

63.7 TRANSMISSION QUILLS

63.7.1 Transmission Quills

63.7.2 Tail Rotor Drive Quill

A drive quill equipped with a flexible spherical toothed coupling located on aft side of transmission sump case. The tail rotor driveshaft is connected to the face splined coupling by a V-band clamp set.

63.7.2.1 Removal

SPECIAL TOOLS REQUIRED

NUMBER	NOMENCLATURE
T101338	Jackscrew set

63.7.2.1.1 Open engine cowling and remove induction baffle panels for access to transmission tail rotor drive quill.

63.7.2.1.2 Disconnect and remove forward section of tail rotor driveshaft (Chapter 65).

63.7.2.1.3 Remove nuts (1, Figure 63-42), washers (2, 4, and 5), and spacers (3) from six mounting studs around drive quill flange. Remove sealant from around quill sleeve and jackscrew holes (6).

63.7.2.1.4 Drain oil, as necessary, to a level below quill mounting port.

63.7.2.1.5 Use T101338 jackscrew set through three threaded holes (6) in mounting flange to pull drive quill from sump case. Turn jackscrew set evenly to keep quill aligned during removal to avoid damage. Cover open port.

63.7.2.1.6 Remove and discard packing (8) from drive quill sleeve.

63.7.2.2 Cleaning

MATERIALS REQUIRED

Refer to BHT-ALL-SPM for specification and source.

NUMBER	NOMENCLATURE
C-304	Solvent

CAUTION

DO NOT IMMERSE TAIL ROTOR DRIVE QUILL IN SOLVENT OR SPRAY SOLVENT ON QUILL. USE ONLY CLEAN CLOTHS DAMPENED WITH SOLVENT (C-304) TO EXTERIOR OF QUILL.

63.7.2.2.1 Clean sealant residue from both quill and transmission mounting port using a sharp plastic scraper.

63.7.2.2.2 Clean external surfaces of parts using solvent (C-304).

63.7.2.2.3 Dry with filtered, compressed air or clean, dry cloths.

63.7.2.3 Inspection

NOTE

The following inspection procedures shall be accomplished when tail rotor drive quill is removed for normal maintenance. If accompanying records indicate helicopter has been subjected to an overtorque, sudden stoppage, compressor stall, etc., refer to BHT-212-CR&O and accomplish the inspection outlined in paragraph 63.7.2.4.

63.7.2.3.1 Inspect coupling (10, Figure 63-42) for grease leakage. Wetting of adjacent areas by grease is cause for replacement of defective parts with the following exception: A small amount of grease expelled from around lip of seal (9) and/or other quill parts provided the following evaluation of grease leakage is accomplished.

CAUTION

DO NOT CLEAN OR SPRAY BEARING OR HANGER ASSEMBLY WITH ANY TYPE OF SOLVENT DURING INSPECTION. USE ONLY CLEAN, LINT-FREE CLOTH DAMPENED WITH SOLVENT (C-304) TO CLEAR EXTERIOR OF

• COPYRIGHT © 2007 BY DART AEROSPACE LTD. •
THIS DOCUMENT IS PRIVATE AND CONFIDENTIAL AND IS SUPPLIED ON THE EXPRESS CONDITION THAT IT IS NOT TO BE USED FOR ANY PURPOSE OR COPIED OR COMMUNICATED TO ANY OTHER PERSON WITHOUT WRITTEN PERMISSION FROM DART AEROSPACE LTD.

QUILL.

63.7.2.3.1.1 Wipe grease from coupling (10) and adjacent parts with clean cloths.

63.7.2.3.1.2 Inspect coupling (10) temperature indicators “TEMP-PLATES” for discoloration and overheat condition. A change in color white or light gray to black indicates a possible overheat condition and/or component degradation. Cause of discoloration shall be determined and corrected prior to continued operation. Refer to Chapter 65, Tail rotor driveshaft hanger assemblies.

63.7.2.3.1.3 Inspect coupling (10) for grease leakage and for discoloration due to overheating at frequent intervals during the next ten flight hours. If grease leakage and/or overheating occurs, replace quill.

63.7.2.3.2 Inspect seal (9) for protrusion and other evidence of damage. Protruding and/or damaged seals are not acceptable.

63.7.2.3.3 Inspect tail rotor drive quill in accordance with BHT-212-CR&O.

63.7.2.4 Inspection (Special/Condition)

NOTE

Accomplish the following inspection if helicopter records indicate quill has been subjected to an overtorque, sudden stoppage, compressor stall, etc. Refer, also, to BHT-212-CR&O for further requirements.

63.7.2.4.1 Remove tail rotor drive quill (paragraph 63.7.2.1).

63.7.2.4.2 Inspect teeth on quill gear and mating teeth on pinion inside transmission sump for scoring. Use a 10X magnifying glass. If scoring is detected, check scored area with 0.002 inch (0.05 mm) radius probe. If defect can be felt, affected part shall be replaced (BHT-212-CR&O).

63.7.2.4.3 If unacceptable defects are noted in the previous step on either the quill or transmission pinion, remove transmission. Tag transmission and quill as unserviceable and state reason for removal, i.e., overtorque, sudden stoppage, etc.

63.7.2.4.4 If no unacceptable defects are found, install tail rotor drive quill and return helicopter to service.

63.7.2.5 Repair

63.7.2.5.1 Repair mechanical and corrosion damage in accordance with BHT-212-CR&O.

63.7.2.5.2 Replace seal (9, Figure 63-42) in accordance with BHT-212-CR&O.

63.7.2.5.3 Lubricate coupling (10) in accordance with Chapter 65.

63.7.2.5.4 Inspect/replace temperature indicators ‘TEMP-PLATES” if required. Refer to Chapter 65. Tail rotor driveshaft hanger assemblies inspection.

63.7.2.6 Installation

MATERIALS REQUIRED

Refer to BHT-ALL-SPM for specification and source.

NUMBER	NOMENCLATURE
C-308	Adhesive

63.7.2.6.1 Install packing (8, Figure 63-42) in groove around drive quill sleeve (7).

63.7.2.6.2 Uncover mounting port on aft side of transmission sump assembly (11). Ensure mating surfaces of quill sleeve and case are clean.

63.7.2.6.3 Coat packing and mating surfaces of quill sleeve and mounting port with transmission oil.

CAUTION

IF IT IS NECESSARY TO TAP ON QUILL DURING INSTALLATION, USE ONLY A SOFT FACED MALLET AND TAP ONLY ON QUILL SLEEVE FLANGE.

• COPYRIGHT © 2007 BY DART AEROSPACE LTD. •
THIS DOCUMENT IS PRIVATE AND CONFIDENTIAL AND IS SUPPLIED ON THE EXPRESS CONDITION THAT IT IS NOT TO BE USED FOR ANY PURPOSE OR COPIED OR COMMUNICATED TO ANY OTHER PERSON WITHOUT WRITTEN PERMISSION FROM DART AEROSPACE LTD.

63.7.2.6.4 Apply heat lamp (or 250 watt light bulb) to mounting port in sump case until case is hot to the touch with bare hands. Insert drive quill into case, carefully meshing gears and guiding sleeve flange over mounting studs.

NOTE

NAS1197 washers shall be replaced with AN960JD washers.

63.7.2.6.5 Install an aluminum washer (5), a thin steel washer (4), a spacer (3), a thin steel washer (2), and a nut (1) on each of six mounting studs. Torque nuts 50 to 70 inch-lbs. (5.65 to 7.91 Nm).

63.7.2.6.6 Check quill (7) for freedom of rotation and for existence of gear backlash.

63.7.2.6.7 Apply a bead of adhesive (C-308) in gap around edge of quill sleeve where flange contacts case.

63.7.2.6.8 Install forward section of tail rotor driveshaft (Chapter 65).

63.7.2.6.9 Fill sump to proper level with oil (Chapter 12). Check for oil leaks at next run up.

63.7.2.6.10 Lubricate tail rotor driveshaft flex coupling. Refer to Chapter 65.

63.7.2.6.11 Check for oil leaks at next run up.

63.7.2.6.12 Install induction baffle panels. Close cowling.

• COPYRIGHT © 2007 BY DART AEROSPACE LTD. •
THIS DOCUMENT IS PRIVATE AND CONFIDENTIAL AND IS SUPPLIED ON THE EXPRESS CONDITION THAT IT IS NOT TO BE USED FOR ANY PURPOSE OR COPIED OR COMMUNICATED TO ANY OTHER PERSON WITHOUT WRITTEN PERMISSION FROM DART AEROSPACE LTD.

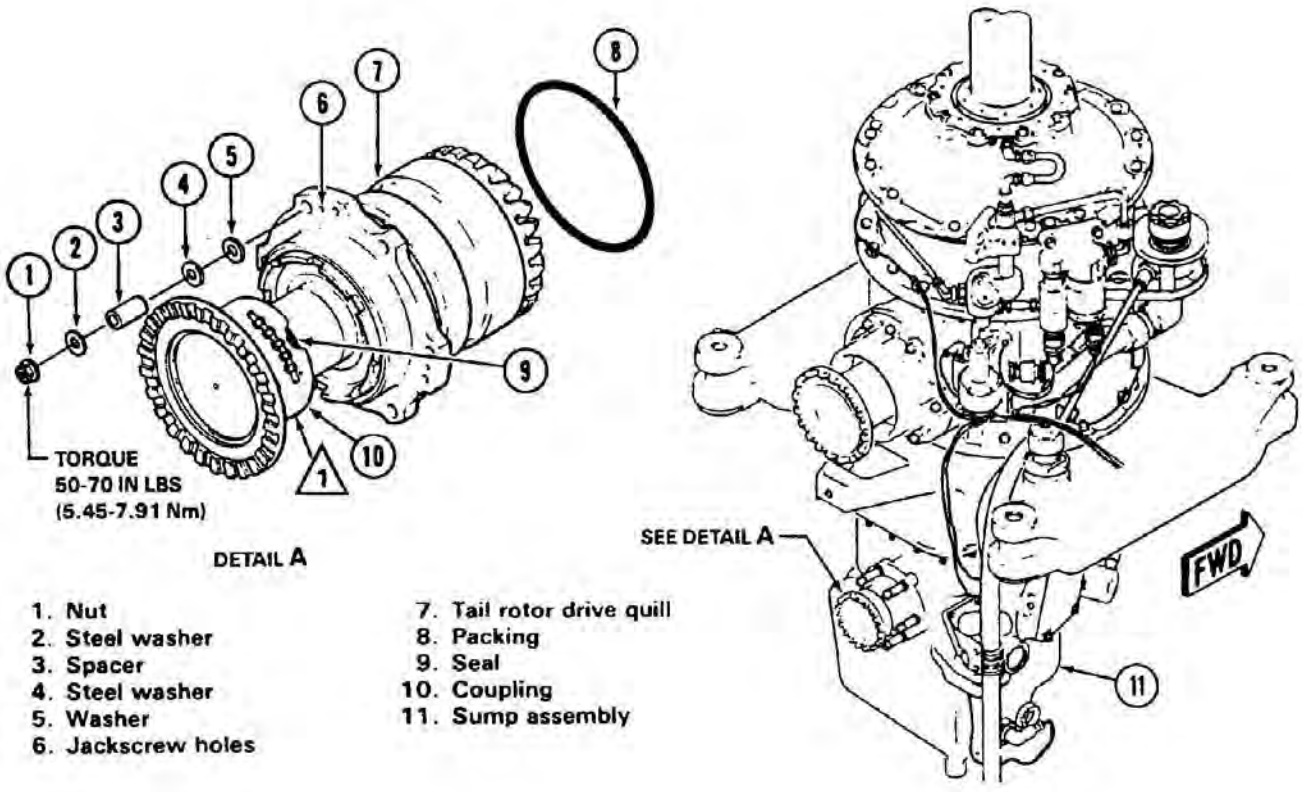

NOTE

1 Location of temperature indicator TEMP-PLATES. 6000-1 TEMP-PLATE (red border) 2 required -180 degrees apart. Refer to BHT-212-CR&O for installation procedures.

Figure 63-42. Tail Rotor Drive Quill

• COPYRIGHT © 2007 BY DART AEROSPACE LTD. •
THIS DOCUMENT IS PRIVATE AND CONFIDENTIAL AND IS SUPPLIED ON THE EXPRESS CONDITION THAT IT IS NOT TO BE USED FOR ANY PURPOSE OR COPIED OR COMMUNICATED TO ANY OTHER PERSON WITHOUT WRITTEN PERMISSION FROM DART AEROSPACE LTD.

63.7.3 Input Drive Quill

An input drive quill equipped with a freewheeling coupling is located on the aft side of the transmission main case. Engine torque is transmitted through the main driveshaft to this input quill, which drives the transmission gear train. The freewheeling clutch in the drive quill coupling operates automatically, engaging to allow the engine to drive the rotor or disengaging the stopped or idling engine during autorotational descent.

TOOLS REQUIRED

T101308	Jackscrews
T101488	Wrench Set
T101586	Pusher Set

63.7.3.1 Removal – Input Drive Quill

63.7.3.1.1 Open transmission fairing and remove main driveshaft.

63.7.3.1.2 Disconnect tube assembly (18, Figure 63-45) from union (17) at lower side of input quill.

63.7.3.1.3 Remove seven nuts from mounting studs around flange of input quill. Remove washers and clip (15).

63.7.3.1.4 Pull input drive quill from transmission case by using T101308 jackscrews, through three tapped holes in mounting flange. Turn the three jackscrews evenly to keep quill from cocking during removal.

63.7.3.1.5 Remove drain tube (10). Cover mounting port to prevent accidental entry of foreign objects into transmission.

63.7.3.2 Installation – Input Drive Quill

63.7.3.2.1 Uncover mounting port on aft side of transmission case. Check that mating surfaces of case and quill are clean. Inspect grooves provided for packings (7 and 9, Figure 63-45). Remove any burrs which might damage packings.

63.7.3.2.2 Remove cover from unused mounting port at left side of transmission.

63.7.3.2.3 Cut a rubber plug (1/4 to 1/2 inch thick) slightly larger than the diameter of the roller bearing inner race on the inboard end of the input pinion gear (8). Insert a cotter pin through center of rubber plug and through a washer. Bend ends of cotter pin back against washer and plug. Attach a piece of light chain, or 1/8 inch nylon cord, approximately two feet long, to the eye of the cotter pin. (Refer to Figure 63-43).

CAUTION

RUBBER PLUG INSTALLATION PROCEDURE IN STEP 63.7.3.2.4 MUST BE FOLLOWED TO PREVENT DAMAGE TO BEARING.

63.7.3.2.4 Position the rubber plug in the bearing, inside of the transmission, in such a manner that the rollers are held against the bearing outer race. Chain or cord will extend to outside of transmission main case through left side quill mounting port.

63.7.3.2.5 Install two new preformed packings (9, Figure 63-45) on drain tube (10). Lubricate packings with transmission oil (C-011) and install drain tube (10) in hole provided in transmission case.

63.7.3.2.6 Install two new preformed packings (7) on quill sleeve assembly (11) in outer grooves, leaving middle groove open for oil flow. Lubricate packings and mating surfaces of sleeve and case with transmission oil (C-011). Heat mounting port in transmission case with a heat lamp.

NOTE

Refer to BHT-205A1-CR&O for installation of special input quill mounting studs. These studs are required for use of T101586 pusher set.

63.7.3.2.7 Remove set screws from end of quill mounting studs at one, five and nine o'clock

• COPYRIGHT © 2007 BY DART AEROSPACE LTD. •
THIS DOCUMENT IS PRIVATE AND CONFIDENTIAL AND IS SUPPLIED ON THE EXPRESS CONDITION THAT IT IS NOT TO BE USED FOR ANY PURPOSE OR COPIED OR COMMUNICATED TO ANY OTHER PERSON WITHOUT WRITTEN PERMISSION FROM DART AEROSPACE LTD.

positions. Install the T101586-5 studs into quill mounting studs finger tight.

63.7.3.2.8 Install input quill onto the studs far enough to install the T101586-3 spacers, and the three nuts.

63.7.3.2.9 Tighten three nuts evenly to seat quill into case. Exercise care to engage gear teeth and to align nose of pinion into roller bearing as quill is installed. Ensure tube drain (10) is properly installed. Remove pusher set, when quill is properly seated.

63.7.3.2.10 Reinstall set screws in end of three mounting studs.

63.7.3.2.11 Install one aluminum washer on each mounting stud. Install clip (15) on mounting stud at five o'clock position and steel washers on other studs. Install nuts and torque 160 to 190 inch-pounds.

63.7.3.2.12 Remove rubber plug installed in step 63.7.3.2.4 and reinstall cover removed in step 63.7.3.2.2.

63.7.3.2.13 Install union (17) using new preformed packing (16) and connect tube assembly (18).

63.7.3.2.14 Install plug (13) with new preformed packing (12) and lockwire (C-405).

63.7.3.2.15 Apply a bead of sealant (C-308) around mating surfaces of quill and transmission case and fill jackscrew holes.

63.7.3.2.16 Reinstall main driveshaft and close transmission cowling.

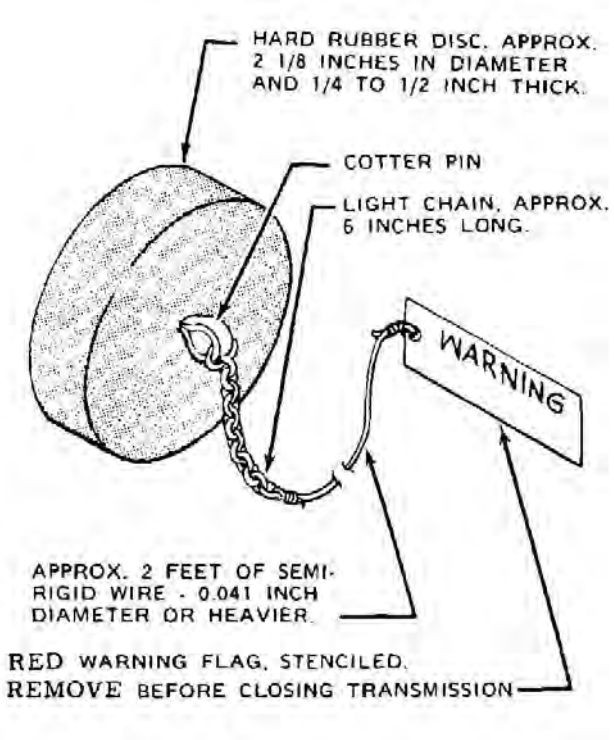

Figure 63-43. Input Drive Quill Work Aid

• COPYRIGHT © 2007 BY DART AEROSPACE LTD. •
THIS DOCUMENT IS PRIVATE AND CONFIDENTIAL AND IS SUPPLIED ON THE EXPRESS CONDITION THAT IT IS NOT TO BE USED FOR ANY PURPOSE OR COPIED OR COMMUNICATED TO ANY OTHER PERSON WITHOUT WRITTEN PERMISSION FROM DART AEROSPACE LTD.

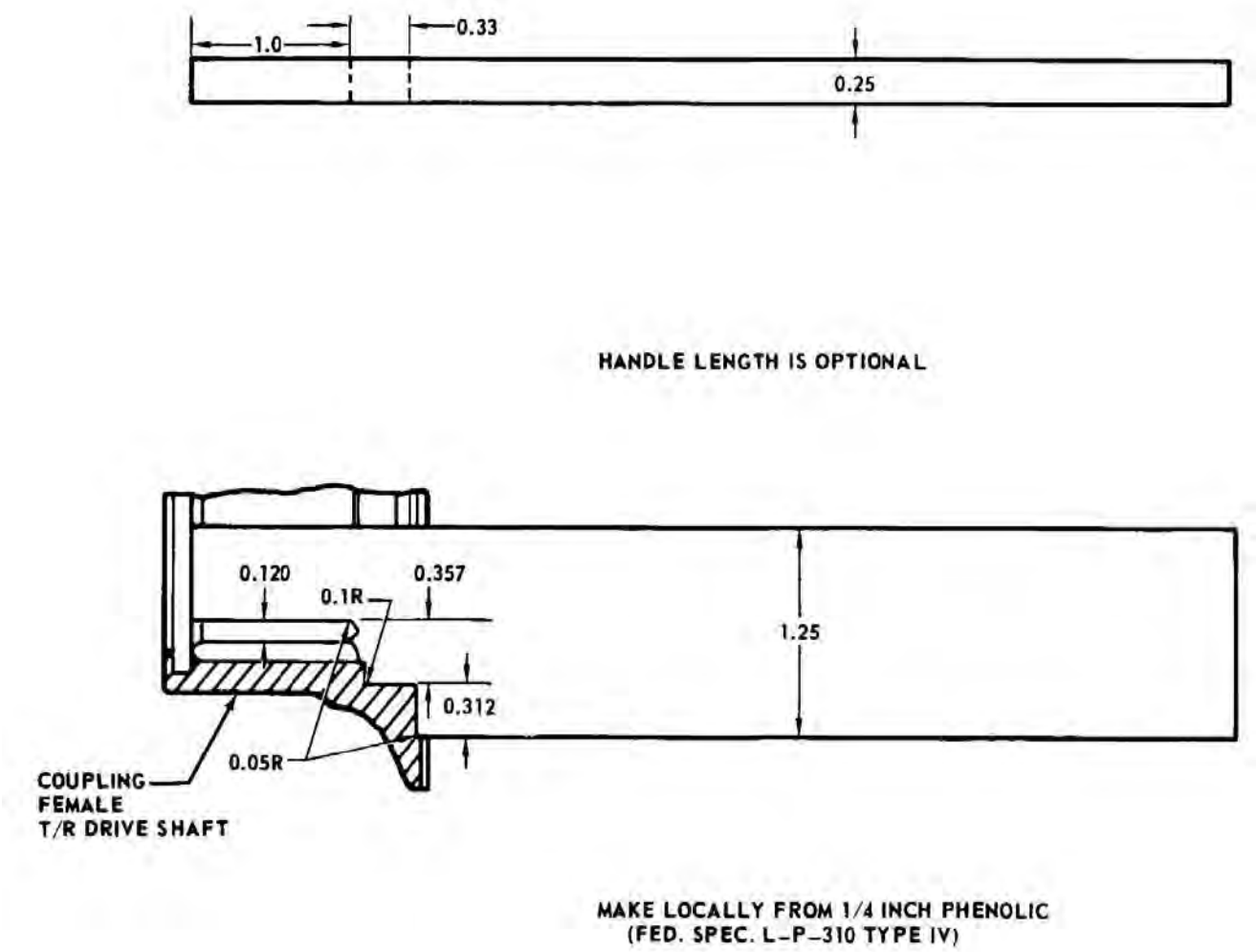

Figure 63-44. Work Aid for Lubrication of Tail Rotor Drive Coupling

• COPYRIGHT © 2007 BY DART AEROSPACE LTD. •
THIS DOCUMENT IS PRIVATE AND CONFIDENTIAL AND IS SUPPLIED ON THE EXPRESS CONDITION THAT IT IS NOT TO BE USED FOR ANY PURPOSE OR COPIED OR COMMUNICATED TO ANY OTHER PERSON WITHOUT WRITTEN PERMISSION FROM DART AEROSPACE LTD.

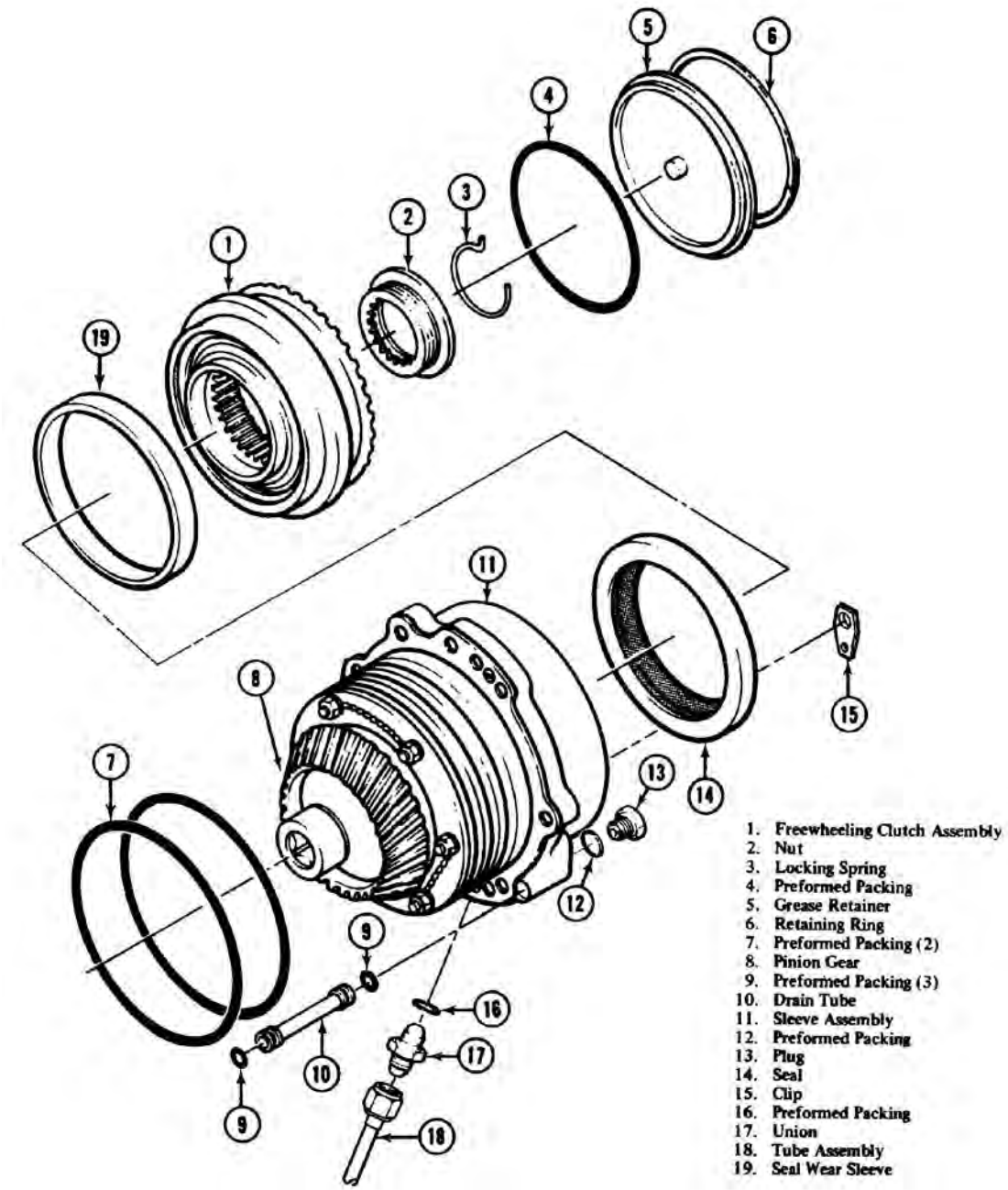

Figure 63-45. Input Drive Quill (205-040-263-003)

• COPYRIGHT © 2007 BY DART AEROSPACE LTD. •
THIS DOCUMENT IS PRIVATE AND CONFIDENTIAL AND IS SUPPLIED ON THE EXPRESS CONDITION THAT IT IS NOT TO BE USED FOR ANY PURPOSE OR COPIED OR COMMUNICATED TO ANY OTHER PERSON WITHOUT WRITTEN PERMISSION FROM DART AEROSPACE LTD.

63.7.4 Input Drive Quill Seal

TOOLS REQUIRED

T101488	Wrench Set

NOTE

Refer to paragraph 63.7.4.1 for seal replacement on 205-040-263-003 quill and paragraph 63.7.4.2 for 205-040-263-101 quill.

63.7.4.1 Replacement – Input Drive Quill (205-040-263-003) Seal

63.7.4.1.1 Remove cowling and main driveshaft, in accordance with paragraph 63.2.1.1.

63.7.4.1.2 Remove retaining ring (6, Figure 63-45) and grease retainer(S) with preformed packing (4) from freewheeling clutch assembly (1). Remove locking spring (3). Use T101488 wrench set and remove nut (2).

63.7.4.1.3 Remove freewheeling coupling assembly from splines of pinion and place on a suitable work bench.

CAUTION

DO NOT ALLOW COUPLING OUTER RACE TO MOVE AXIALLY RELATIVE TO COUPLING INNER RACE, AS THIS COULD PERMIT CLUTCH DRAG SPRINGS TO DROP OFF END OF CLUTCH INNER RACE AND PREVENT PROPER REASSEMBLY. TO PREVENT THIS, CAREFULLY REINSTALL GREASE RETAINER AND RING (WITHOUT PACKING) INTO COUPLING OUTER RACE TO HOLD PARTS IN PLACE DURING HANDLING.

63.7.4.1.4 Carefully remove seal wear sleeve (19) from coupling outer race by using a hand-held grinder to grind a groove almost through the old wear ring. Use caution to avoid grinding through wear ring and damage the race. Strike the wear ring with a hard rubber mallet to pop the wear ring off the race. Clean old adhesive from race with a plastic scraper and Scotchbrite (C-407).

63.7.4.1.5 Inspect new seal wear sleeve (19) and mating surface on coupling outer race for damage. Any nicks or dents on OD of wear sleeve are reasons for scrapping.

63.7.4.1.6 Installation of a new seal wear sleeve (19) is accomplished by masking off the outer surface of wear ring, cleaning and drying inner surface of wear ring and mating outer surface of outer coupling race. Scrub grease removing primer (C-345) into the surface thoroughly with Scotchbrite (C-407). This is a very important step.

NOTE

The primer (C-345) must be thoroughly stirred before use. Also, the solvent in the primer is trichloroethylene, and should be used with adequate ventilation.

63.7.4.1.7 Allow primer (C-345) to air dry to a white powder. Remove dry powder with a clean, dry cheesecloth. Apply only enough adhesive promoter (C-327), in a well ventilated area, with a brush to wet surface. Let promoter air dry a minimum of 30 minutes at 65 to 85°F (18 to 29°C) prior to applying adhesive (C-317).

NOTE

Adhesive (C-317) is a two-part component, 33 parts B to 100 parts A with a pot life of 40 minutes.

63.7.4.1.8 Assemble seal wear sleeve (19) to coupling outer race with the use of a press. Fabricate a suitable plate to bridge over the coupling inner race so that uniform pressure may be applied around entire circumference of wear sleeve while installing, to avoid cocking and distorting (Refer to Figure 63-46.) Install wear ring with large radius at outer edge of coupling race flush to 0.020 inch recess. Clean excess adhesive from wear sleeve thoroughly and remove all protective masking tape from seal bearing surface of wear sleeve.

CAUTION

• COPYRIGHT © 2007 BY DART AEROSPACE LTD. •
THIS DOCUMENT IS PRIVATE AND CONFIDENTIAL AND IS SUPPLIED ON THE EXPRESS CONDITION THAT IT IS NOT TO BE USED FOR ANY PURPOSE OR COPIED OR COMMUNICATED TO ANY OTHER PERSON WITHOUT WRITTEN PERMISSION FROM DART AEROSPACE LTD.

SPECIAL ATTENTION SHOULD BE GIVEN TO ASSURE NO EXCESSIVE BONDING MATERIAL IS LEFT BETWEEN THE WEAR SLEEVE AND COUPLING RACE, AS IT TENDS TO BECOME HARD AND FLAKE OFF. THIS FLAKING OF BONDED ADHESIVE HAS BEEN FOUND BETWEEN THE SEAL LIP AND WEAR SLEEVE CAUSING LEAKAGE.

63.7.4.1.9 Using a suitable three-leg gear puller, with legs turned out, and a plate across the outer end of the pinion, extract seal (14, Figure 63-45) out of the input quill housing. Remove all old adhesive from around seal area, using a plastic scraper, and clean with a dry, clean cheesecloth. Apply a film of sealing compound (C-328) to outside diameter of seal (14). Bridge over pinion shaft so that uniform pressure may be applied around the entire circumference of the seal while installing to avoid cocking and distorting. Make sure seal is bottomed against shoulder of input quill housing. Remove all excess sealant.

63.7.4.1.10 Spray OD of wear sleeve with dry film lubricant (C-019), if available, and install freewheeling assembly into input quill housing. Do not coat parts, other than wear sleeve (19) and seal (14) with dry film lubricant.

NOTE

If dry film lubricant (C-019) is not available, it is permissible to utilize approved transmission oil for this application.

63.7.4.1.11 Remove previously installed retaining ring (6, Figure 63-45), grease retainer (5) and install a new preformed packing (4) on grease retainer (5). Install nut (2) and using T101488 wrench set torque 350 to 400 foot-pounds. Install lock ring spring (3). Coat preformed packing (4) with transmission oil (C-011) and install grease retainer (5) and retaining ring (6)

63.7.4.1.12 Install main driveshaft and cowling. (Refer to paragraph 63.2.1.4).

63.7.4.2 Replacement – Input Drive Quill (205-040-263-101) Seal

63.7.4.2.1 Remove cowling and main driveshaft in accordance with paragraph 63.2.1.1.

63.7.4.2.2 Remove retaining ring (7, Figure 63-47) and grease retainer (6). Remove and discard packing (5).

63.7.4.2.3 Remove locking spring (4). Using T101488 wrench set remove nut (3). Remove freewheeling clutch assembly (2).

63.7.4.2.4 Remove screws (11), washers (10), nuts (14), and washers (13).

63.7.4.2.5 Remove cap (9) and seal (12) from main input quill (17). Keep shim in place. Press seal (12), from cap (9).

63.7.4.2.6 Remove all old sealing compound from cap (9).

63.7.4.2.7 Remove wear sleeve (1). (Refer to paragraph 63.7.4.1.)

63.7.4.2.8 Install new seal (12) in cap (9) using sealing compound (C-328). Ensure seal (12) is seated against shoulder of cap (9).

63.7.4.2.9 Install new packing (8) on sleeve of main input quill (17).

63.7.4.2.10 Ensure shim is in place. Install cap (9) and seal (12) on main input quill (17). Install washers (13), nuts (14). Install screws (11) and washers (10). Torque nuts (14) 160 to 190 inch-pounds.

63.7.4.2.11 Install freewheeling clutch assembly (2) on input pinion.

63.7.4.2.12 Install nut (3) using T101488 wrench set, torque 350 to 400 foot-pounds and install locking spring (4).

63.7.4.2.13 Install new packing (5) on grease retainer (6). Install grease retainer (6) in freewheeling clutch assembly and install retaining ring (7).

63.7.4.2.14 Install cowling and main driveshaft

• COPYRIGHT © 2007 BY DART AEROSPACE LTD. •
THIS DOCUMENT IS PRIVATE AND CONFIDENTIAL AND IS SUPPLIED ON THE EXPRESS CONDITION THAT IT IS NOT TO BE USED FOR ANY PURPOSE OR COPIED OR COMMUNICATED TO ANY OTHER PERSON WITHOUT WRITTEN PERMISSION FROM DART AEROSPACE LTD.

in accordance with paragraph 63.2.1.4.

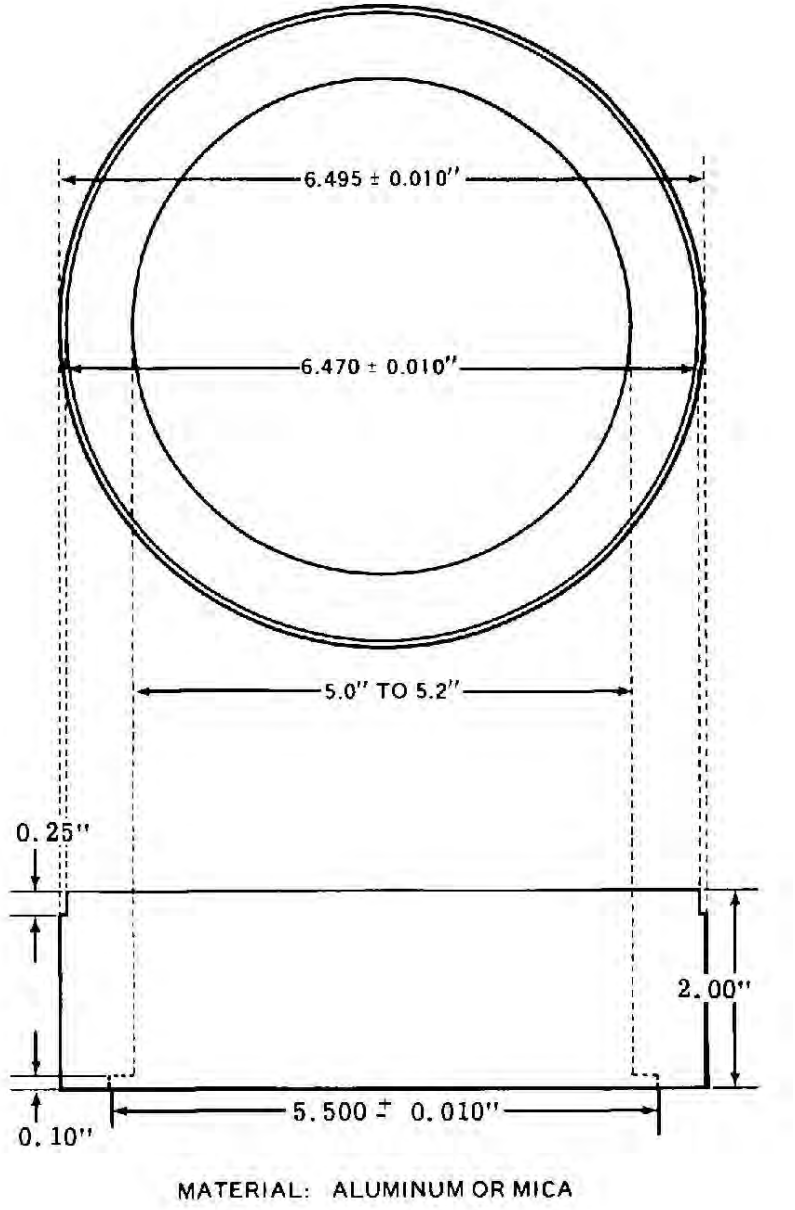

Figure 63-46. Input Quill Seal Wear Sleeve Work Aid

• COPYRIGHT © 2007 BY DART AEROSPACE LTD. •
THIS DOCUMENT IS PRIVATE AND CONFIDENTIAL AND IS SUPPLIED ON THE EXPRESS CONDITION THAT IT IS NOT TO BE USED FOR ANY PURPOSE OR COPIED OR COMMUNICATED TO ANY OTHER PERSON WITHOUT WRITTEN PERMISSION FROM DART AEROSPACE LTD.

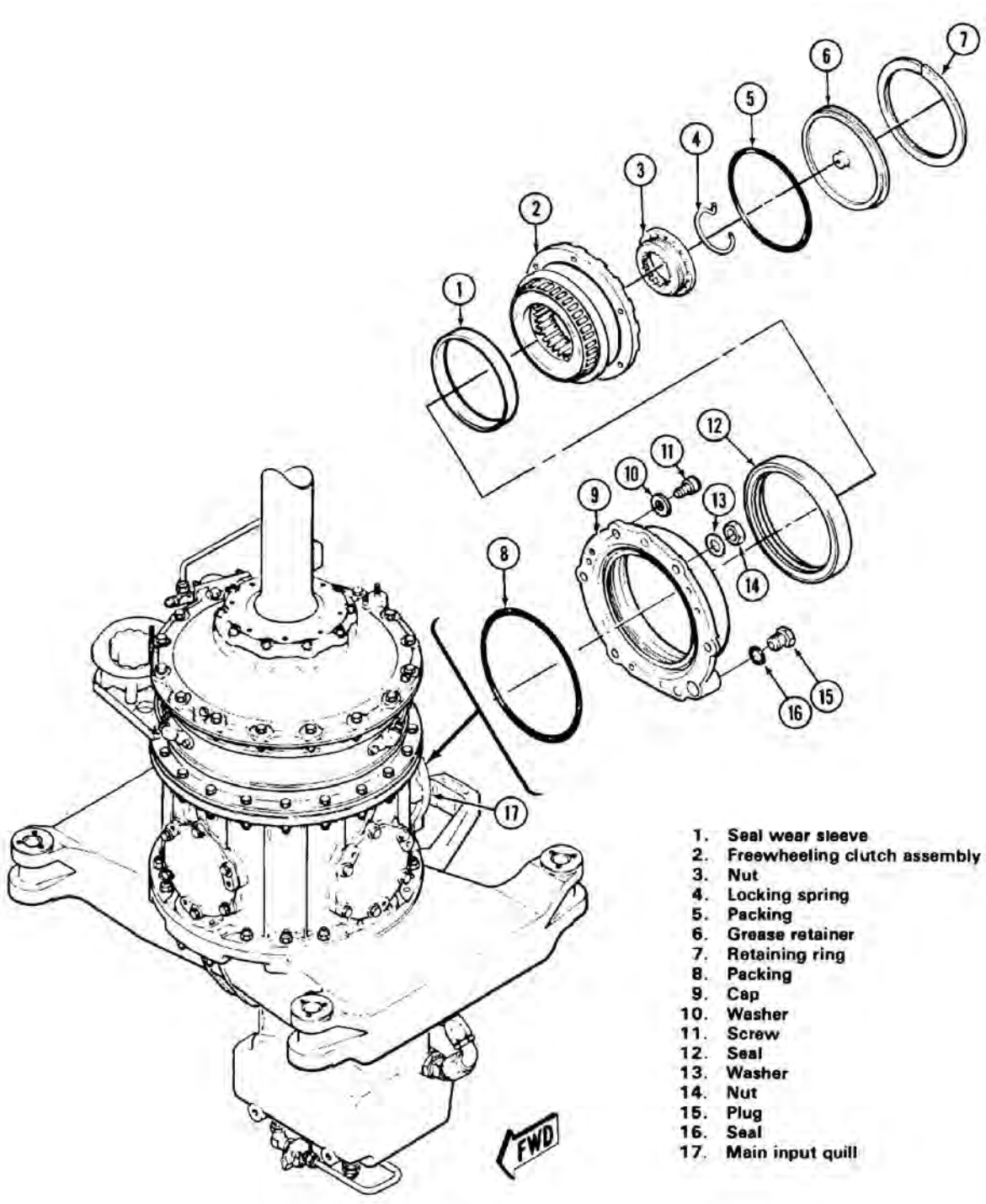

Figure 63-47. Input Drive Quill (205-040-263-101)

• COPYRIGHT © 2007 BY DART AEROSPACE LTD. •
THIS DOCUMENT IS PRIVATE AND CONFIDENTIAL AND IS SUPPLIED ON THE EXPRESS CONDITION THAT IT IS NOT TO BE USED FOR ANY PURPOSE OR COPIED OR COMMUNICATED TO ANY OTHER PERSON WITHOUT WRITTEN PERMISSION FROM DART AEROSPACE LTD.

63.7.5 Hydraulic Pump and Tachometer Drive Quill

A drive quill located on right side of transmission sump case drives No 1 hydraulic pump by splined connection to its gear shaft. A chain-and-sprocket offset drive in the quill drives the rotor tachometer generator.

63.7.5.1 Removal

SPECIAL TOOLS REQUIRED

NUMBER	NOMENCLATURE
T101308	Jackscrew set

63.7.5.1.1 Remove access doors on right side of pylon support in cabin.

63.7.5.1.2 Remove rotor tachometer generator, by disconnecting electrical plug and removing nuts (15, Figure 63-48) and washers (14) from four mounting studs.

63.7.5.1.3 Remove nuts (1) and washers (2) from four mounting studs. Remove no. 1 hydraulic pump (3) and gasket (4).

63.7.5.1.4 Remove nuts and washers from two remaining quill mounting studs (11, Figure 63-48).

63.7.5.1.5 Using a sharp, non-metallic scraper, remove sealant from around quill and from jackscrew holes.

CAUTION

TIGHTEN JACKSCREWS CAREFULLY AND EVENLY TO KEEP QUILL ALIGNED DURING REMOVAL.

63.7.5.1.6 Use T101308 jackscrew set to pull drive quill from transmission sump case. Cover open port.

63.7.5.1.7 Remove packing from quill sleeve. Discard packing.

63.7.5.2 Cleaning

MATERIALS REQUIRED

Refer to BHT-ALL-SPM for specification and source.

NUMBER	NOMENCLATURE
C-304	Solvent

63.7.5.2.1 Clean sealant residue from both quill and transmission mounting port using sharp plastic scraper.

63.7.5.2.2 Clean external surfaces of parts with a clean, lint-free cloth dampened with solvent (C-304).

63.7.5.2.3 Dry with filtered, compressed air.

63.7.5.3 Inspection

63.7.5.3.1 Visually inspect all accessible parts for damage.

63.7.5.3.2 Rotate quill gear and check bearings for smooth operation. Roughness which can be detected by feel is unacceptable.

63.7.5.3.3 Inspect gear teeth for nicks, cracks, and abnormal wear pattern. Any such damage which can be detected visually is unacceptable.

63.7.5.3.4 For additional inspection requirements, refer to BHT-212-CR&O.

63.5.7.4 Repair

MATERIALS REQUIRED

Refer to BHT-ALL-SPM for specification and source.

NUMBER	NOMENCLATURE
C-304	Solvent

63.7.5.4.1 Quill shall be replaced as an assembly when inspection requirements are not met.

• COPYRIGHT © 2007 BY DART AEROSPACE LTD. •
THIS DOCUMENT IS PRIVATE AND CONFIDENTIAL AND IS SUPPLIED ON THE EXPRESS CONDITION THAT IT IS NOT TO BE USED FOR ANY PURPOSE OR COPIED OR COMMUNICATED TO ANY OTHER PERSON WITHOUT WRITTEN PERMISSION FROM DART AEROSPACE LTD.

63.7.5.4.2 Replace seals (2 and 9, Figure 63-49) as follows:

63.7.5.4.2.1 Remove nuts (12), washers (11 and 10), bolt (5) with washers (6 and 8), and bracket (7).

NOTE

As sleeve (4) and cover (1) separate, tap splined end of gear shafts (not shown) where they protrude through seals (2 and 9) to prevent binding of shaft bearing in sleeve assembly.

63.7.5.4.2.2 Using jackscrews, T101308, carefully and evenly remove cover (1) from housing sleeve assembly (4).

63.7.5.4.2.3 Remove and discard gaskets (3 and 13).

63.7.5.4.2.4 Press seals (2 and 9) from cover (1).

63.7.5.4.2.5 Clean seal housing in cover with solvent (C-304) and dry using filtered, compressed air.

63.7.5.4.2.6 Position new gasket (3) on sleeve assembly (4) studs and position new gasket (13) in sleeve assembly.

63.7.5.4.2.7 Install cover assembly (1) on sleeve assembly.

NOTE

Bracket (7) replaces washer (6) at 12 o'clock position only.

63.7.5.4.2.8 Install bolt (5) with aluminum washers (8) next to quill housing and steel washers (6) or bracket (7) next to bolt head.

63.7.5.4.2.9 Install nuts (12) with aluminum washers (10) next to cover (1) and steel washers next to nut.

63.7.5.5 Installation

MATERIALS REQUIRED

Refer to BHT-ALL-SPM for specification and source.

NUMBER	NOMENCLATURE
C-007	Bearing Grease
C-308	Adhesive

63.7.5.5.1 Lubricate new packing (9, Figure 63-48) with transmission oil (Chapter 12) and install in groove on drive quill sleeve (Figure 63-45).

63.7.5.5.2 Uncover mounting port on right side of transmission sump case. Ensure mating surfaces of drive quill and mounting port are clean and undamaged. Coat packing and mating surface of quill sleeve and mounting port with transmission oil. Heat mounting port with a heat lamp (or 250 watt light bulb) until port area is hot to the touch with bare hands to aid quill installation.

63.7.5.5.3 Position drive quill with tachometer generator mounting pad forward. Insert quill into sump case, meshing gears carefully and guiding sleeve flange over mounting studs.

NOTE

Install AN960JD616 aluminum washers next to quill sleeve. Do not substitute any other type washer (including NAS1197).

63.7.5.5.4 Install nuts (5) and washers (6 and 7) on two studs above and below pump mounting pad, using aluminum alloy washers (7) next to quill and thin steel washers (6) next to nut (5). Torque nuts 100 to 140 inch-lbs. (11.30 to 15.82 Nm).

63.7.5.5.5 Check quill for freedom of rotation and for existence of gear backlash.

63.7.5.5.6 Apply adhesive (C-308) around mating surfaces and jackscrew holes.

63.7.5.5.7 Install no. 1 hydraulic pump (Chapter 29).

63.7.5.5.8 Lubricate shaft of rotor tachometer generator with bearing grease (C-007), and install

• COPYRIGHT © 2007 BY DART AEROSPACE LTD. •
THIS DOCUMENT IS PRIVATE AND CONFIDENTIAL AND IS SUPPLIED ON THE EXPRESS CONDITION THAT IT IS NOT TO BE USED FOR ANY PURPOSE OR COPIED OR COMMUNICATED TO ANY OTHER PERSON WITHOUT WRITTEN PERMISSION FROM DART AEROSPACE LTD.

on forward drive pad with four nuts and washers. Torque nuts 50 to 70 inch-lbs. (5.65 to 7.91 Nm). Connect electrical cable plug.

63.7.5.5.9 Install access doors on right side of pylon support.

63.7.5.5.10 Perform operational and leak check.

• COPYRIGHT © 2007 BY DART AEROSPACE LTD. •
THIS DOCUMENT IS PRIVATE AND CONFIDENTIAL AND IS SUPPLIED ON THE EXPRESS CONDITION THAT IT IS NOT TO BE USED FOR ANY PURPOSE OR COPIED OR COMMUNICATED TO ANY OTHER PERSON WITHOUT WRITTEN PERMISSION FROM DART AEROSPACE LTD.

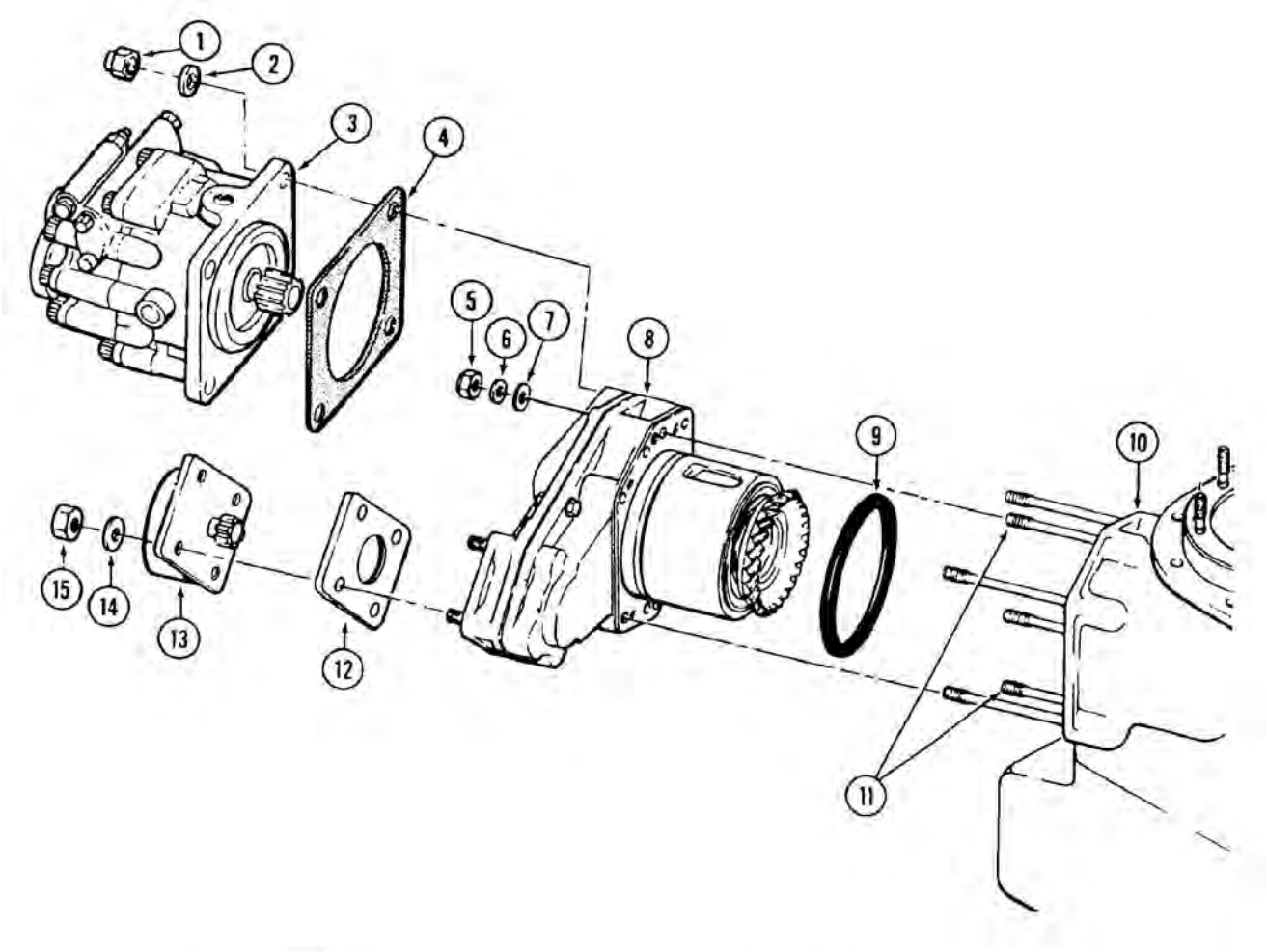

Figure 63-48. No. 1 Hydraulic Pump and Rotor Tachometer Drive Quill

• COPYRIGHT © 2007 BY DART AEROSPACE LTD. •
THIS DOCUMENT IS PRIVATE AND CONFIDENTIAL AND IS SUPPLIED ON THE EXPRESS CONDITION THAT IT IS NOT TO BE USED FOR ANY PURPOSE OR COPIED OR COMMUNICATED TO ANY OTHER PERSON WITHOUT WRITTEN PERMISSION FROM DART AEROSPACE LTD.

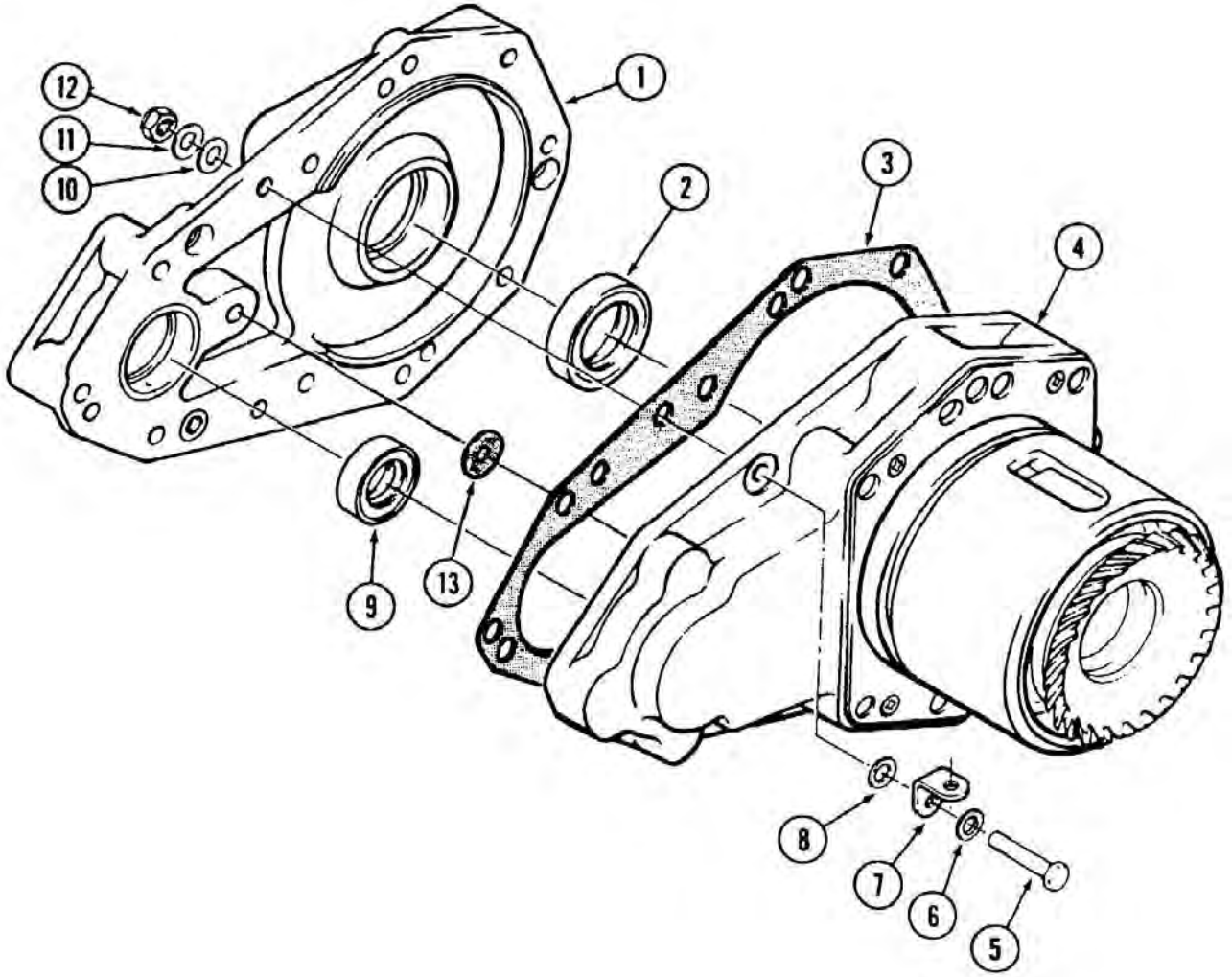

1. Cover
2. Seal
3. Gasket
4. Sleeve assembly
5. Bolt
6. Steel washer
7. Bracket
8. Aluminum washer
9. Seal
10. Aluminum washer
11. Steel washer
12. Nut
13. Gasket

Figure 63-49. No. 1 Hydraulic System and Rotor Tachometer Drive Quill Assembly

• COPYRIGHT © 2007 BY DART AEROSPACE LTD. •
THIS DOCUMENT IS PRIVATE AND CONFIDENTIAL AND IS SUPPLIED ON THE EXPRESS CONDITION THAT IT IS NOT TO BE USED FOR ANY PURPOSE OR COPIED OR COMMUNICATED TO ANY OTHER PERSON WITHOUT WRITTEN PERMISSION FROM DART AEROSPACE LTD.

63.7.6 No. 2 Hydraulic Pump Drive Quill

A drive quill located on the front of the transmission main case drives the no. 2 hydraulic pump by splined connection to its gear shaft.

63.7.6.1 Removal

SPECIAL TOOLS REQUIRED

NUMBER	NOMENCLATURE
T100338	Jackscrew set

63.7.6.1.1 Open transmission forward cowling.

63.7.6.1.2 Remove no. 2 hydraulic pump (Chapter 29).

63.7.6.1.3 Using a sharp non-metallic scraper, cut sealant around edge of quill. Clean sealant from jackscrew holes.

63.7.6.1.4 Remove six bolts and washers around drive quill mounting flange (Figure 63-50).

63.7.6.1.5 Install T101338 jackscrew set and tighten evenly to pull quill from transmission case.

63.7.6.1.6 Remove packing from quill sleeve. Discard packing.

63.7.6.2 Cleaning

MATERIALS REQUIRED

Refer to BHT-ALL-SPM for specification and source.

NUMBER	NOMENCLATURE
C-309	Methyl-Ethyl-Ketone (MEK)

63.7.6.2.1 Clean remaining sealant from quill and transmission. Use caution to prevent sealant from entering transmission or internal parts of quill. Use sharp, non-metallic scraper, MEK (C-309), and clean, lint-free cloths to remove old sealant.

63.7.6.2.2 Dry with filtered, compressed air.

63.7.6.3 Inspection

63.7.6.3.1 Inspect quill for damage, corrosion and excessive wear.

63.7.6.3.2 Rotate pinion in sleeve and check for rough bearing.

CAUTION

REPLACE HYDRAULIC PUMP DRIVE QUILL AS A COMPLETE ASSEMBLY IF QUILL DOES NOT MEET INSPECTION REQUIREMENTS, IF THERE IS AN ABNORMAL GEAR PATTERN, AND/OR IF THERE IS EVIDENCE OF BEARING FAILURE.

63.7.6.4 Repair

For repair and overhaul instructions, refer to BHT-212-CR&O.

63.7.6.5 Installation

MATERIALS REQUIRED

Refer to BHT-ALL-SPM for specification and source.

NUMBER	NOMENCLATURE
C-308	Sealant

63.7.6.5.1 Ensure mating surfaces of quill sleeve and case are clean and undamaged.

63.7.6.5.2 Install new packing on quill (Figure 63-50). Lubricate packing and mating surfaces of quill and case with transmission oil (Chapter 12).

63.7.6.5.3 Apply heat lamp (or 250 watt light bulb) to mounting port in transmission main case. Heat case until it is hot to the touch with bare hands.

63.7.6.5.4 Insert quill into transmission with oil hole in quill sleeve straight up. Exercise caution to prevent damage to pinion and gear

• COPYRIGHT © 2007 BY DART AEROSPACE LTD. •
THIS DOCUMENT IS PRIVATE AND CONFIDENTIAL AND IS SUPPLIED ON THE EXPRESS CONDITION THAT IT IS NOT TO BE USED FOR ANY PURPOSE OR COPIED OR COMMUNICATED TO ANY OTHER PERSON WITHOUT WRITTEN PERMISSION FROM DART AEROSPACE LTD.

teeth. If necessary, tap on quill using a soft face mallet as an aid to installation. Tap only on quill sleeve. It may be necessary to rotate pinion slightly to permit gear meshing.

NOTE

Install AN960JD616 aluminum washers (7, Figure 63-48) next to quill sleeve. Do not substitute any other type of washer (including NAS1197).

63.7.6.5.5 Align quill sleeve bolt holes and install six bolts, with steel washers next to heads and aluminum alloy washers next to quill flange. Torque bolts 160 to 190 inch-lbs. (18.08 to 21.47 Nm).

63.7.6.5.6 Check quill pinion by hand for freedom of rotation and existence of backlash.

63.7.6.5.7 Apply a small bead of adhesive (C-308) in gap around edge of quill where quill contacts transmission case and jackscrew holes.

63.7.6.5.8 Install no. 2 hydraulic pump (Chapter 29).

63.7.6.5.9 Close transmission cowling.

63.7.6.5.10 Perform operational check and check for leaks.

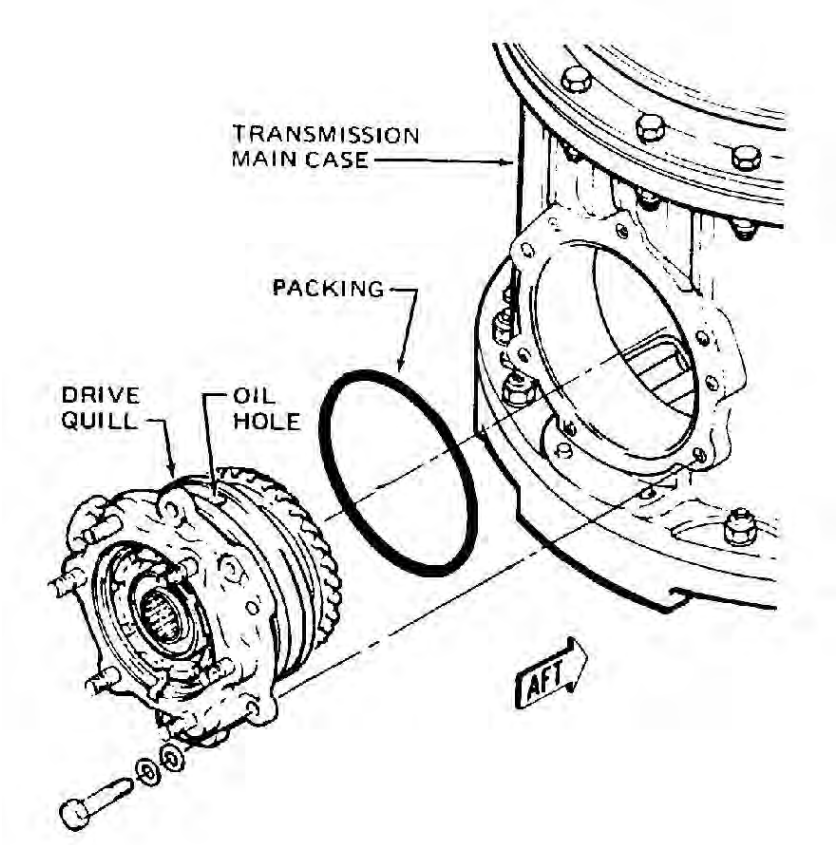

Figure 63-50. No. 2 Hydraulic Pump Drive Quill

• COPYRIGHT © 2007 BY DART AEROSPACE LTD. •
THIS DOCUMENT IS PRIVATE AND CONFIDENTIAL AND IS SUPPLIED ON THE EXPRESS CONDITION THAT IT IS NOT TO BE USED FOR ANY PURPOSE OR COPIED OR COMMUNICATED TO ANY OTHER PERSON WITHOUT WRITTEN PERMISSION FROM DART AEROSPACE LTD.

63.7.7 Rotor Brake Quill

For helicopters so equipped, the rotor brake quill is installed on left side of transmission main case (Figure 63-51).

63.7.7.1 Removal

SPECIAL TOOLS REQUIRED

NUMBER	NOMENCLATURE
T101308	Jackscrew set

63.7.7.1.1 Open left side engine and transmission cowling to gain access to transmission.

63.7.7.1.2 Remove outboard brake assembly half (paragraph 63.7.8.1).

63.7.7.1.3 If required, remove brake disc.

63.7.7.1.4 Using a sharp, plastic scraper, cut sealant from between quill mounting flange and transmission case. Clean sealant from jackscrews holes.

63.7.7.1.5 Remove bolts (5, Figure 63-51), steel washers (4), and aluminum washers (3).

63.7.7.1.6 Use a heat lamp or 250 watt light bulb to heat sump mounting port until it is hot to the touch.

63.7.7.1.7 Install jackscrews, T101308, and tighten carefully and evenly to remove quill (2) with packing (1) from transmission. Discard packing.

63.7.7.1.6 Cover mounting port in transmission to prevent entry of foreign material.

63.7.7.2 Cleaning

MATERIALS REQUIRED

Refer to BHT-ALL-SPM for specification and source.

NUMBER	NOMENCLATURE
C-304	Drycleaning Solvent

63.7.7.2.1 Clean sealant residue from both quill and mating surface of transmission using a sharp, plastic scraper and drycleaning solvent (C-304).

63.7.7.2.2 Clean external surfaces of parts using drycleaning solvent (C-304).

63.7.7.2.3 Dry with filtered, compressed air.

63.7.7.3 Inspection

63.7.7.3.1 Inspect quill for signs of leakage.

63.7.7.3.2 Inspect quill and pinion gear for obvious mechanical and corrosion damage (BHT-212-CR&O).

63.7.7.3.3 Rotate pinion and check for rough bearings. Bearing roughness which can be detected by feel is not acceptable.

63.7.7.4 Repair

For complete repair procedures, refer to BHT-212-CR&O.

63.7.7.5 Installation

MATERIALS REQUIRED

Refer to BHT-ALL-SPM for specification and source.

NUMBER	NOMENCLATURE
C-308	Sealant
C-405	Lockwire

63.7.7.5.1 Remove cover from mounting port in transmission.

63.7.7.5.2 Ensure mating surfaces of quill and transmission are free of all sealant and other foreign matter. Clean as required.

63.7.7.5.3 Lubricate new packing (1, Figure 63-53) with transmission oil (Chapter 12). Install packing in groove on rotor brake quill (2).

63.7.7.5.4 Apply a light coat of transmission

• COPYRIGHT © 2007 BY DART AEROSPACE LTD. •
THIS DOCUMENT IS PRIVATE AND CONFIDENTIAL AND IS SUPPLIED ON THE EXPRESS CONDITION THAT IT IS NOT TO BE USED FOR ANY PURPOSE OR COPIED OR COMMUNICATED TO ANY OTHER PERSON WITHOUT WRITTEN PERMISSION FROM DART AEROSPACE LTD.

oil to bore of transmission quill port and to mating diameter of quill assembly.

63.7.7.5.5 Using a heating lamp or 250 watt light bulb, heat sump mounting port until unit is hot to the touch.

CAUTION

ROTOR BRAKE QUILL ASSEMBLIES HAVE LOOKALIKE GEARS. ENSURE SIX HOLE PINION IS ONLY INSTALLED IN TRANSMISSION. INSTALLATION OF INCORRECT QUILL ASSEMBLY WILL RESULT IN INTERNAL TRANSMISSION DAMAGE.

NOTE

During installation of quill assembly, lightly tap quill inward uniformly around face of quill flange near outer edge with a plastic mallet. Do not strike end of quill shaft.

63.7.7.5.6 Insert rotor brake quill into transmission while rotating pinion simultaneously to permit gear meshing.

63.7.7.5.7 Install aluminum washers (3) against flange of quill, steel washers (4) under head of bolts (5) and install bolts. Torque bolts 160 to 190 inch-lbs. (18.1 to 21.47 Nm).

63.7.7.5.8 Check quill pinion for freedom of rotation and existence of backlash.

63.7.7.5.9 Deleted

63.7.7.5.10 Fill gap between flange on quill (2) and flange on transmission sump with sealant (C-308). Also fill jackscrew holes with sealant. Allow to cure.

63.7.7.5.11 Install inboard brake assembly half.

63.7.7.5.12 If not previously accomplished, Install brake disc.

63.7.7.5.13 Install outboard brake assembly half.

• COPYRIGHT © 2007 BY DART AEROSPACE LTD. •
THIS DOCUMENT IS PRIVATE AND CONFIDENTIAL AND IS SUPPLIED ON THE EXPRESS CONDITION THAT IT IS NOT TO BE USED FOR ANY PURPOSE OR COPIED OR COMMUNICATED TO ANY OTHER PERSON WITHOUT WRITTEN PERMISSION FROM DART AEROSPACE LTD.

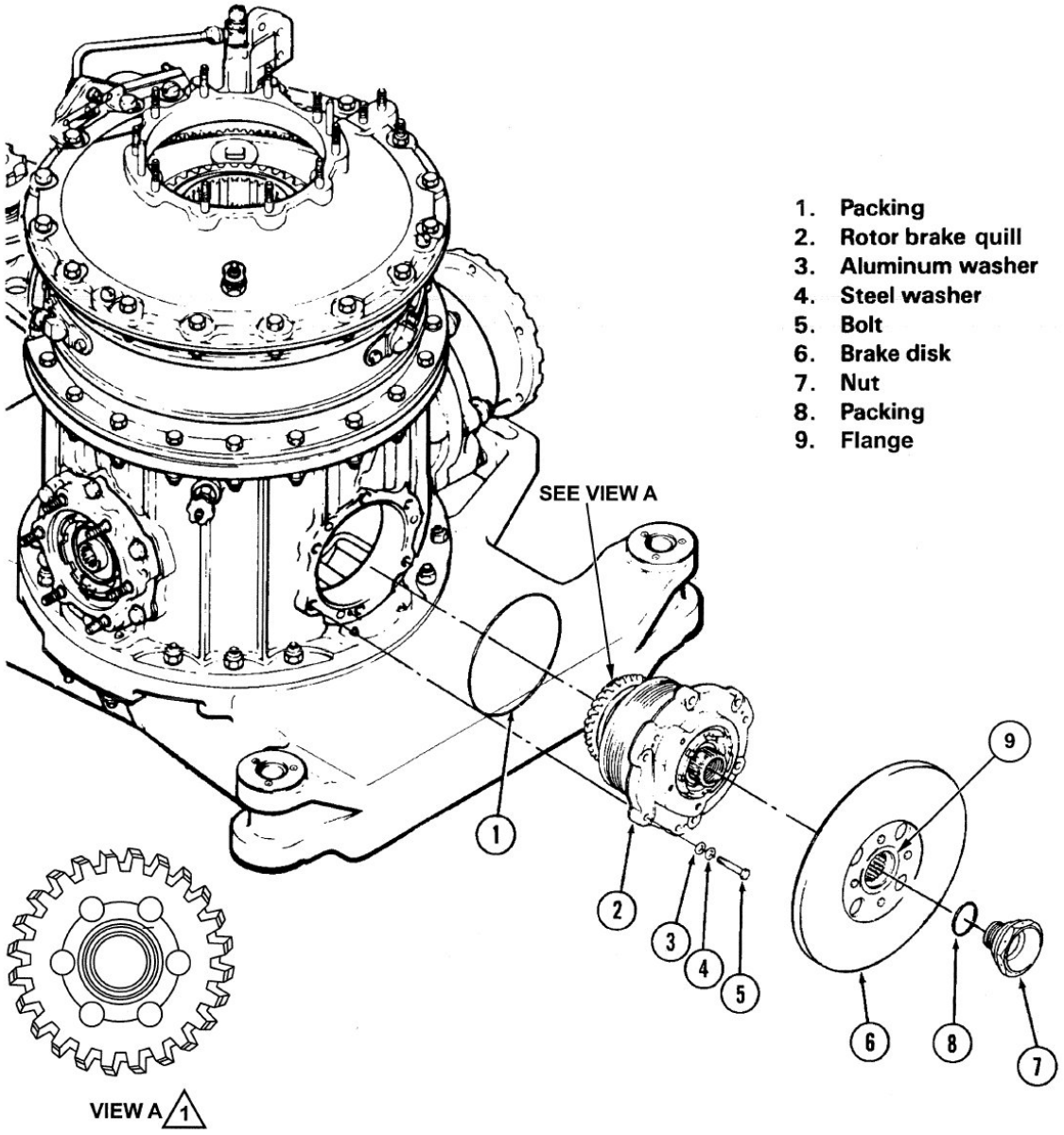

NOTE

1 **The 412-040-123-101 quill assembly contains a look alike gear. Ensure pinion has six holes before installation in transmission.**

Figure 63-51. Rotor Brake Quill

• COPYRIGHT © 2007 BY DART AEROSPACE LTD. •
THIS DOCUMENT IS PRIVATE AND CONFIDENTIAL AND IS SUPPLIED ON THE EXPRESS CONDITION THAT IT IS NOT TO BE USED FOR ANY PURPOSE OR COPIED OR COMMUNICATED TO ANY OTHER PERSON WITHOUT WRITTEN PERMISSION FROM DART AEROSPACE LTD.

63.8 TRANSMISSION QUILL PORT COVERS

NOTE

Removal and installation procedures for left and right quill port covers are identical. The following procedures detail removal and installation of rotor brake quill port cover, which is used when there is no rotor brake quill installed.

63.8.1 Removal

SPECIAL TOOLS REQUIRED

NUMBER	NOMENCLATURE
T100929	Jackscrew set

63.8.1.1 Drain transmission (Chapter 12).

63.8.1.2 Remove bolts (4, Figure 63-52).

63.8.1.3 Cut sealant from around edge of cover (5) using a sharp non-metallic scraper.

63.8.1.4 Clean sealant from tapped holes (6).

63.8.1.5 Install jackscrew set, T100929, in three tapped holes (6).

63.8.1.6 Carefully and evenly, tighten all three jackscrews and remove cover.

63.8.1.7 Remove and discard packing (1).

63.8.2 Installation

MATERIALS REQUIRED

Refer to BHT-ALL-SPM for specification and source.

NUMBER	NOMENCLATURE
C-308	Adhesive

63.8.2.1 Lubricate new packing (1, Figure 63-52) with transmission oil (Chapter 12).

63.8.2.2 Install packing (1) on cover (5).

63.8.2.3 Place cover (5) over transmission quill port and install bolts (4) with steel washers (3) under heads and aluminum washers (2) next to cover (5). Torque bolts (4) 160 to 190 inch-lbs. (18.1 to 21.4 Nm).

63.8.2.4 Apply a bead of adhesive (C-308) around perimeter of cover (5) where it meets transmission case (7).

• COPYRIGHT © 2007 BY DART AEROSPACE LTD. •
THIS DOCUMENT IS PRIVATE AND CONFIDENTIAL AND IS SUPPLIED ON THE EXPRESS CONDITION THAT IT IS NOT TO BE USED FOR ANY PURPOSE OR COPIED OR COMMUNICATED TO ANY OTHER PERSON WITHOUT WRITTEN PERMISSION FROM DART AEROSPACE LTD.

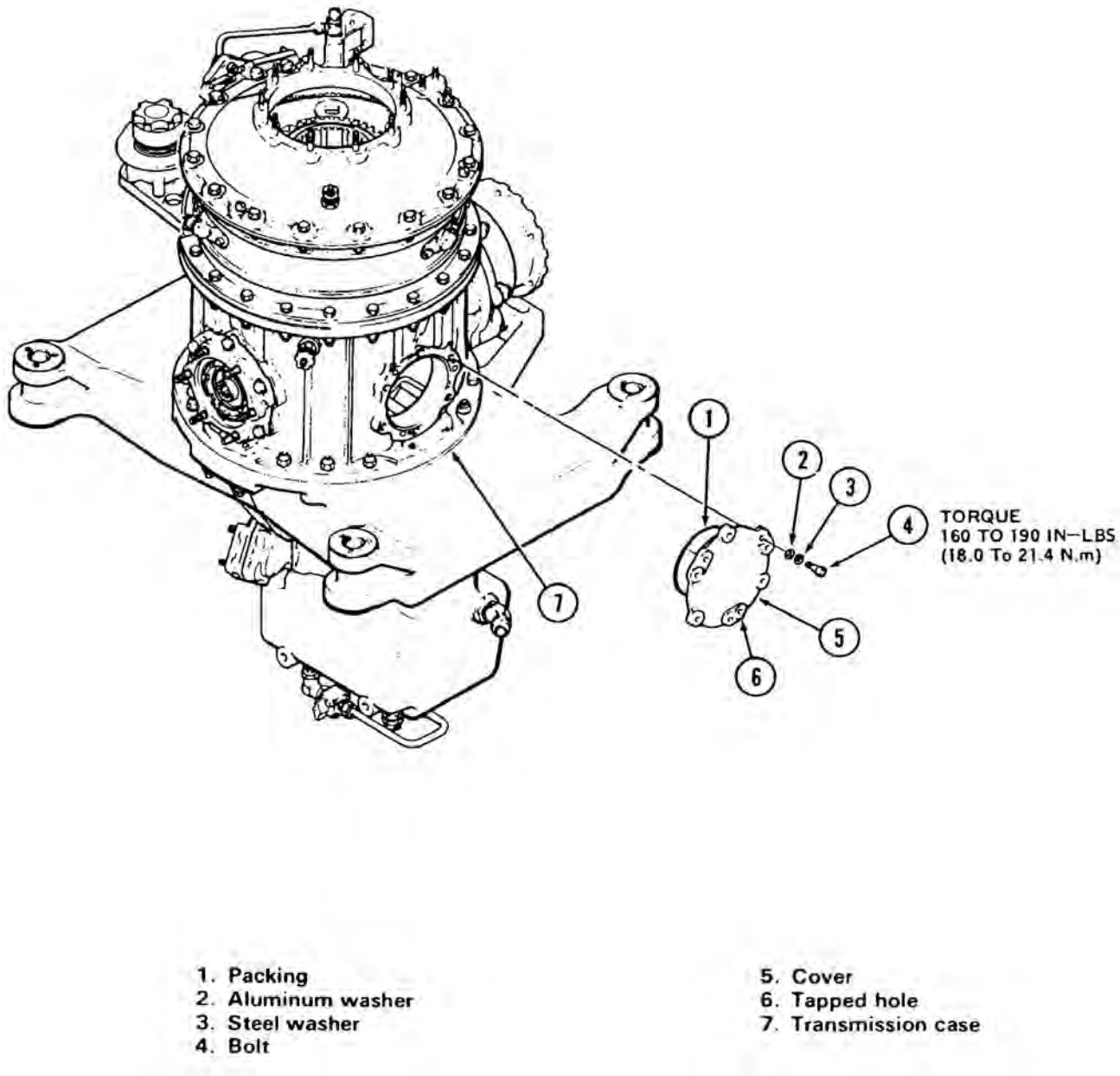

Figure 63-52. Quill Port Covers

• COPYRIGHT © 2007 BY DART AEROSPACE LTD. •
THIS DOCUMENT IS PRIVATE AND CONFIDENTIAL AND IS SUPPLIED ON THE EXPRESS CONDITION THAT IT IS NOT TO BE USED FOR ANY PURPOSE OR COPIED OR COMMUNICATED TO ANY OTHER PERSON WITHOUT WRITTEN PERMISSION FROM DART AEROSPACE LTD.

63.9 TRANSMISSION MOUNTS

63.9.1 Pylon Mounts

Five vibration isolating mounts located on the support structure of the fuselage (Figure 63-53) are provided to mount the transmission. A special bolt is used to secure transmission to mounts.

63.9.2 Maintenance

63.9.2.1 Removal

63.9.2.1.1 Remove transmission assembly (paragraph 63.4.5.1). Components need not be removed from transmission mast if only pylon mounts are going to be removed.

63.9.2.1.2 Detach each of four main mounts from pylon support by removing four bolts and washers from mount flange. On each of two rear mounts: Either disconnect friction damper (11, Figure 63-53), lower end fork from fitting (14) in pylon support to allow damper to be removed with mount assembly; or disconnect upper end of damper from lower end of mount bolt to allow damper to remain in pylon support.

63.9.2.1.3 Lift each main mount assembly from pylon support, including mount bolt (with dampers on rear mounts, if left attached). Tag filler plates (10 and 16) for forward or rear locations. Separate upper and lower bushings (17 and 20), boots (19), and bolts (15) from mounts (18).

63.9.2.1.4 Detach fifth mount (5) from fifth mount support (1) by cutting lockwire and removing four bolts and washers from mount flange. Lift out mount assembly. Tag laminated filler plates (6) for location.

63.9.2.1.5 Remove cotter pin and nut from fifth mount eyebolt (2). Separate retaining washer, mount (5), boot (4), and upper washer (3) from eye bolt (2).

63.9.2.1.6 Detach fifth mount support (1) from pylon support by removing four bolts and washers at each end. Leave fillers bonded to pylon support.

63.9.2.2 Inspection

63.9.2.2.1 Replace pylon mounts, (5, 9, and 18, Figure 63-53) under following conditions.

63.9.2.2.1.1 When excessive vibrations in flight operation are believed to indicate mounts no longer have correct spring rate to isolate normal pylon vibrations.

63.9.2.2.1.2 When rubber-to-metal bond has separated deeper than raised rubber fillets at inner and outer metal sleeves.

63.9.2.2.2 Replace any damaged boots.

63.9.2.2.3 Replace mount bolts (2 or 15), bushings (17 and 20), or washer (3) for any indication of cracks, or when unserviceable due to wear, scoring, or other surface damage.

63.9.2.2.4 Replace friction dampers (11) for any evidence of malfunction. After a hard landing, perform Conditional Inspection as required (Chapter 5).

63.9.2.2.5 Perform spring rate check as follows:

63.9.2.2.5.1 Fabricate a steel support sleeve, and pressing button workaids, Figure 63-54. Top and bottom of the sleeve must be square in relation to sides so mount will be deflected in vertical plane only.

63.9.2.2.5.2 Place mount, long end down, into support sleeve workaid.

63.9.2.2.5.3 Place support and mount into a suitable arbor press (pressure gage of arbor press should be marked in five pound graduations and have a range of 0 to 1500 lbs. (0 to 4448 N).

63.9.2.2.5.4 Center pressing button workaid over inner sleeve of mount.

63.9.2.2.5.5 Apply pressure to bottom and

• COPYRIGHT © 2007 BY DART AEROSPACE LTD. •
THIS DOCUMENT IS PRIVATE AND CONFIDENTIAL AND IS SUPPLIED ON THE EXPRESS CONDITION THAT IT IS NOT TO BE USED FOR ANY PURPOSE OR COPIED OR COMMUNICATED TO ANY OTHER PERSON WITHOUT WRITTEN PERMISSION FROM DART AEROSPACE LTD.

mount with press ram so as to deflect mount in a vertical plane, not to exceed 0.25 inch (6.35 mm) deflection. Cycle mount five or six times.

63.9.2.2.5.6 Mount a dial indicator to arbor press with finger of indicator touching pressing button.

63.9.2.2.5.7 Apply slight pressure to button with ram to ensure it is seated.

63.9.2.2.5.8 On 204-031-927-007 pylon mount, apply enough pressure to pressing button to deflect mount 0.10 inch (2.54 mm). If pressure required to deflect mount 0.10 inch (2.54 mm) is 405 to 495 lbs. (1801 to 2201 N), mount is serviceable.

63.9.2.2.5.9 On 204-031-927-005 pylon mount, apply enough pressure to pressing button to deflect mount 0.10 inch (2.54 mm). If pressure required to deflect mount 0.10 inch (2.54 mm) is 900 to 1100 lbs. (4003 to 4893 N), mount is serviceable.

63.9.2.3 Installation

MATERIALS REQUIRED

Refer to BHT-ALL-SPM for specification and source.

NUMBER	NOMENCLATURE
C-313	Adhesive
C-405	Lockwire

CAUTION

ISOLATION MOUNT INSTALLATION BOLTS (22 AND 23 FIGURE 63-53) ARE DIFFERENT LENGTHS. REFER TO VIEW A, FIGURE 63-53 FOR PROPER INSTALLATION.

63.9.2.3.1 Install each of four main mounts as follows:

63.9.2.3.1.1 Assemble steel bushing (17, Figure 63-53) on bolt (15). Insert bolt (15) through mount (18) from longer end of mount. Ensure bushing is properly seated on bolt and mount. Position bushing (20) on bolt and mount. Install boots (19) on each end of mount.

63.9.2.3.1.2 On rear mounts, if dampers were removed with mounts: Attach friction damper (11) upper fitting to clevis on lower end of mount bolt (15) with a bolt, nut, and washer.

63.9.2.3.1.3 Place filler plate (10 or 16) on mount below flange. Position assembly in opening on pylon support. Attach mount flange and filler plate to support with two bolts (22), two bolts (23), and thin steel washers (21). Torque bolts 100 to 140 inch-lbs. (11.30 to 15.82 Nm).

63.9.2.3.1.4 Align rear mount damper (11) lower end fork on fitting (14). Secure with bolt, washer, and nut.

63.9.2.3.2 Install fifth mount as follows:

63.9.2.3.2.1 Assemble boot (4) and washer (3) on shortest end of mount. Insert eyebolt (2) through washer and mount. Install washer and nut on lower end of bolt, torque 480 to 600 inch-lbs. (54.23 to 67.79 Nm) and secure with cotter pin.

63.9.2.3.2.2 Position mount assembly in fifth mount support (1), with two laminated filler plates (6) under mount flange. Attach with four bolts (25) and washers (24). Secure boltheads in pairs with lockwire (C-405).

NOTE

When transmission is installed, it may be necessary to peel filler plates for alignment. Add one washer per bolt for every 0.06 inch (1.52 mm) lamination removed. Check bolt for correct amount of thread engagement before installing.

63.9.2.3.2.3 If support fitting was removed, check mounting points on rear of pylon support for fillers bonded to structure to provide clearance for fitting over rivet heads. (Not more than two fillers at each side, bonded at 65 to 85°F (18 to 29°C) with adhesive (C-313)). Position fitting on pylon support, and attach each end with four bolts and washers.

• COPYRIGHT © 2007 BY DART AEROSPACE LTD. •
THIS DOCUMENT IS PRIVATE AND CONFIDENTIAL AND IS SUPPLIED ON THE EXPRESS CONDITION THAT IT IS NOT TO BE USED FOR ANY PURPOSE OR COPIED OR COMMUNICATED TO ANY OTHER PERSON WITHOUT WRITTEN PERMISSION FROM DART AEROSPACE LTD.

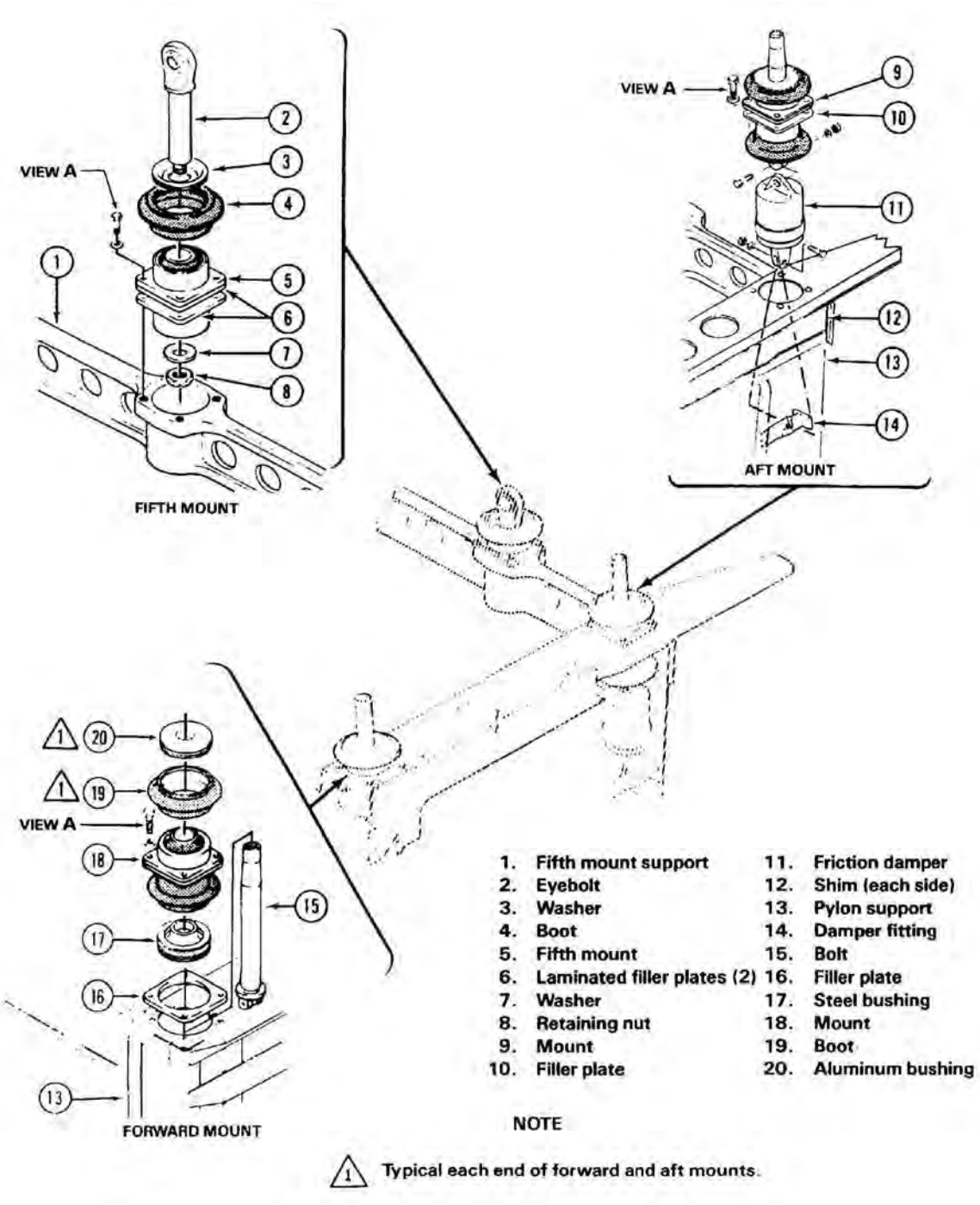

Figure 63-53. Transmission Pylon Mounts (Sheet 1 of 2)

• COPYRIGHT © 2007 BY DART AEROSPACE LTD. •
THIS DOCUMENT IS PRIVATE AND CONFIDENTIAL AND IS SUPPLIED ON THE EXPRESS CONDITION THAT IT IS NOT TO BE USED FOR ANY PURPOSE OR COPIED OR COMMUNICATED TO ANY OTHER PERSON WITHOUT WRITTEN PERMISSION FROM DART AEROSPACE LTD.

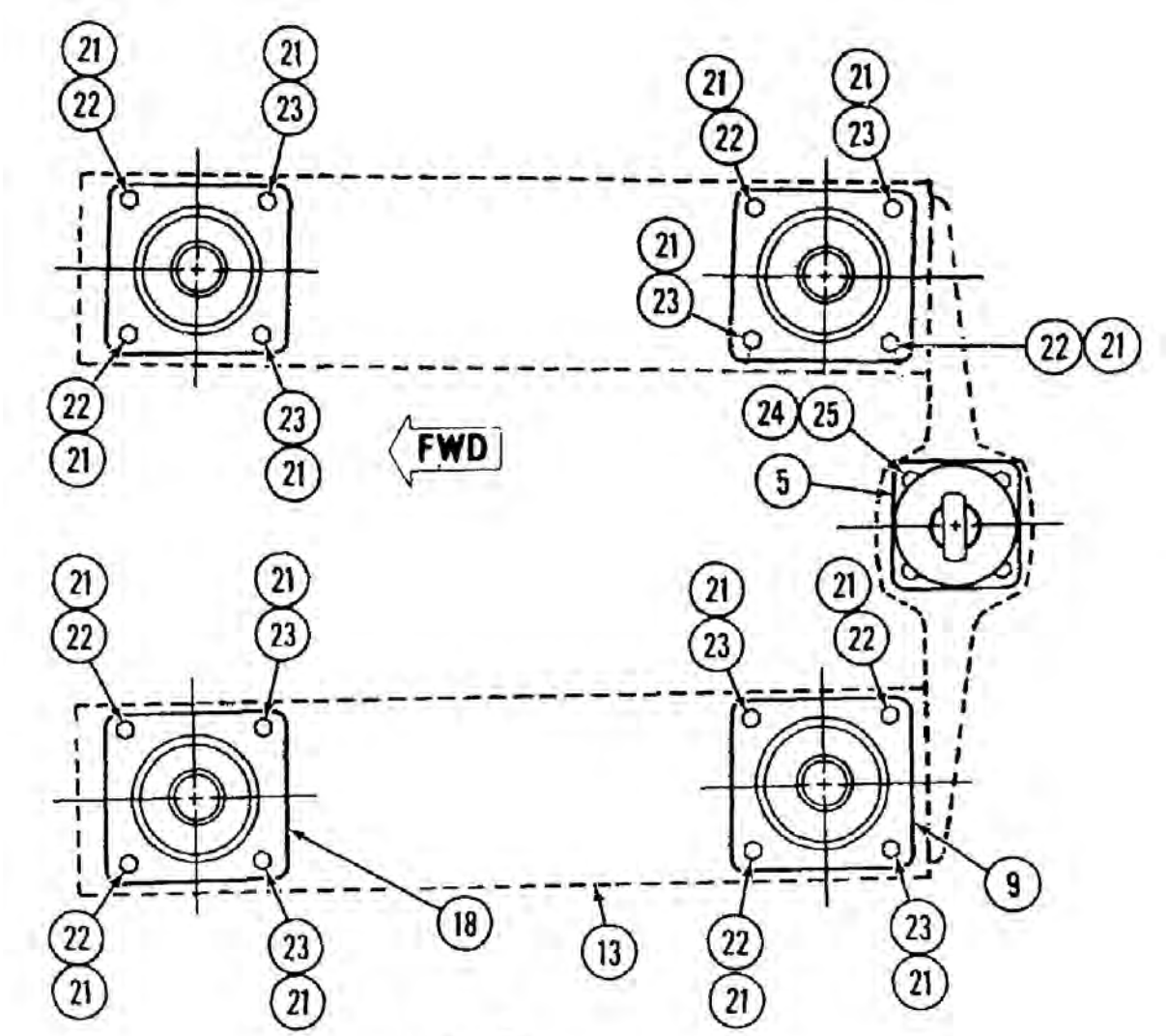

VIEW **A**

MOUNT ASSEMBLY BOLT PATTERN

21. AN960-516L Washer
22. AN175-12A Bolt
23. AN175-11A Bolt
24. AN960-416 Washer
25. AN4H6A Bolt

Figure 63-53. Transmission Pylon Mounts (Sheet 2 of 2)

• COPYRIGHT © 2007 BY DART AEROSPACE LTD. •
THIS DOCUMENT IS PRIVATE AND CONFIDENTIAL AND IS SUPPLIED ON THE EXPRESS CONDITION THAT IT IS NOT TO BE USED FOR ANY PURPOSE OR COPIED OR COMMUNICATED TO ANY OTHER PERSON WITHOUT WRITTEN PERMISSION FROM DART AEROSPACE LTD.

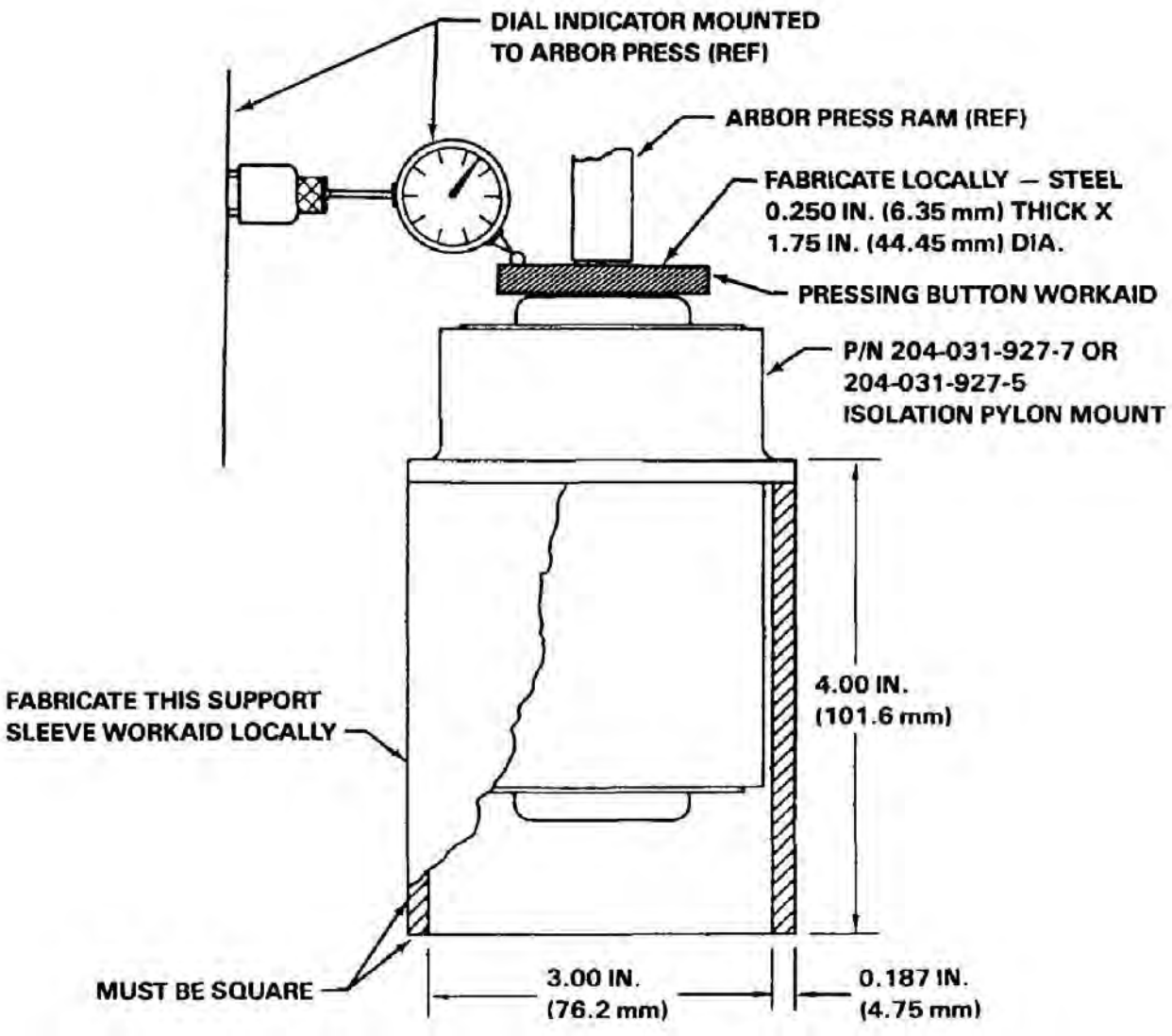

Figure 63-54. Isolation Mount Test Fixture

• COPYRIGHT © 2007 BY DART AEROSPACE LTD. •
THIS DOCUMENT IS PRIVATE AND CONFIDENTIAL AND IS SUPPLIED ON THE EXPRESS CONDITION THAT IT IS NOT TO BE USED FOR ANY PURPOSE OR COPIED OR COMMUNICATED TO ANY OTHER PERSON WITHOUT WRITTEN PERMISSION FROM DART AEROSPACE LTD.

63.9.2.3.2.4 Make sure lift link lower end is securely attached in fitting on lift beam with bolt, washers, nut, and cotter pin.

63.9.2.3.2.5 Install transmission.

63.9.3 Friction Dampers

The friction dampers (Figure 63-53) are cylindrical units connected between the lower ends of the mount bolts and fittings in the pylon support structure.

63.9.3.1 Removal

63.9.3.1.1 Open transmission cowling.

63.9.3.1.2 Remove nut and bolt securing damper (11, Figure 63-53) to mount (9).

63.9.3.1.3 Remove nut, washer, and bolt attaching friction damper (11) to fitting (14) on pylon support (13). Remove damper from support.

NOTE

Pylon friction dampers may be overhauled. Damper overhaul kits or refurbished friction dampers may be obtained from:

Lord Kinematics Refurbishment Department
1635 West 12th Street
Erie, Pennsylvania 16512

63.9.3.2 Inspection

63.9.3.2.1 If friction dampers for pylon rear main mounts are suspected of being contaminated with grease or oil, they should be disassembled and inspected.

63.9.3.2.2 Inspect dampers for binding, rough movement, or actual lack of movement by stationing personnel around pylon mounting point. Move pylon fore-and-aft using the mast as a lever to rock pylon. If any of the above conditions are noted, replace dampers.

63.9.3.2.3 Inspect bearing and damper fittings on friction dampers for a maximum acceptable radial movement of 0.004 inch (0.102 mm).

63.9.3.3 Installation

63.9.3.3.1 Install bolt, washers, and nut securing friction damper (11, Figure 63-53) to fitting (14) on pylon support (13). Torque nut 80 to 100 inch-lbs. (9.04 to 11.30 Nm).

63.9.3.3.2 Install bolt, washer, and nut securing damper (11) to mount (9).

63.9.3.3.3 Close transmission cowling.

63.9.4 Lift Link

The lift link consists of two roll staked bearings, one located on each end. The lift link is located underneath the forward side of the transmission support case.

63.9.4.1 Removal

SPECIAL TOOLS REQUIRED

NUMBER	NOMENCLATURE
T101581	Maintenance Hoist or Equivalent

63.9.4.1.1 Open and remove cowling, fairings, firewalls, and baffles, as required, for access to lift link.

63.9.4.1.2 Erect maintenance hoist (T101581), or provide other suitable hoisting equipment to steady transmission.

63.9.4.1.3 Install clevis on top of mast. Attach hoist to clevis and take up slack.

63.9.4.1.4 Disconnect lift link from transmission as follows:

63.9.4.1.4.1 Transmissions with lift link attachment point as an integral part of support case.

63.9.4.1.4.1.1 Remove nut and washer from bolt assembly (11, Figure 63-11).

63.9.4.1.4.1.2 Raise transmission sufficiently to free bolt assembly (11) and remove bolt assembly.

• COPYRIGHT © 2007 BY DART AEROSPACE LTD. •
THIS DOCUMENT IS PRIVATE AND CONFIDENTIAL AND IS SUPPLIED ON THE EXPRESS CONDITION THAT IT IS NOT TO BE USED FOR ANY PURPOSE OR COPIED OR COMMUNICATED TO ANY OTHER PERSON WITHOUT WRITTEN PERMISSION FROM DART AEROSPACE LTD.

Keep attaching parts with link.

63.9.4.1.4.2 Transmissions with lift link fitting (13).

63.9.4.1.4.2.1 Remove nut and washer from bolt assembly (14).

63.9.4.1.4.2.2 Raise transmission sufficiently to free bolt assembly (14) and remove bolt assembly and washer (12). Keep attaching parts with link.

63.9.4.2 Cleaning

MATERIALS REQUIRED

Refer to BHT-ALL-SPM for specification and source.

NUMBER	NOMENCLATURE
C-304	Solvent

CAUTION

DO NOT IMMERSE BEARING END OF LINK IN SOLVENT.

63.9.4.2.1 Wipe link clean with a clean, lint-free cloth dampened with solvent (C-304).

63.9.4.2.2 Dry with clean, dry cloths or filtered compressed air.

63.9.4.3 Inspection and repair

For inspection and repair of the lift link, refer to BHT-212-CR&O.

63.9.4.4 Installation

MATERIALS REQUIRED

Refer to BHT-ALL-SPM for specification and source.

NUMBER	NOMENCLATURE
C-101	Corrosion Preventive Compound
C-104	Corrosion Preventive Compound

63.9.4.4.1 Install upper end of lift link as follows:

NOTE

Ensure bolt assembly (11 or 14, Figure 63-11) has a bushing bonded to shank.

63.9.4.4.1.1 Transmissions with lift link attachment point as an integral part of support case.

63.9.4.4.1.1.1 Lightly coat bolt assembly (11), washer, and nut with corrosion preventive compound (C-104).

63.9.4.4.1.1.2 Align upper end of lift link (10) with holes in transmission support lugs and install bolt assembly (11).

63.9.4.4.1.1.3 Secure bolt assembly (11) with washer and nut. Torque nut 60 to 80 foot-lbs. (81 to 108 Nm). Install cotter pin.

63.9.4.4.1.2 Transmissions with lift link fitting (13).

63.9.4.4.1.2.1 Lightly coat bolt assembly (14), washer (12), washer (15), and nut with corrosion preventive compound (C-104).

63.9.4.4.1.2.2 Align upper end of lift link with holes in lift link fitting (13). Align washer (12) between lift link and lift link fitting and install bolt assembly (14).

63.9.4.4.1.2.3 Secure bolt (14) with washer(s) (15) and nut. Torque nut 60 to 80 foot-lbs. (81 to 108 Nm). Install cotter pin.

63.9.4.4.2 Lightly coat bolt assembly (9), washer, and nut with corrosion preventive compound (C-101).

NOTE

Lift transmission, as required, so bolt assembly (9) can be easily installed.

63.9.4.4.3 Align lower end of lift link with fitting and install bolt assembly (9), washer, and nut. Torque nut 108 to 125 foot-lbs. (146.426 to 169.475 Nm). Secure with cotter pin.

63.9.4.4.4 Disconnect hoist equipment, and

• COPYRIGHT © 2007 BY DART AEROSPACE LTD. •
THIS DOCUMENT IS PRIVATE AND CONFIDENTIAL AND IS SUPPLIED ON THE EXPRESS CONDITION THAT IT IS NOT TO BE USED FOR ANY PURPOSE OR COPIED OR COMMUNICATED TO ANY OTHER PERSON WITHOUT WRITTEN PERMISSION FROM DART AEROSPACE LTD.

reinstall all firewalls, baffles, fairings, cowlings, and access doors.

63.10 SERVICEABILITY CHECKS

63.10.1 Transmission Serviceability

This procedure shall be performed when any doubt exists as to serviceability of a transmission after finding metal particles in oil.

63.10.1.1 Drain transmission, oil cooler, and connecting lines. Insert magnet in pump screen boss or plug boss to check for additional contamination.

63.10.1.2 Flush oil cooler and connecting lines with clean transmission oil (Chapter 12).

63.10.1.3 Clean and install chip detector plug, pump inlet screen, and sump oil filter. Replace external oil filter element.

CAUTION

NOTE CONDITION OF PACKINGS, SEALS, AND GASKETS BEFORE INSTALLATION OF TRANSMISSION. REPLACE PART(S) IF DAMAGED.

63.10.1.4 Service transmission with clean oil (Chapter 12).

63.10.1.5 Ground run helicopter (FMS-D212-725-1) for one hour at 100% rotor rpm, with maximum collective pitch that can be maintained without becoming airborne.

63.10.1.6 Drain transmission oil into clean container and inspect for chips. Inspect sump filter and chip detector.

63.10.1.7 If number of particles has increased, or if there are particles that can be visually identified as chips or flakes from a gear or bearing, replace transmission, mast assembly, and transmission oil cooler, and flush oil lines. If number of particles has decreased and only minute particles are found, continue transmission in service.

63.10.1.8 After five hours of operation, inspect sump filter and chip detector.

63.10.1.9 If the number of particles has increased, or if there are particles that can be visually identified as chips or flakes from a gear or bearing, replace transmission, mast assembly, and transmission oil cooler, and flush oil lines. If the number of particles has decreased and only minute particles are found, continue the transmission service.

63.10.2 Intermediate or Tail Rotor Gearbox - Serviceability

63.10.2.1 Remove, inspect, and clean appropriate chip detector.

63.10.2.2 Drain gearbox oil into a clean container. Inspect oil for chips.

63.10.2.3 Flush gearbox with clean oil (Chapter 12). Inspect oil for chips.

63.10.2.4 Service gearbox with clean oil.

63.10.2.5 Accomplish ground run in accordance with paragraph 63.10.1.

63.10.2.6 Repeat steps 63.10.2.1, 63.10.2.2, and 63.10.2.4 above.

63.10.2.7 If number of particles has increased, or if particles can be visually identified as chip or flakes from a gear or bearing, replace gearbox. If number of particles has decreased and only minute particles are found, continue gearbox in service.

63.10.2.8 After 5 hours of service, repeat steps 63.10.2.1, 63.10.2.2, and 63.10.2.4 above.

63.10.2.9 If the number of particles has increased or particles can be visually identified as chips or flakes from a gear or bearing, replace gearbox. If number of particles has decreased and only minute particles are found, continue gearbox in service.

• COPYRIGHT © 2007 BY DART AEROSPACE LTD. •
THIS DOCUMENT IS PRIVATE AND CONFIDENTIAL AND IS SUPPLIED ON THE EXPRESS CONDITION THAT IT IS NOT TO BE USED FOR ANY PURPOSE OR COPIED OR COMMUNICATED TO ANY OTHER PERSON WITHOUT WRITTEN PERMISSION FROM DART AEROSPACE LTD.

CHAPTER 63 – MAIN ROTOR DRIVE SYSTEM (63-00-00)

63.11 ROTOR BRAKE SYSTEM

The rotor brake system is an optional equipment kit. For additional information on initial kit installation, refer to the BHT-212-SI-6

Hydraulic pressure to operate the rotor brake system is provided by actuation of handle on master cylinder located in the cabin roof.

For maintenance procedures applicable to rotor brake pads and brake assembly, refer to Loral Manual Q70-2 available from:
Loral Aircraft Braking System
1210 Massillon Road Akron, Ohio 44315

For maintenance procedures applicable to rotor brake master cylinder, quill assembly and brake assembly, refer to BHT-212-CR&O manual.

63.11.1 Rotor Brake System Troubleshooting

Table 63-3 lists probable causes, isolation procedures, and remedies and is intended to aid in rotor brake system troubleshooting.

Table 63-3. Rotor Brake System - Troubleshooting

Indication of Trouble	Probable Cause	Corrective Action
No braking action	Insufficient fluid in system	Fill and bleed system
	Foreign substance in fluid	Purge system
	Primary valve open	Replace master cylinder
	Relief valve open	Replace master cylinder
	Excessive brake lining wear	Replace lining
Spongy action of control	Air in system	Fill and bleed system
Loss of braking action	Worn seal in master cylinder	Replace master cylinder
	Worn seal in brake assembly	Replace brake assembly
	Excessive brake lining wear	Replace lining
Leaks at master cylinder	Worn or damaged seal in cylinder	Replace master cylinder seals
Leaks at brake assembly	Worn or damaged seals in brake assembly	Replace brake assembly seals
Indicator light inoperative	Burnt out bulbs	Replace bulbs
	Loose electrical connection	Tighten connections
	Broken or disconnected wire	Replace or connect wire
	Improper microswitch adjustment	Adjust microswitches
Indicator light illuminates when master cylinder not applied	Faulty microswitch	Replace switch
	Improper microswitch adjustment	Adjust microswitches
	Lining binding	Clean brake cylinder

• COPYRIGHT © 2007 BY DART AEROSPACE LTD. •
THIS DOCUMENT IS PRIVATE AND CONFIDENTIAL AND IS SUPPLIED ON THE EXPRESS CONDITION THAT IT IS NOT TO BE USED FOR ANY PURPOSE OR COPIED OR COMMUNICATED TO ANY OTHER PERSON WITHOUT WRITTEN PERMISSION FROM DART AEROSPACE LTD.

63.11.2 Bleeding

NOTE
Bleeding is invalid if hydraulic quick disconnect is removed.

Refer to paragraph 63.11.3 and 63.11.4 as applicable

63.11.3 Bleeding - Brake Assembly P/N 9450103

SPECIAL TOOLS REQUIRED

NUMBER	NOMENCLATURE
Commercial	Rubber Hose

NOTE
Drain a minimum of one half pint (236.6 ml) of fluid from each valve before starting bleeding operation.

63.11.3.1 Check master cylinder (6, Figure 63-55) for proper fluid level (Chapter 12).

NOTE
Ensure rubber hose used in step 63.11.3.2 is clean.

63.11.3.2 Place one end of a length of clean rubber hose on bleed valve (3) extension.

63.11.3.3 Route other end of hose to a suitable container in order to capture brake fluid discharged during bleeding operation.

63.11.3.4 Open one bleed valve (3).

NOTE
Do not allow handle to pass center into fully deployed position.

63.11.3.5 Slowly pull handle (5) down and hold before the fully deployed position.

63.11.3.6 Close bleed valve (3).

63.11.3.7 Service fluid in master cylinder (6) (Chapter 12)

63.11.3.8 Repeat step 63.11.3.2 through step 63.11.3.6 until discharged fluid is free of air.

63.11.4 Bleeding - Brake Assembly P/N 9450103-1

MATERIALS REQUIRED

Refer to BHT-ALL-SPM for specification and source.

NUMBER	NOMENCLATURE
C-304	Drycleaning Solvent

NOTE
Drain a minimum of one half pint (236.6 ml) of fluid from each valve before starting bleeding operation.

63.11.4.1 Check master cylinder (6, Figure 63-55) for proper fluid level (Chapter 12)

63.11.4.2 Place rags under bleed valves (3) to catch fluid during bleeding.

63.11.4.3 Slowly open one bleed valve.

NOTE
Do not allow handle to pass center into fully deployed position.

63.11.4.4 Slowly pull handle (5) down and hold before the fully deployed position.

63.11.4.5 Close bleed valve (3).

63.11.4.6 Service fluid in master cylinder (6) (Chapter 12)

63.11.4.7 Return handle (5) to stowed position.

63.11.4.8 Repeat step 63.11.4.2 through step 63.11.4.7 until discharged fluid is free of air.

63.11.4.9 Repeat step 63.11.4.2 through step 63.11.4.8 for other bleed valve (3).

63.11.4.10 Clean area of any spilled fluid with drycleaning solvent (C-304).

• COPYRIGHT © 2007 BY DART AEROSPACE LTD. •
THIS DOCUMENT IS PRIVATE AND CONFIDENTIAL AND IS SUPPLIED ON THE EXPRESS CONDITION THAT IT IS NOT TO BE USED FOR ANY PURPOSE OR COPIED OR COMMUNICATED TO ANY OTHER PERSON WITHOUT WRITTEN PERMISSION FROM DART AEROSPACE LTD.

63.12 ROTOR BRAKE SYSTEM COMPONENTS

63.12.1 Master Cylinder - Removal

MATERIALS REQUIRED

Refer to BHT-ALL-SPM for specification and source.

NUMBER	NOMENCLATURE
C-304	Drycleaning Solvent

CAUTION

CLEANING HYDRAULIC COMPONENTS SHALL BE ACCOMPLISHED WITH DRYCLEANING SOLVENT (C-304) ONLY. DO NOT USE ALCOHOL.

63.12.1.1 Open Transmission fairing (Chapter 52).

63.12.1.2 On cabin roof, remove sealing compound from around top of master cylinder reservoir (6, Figure 63-55).

63.12.1.3 Gain access to master cylinder (6) located inside cabin above pilot seat.

CAUTION

USE SUITABLE PRECAUTIONS TO PROTECT PILOT SEAT AND CABIN INTERIOR FROM HYDRAULIC FLUID WHEN LOOSENING HYDRAULIC LINE.

NOTE

Drain hydraulic fluid into suitable container.

63.12.1.4 Loosen hydraulic line (2) from end of master cylinder (6) and allow fluid to drain into suitable container.

63.12.1.5 Disconnect hydraulic line (2) from master cylinder.

63.12.1.6 Plug openings to prevent entry for foreign materials.

63.12.1.7 Remove bolts, nuts and washers attaching master cylinder (6) to roof structure

63.12.1.8 Remove master cylinder (6).

63.12.2 Master Cylinder - Inspection

Refer to the BHT-212-CR&O.

63.12.3 Master Cylinder - Repair

Refer to the BHT-212-CR&O.

63.12.3 Master Cylinder - Installation

MATERIALS REQUIRED

Refer to BHT-ALL-SPM for specification and source.

NUMBER	NOMENCLATURE
C-308	Adhesive

63.12.3.1 Locate master cylinder (6, Figure 63-55) to the right of overhead console inside cabin and attach to roof structure with four bolts, four nuts and eight washers.

63.12.3.2 Apply bead of sealant (C-308) to top of cabin roof surface around master cylinder (6) fill port.

63.12.3.3 Attach hydraulic line (2) to master cylinder

63.12.3.4 Bleed rotor brake system.

63.12.4 Brake Assembly - Removal (P/N 9450103)

NOTE

Maintenance practices are the same for brake assembly P/N 9450103 and 9450103-1, unless otherwise noted.

63.12.4.1 Remove microswitches (4, Figure 63-55) from rotor brake assembly (1).

63.12.4.2 Disconnect hydraulic line (2) from rotor brake assembly (1).

• COPYRIGHT © 2007 BY DART AEROSPACE LTD. •
THIS DOCUMENT IS PRIVATE AND CONFIDENTIAL AND IS SUPPLIED ON THE EXPRESS CONDITION THAT IT IS NOT TO BE USED FOR ANY PURPOSE OR COPIED OR COMMUNICATED TO ANY OTHER PERSON WITHOUT WRITTEN PERMISSION FROM DART AEROSPACE LTD.

63.12.4.3 Remove bolts (12, Figure 63-56), washers, and outboard brake assembly half (11).

63.12.4.4 Remove brake assembly spacer (23) from oil transfer tube (14) in inboard brake assembly half (5).

63.12.4.5 Remove Brake oil transfer tube (14) from inboard brake assembly half (5).

63.12.4.6 Remove and discard packings (22) from counterbored cavities in mating surfaces of inboard brake assembly (5) and outboard brake assembly (11).

63.12.4.7 Remove rotor brake disc.

63.12.4.8 Cut lockwire (4), remove bolts (2), washers (3), and inboard brake assembly half (5) from quill assembly (1).

63.12.5 Brake Assembly - Removal (P/N 9450103-1)

63.12.5.1 Disconnect hydraulic line (2), Figure 63-56) from rotor brake assembly (1).

NOTE

Access to bolts (2, Figure 63-56) can be achieved by turning rotor brake disc until holes in disc align with bolts.

63.12.5.2 Remove lockwire (4), bolts (2) and washers (3).

CAUTION

USE CARE SO AS NOT TO DAMAGE MICROSWITCH WIRING WHEN REMOVING BRAKE ASSEMBLY.

63.12.5.3 Remove rotor brake assembly (1, Figure 63-56) as a unit.

63.12.5.4 Remove lockwire (11), screws (9) and washers (10).

63.12.5.5 Remove microswitches (8).

63.12.5.6 Remove bolts (12, Figure 63-56), washers (13), and outboard brake assembly half (11).

63.12.5.7 Remove brake assembly spacer (23) from oil transfer tube (14) in inboard brake assembly half (5).

63.12.5.8 Remove brake oil transfer tube (14) from inboard brake assembly half (5).

63.12.5.9 Remove and discard packings (22) from counterbored cavities in mating surfaces of inboard brake assembly half (5) and outboard brake assembly half (11).

63.12.5.10 Remove rotor brake disc.

63.12.6 Brake Assembly - Inspection

63.12.6.1 Replace brake lining (16, Figure 63-56, Detail E) when worn within 0.150 inch (3.81 mm) or less of piston (21) or when overall thickness of brake lining (16) measures 0.289 inch (7.34 mm) or less.

63.12.6.2 Inspect brake assembly in accordance with Figure 63-57.

63.12.6.3 Inspect bolts (12) for cleanliness, damage and cracks.

63.12.6.4 Inspect piston return pin (19) for condition and nicks and burrs at cotter pin hole, which might damage return pin packing (20) on installation.

63.12.6.5 Inspect return spring (18) for rust and condition.

63.12.6.6 Inspect microswitches (8, Figure 63-55) for loose or cracked potting compound at electrical leads.

63.12.7 Brake Assembly - Repair

MATERIALS REQUIRED

Refer to BHT-ALL-SPM for specification and source.

• COPYRIGHT © 2007 BY DART AEROSPACE LTD. •
THIS DOCUMENT IS PRIVATE AND CONFIDENTIAL AND IS SUPPLIED ON THE EXPRESS CONDITION THAT IT IS NOT TO BE USED FOR ANY PURPOSE OR COPIED OR COMMUNICATED TO ANY OTHER PERSON WITHOUT WRITTEN PERMISSION FROM DART AEROSPACE LTD.

NUMBER	NOMENCLATURE
Commercial	400 Grit Aluminum Oxide Cloth
Commercial	Chromic Acid Solution MIL-C-5541

NOTE

Repair of the brake is limited to the replacement of damaged parts and to the specific repairs listed in this section and Figure 63-57, Detail A.

63.12.7.1 Clean nicks on pistons (21, Figure 63-56), piston cavity (24) and throat with 400 grit aluminum oxide cloth.

63.12.7.2 Replace any damaged fasteners.

63.12.7.3 Blend out nicks and burrs on shaft of piston return pin (19). Pay particular attention to the area around the cotter pin hole.

WARNING

CHROMIC ACID SOLUTIONS ARE CORROSIVE AND POISONOUS. PROTECT THE EYES AND HANDS. DO NOT BREATHE IN THE FUMES. OBEY MANUFACTURERS INSTRUCTIONS.

63.12.7.4 Treat reworked surfaces of piston (21) and exterior surfaces of brake assembly halves (5 and 11) with chromic acid solution MIL-C-5541.

63.12.8 Brake Assembly - Installation (P/N 9450103)

MATERIALS REQUIRED

Refer to BHT-ALL-SPM for specification and source.

NUMBER	NOMENCLATURE
C-405	Lockwire

NOTE

Ensure that microswitch is adjusted so that ROTR BRAKE light illuminates when brake piston has moved 0.030 inch (0.76 mm) from the original position.

63.12.8.1 Install microswitch (8, Figure 63-55) on inboard brake assembly half (5, Figure 63-56) using screws (9, Figure 63-55) and washers (10).

63.12.8.2 Secure with lockwire (C-405).

63.12.8.3 Install inboard brake assembly half (5, Figure 63-56) on rotor brake quill assembly (1) using bolts (2) and washers (3).

63.12.8.4 Torque bolts (2) to 80 to 100 in-lbs (9.04 to 11.30 Nm) and secure with lockwire (C-405).

63.12.8.5 Install rotor brake disc (7).

63.12.8.6 Install packings (22) in counterbored cavities in mating surfaces of inboard brake assembly half (5) and outboard brake assembly half (11).

63.12.8.7 Insert brake oil transfer tube (14) through packing (22) in inboard brake assembly half (5) until it bottoms out in hole in brake assembly half (5).

NOTE

Ensure that microswitch is adjusted so that ROTOR BRAKE light illuminates when brake piston has moved 0.030 inch (0.76 mm) from the original position.

63.12.8.8 Install microswitch (8, Figure 63-55) on outboard brake assembly half (11, Figure 63-56) using screws (9, Figure 63-55) and washers (10).

63.12.8.9 Secure with lockwire (C-405).

63.12.8.10 Place brake assembly spacer (23, Figure 63-56) over protruding oil transfer tube (14) in inboard brake assembly half (5).

63.12.8.11 Ensure holes for bolts (12) in brake assembly spacer (23) align with corresponding holes in inboard brake assembly half (5).

63.12.8.12 Install outboard brake assembly half (11) on inboard brake assembly half (5) using bolts (12) and washers (13).

• COPYRIGHT © 2007 BY DART AEROSPACE LTD. •
THIS DOCUMENT IS PRIVATE AND CONFIDENTIAL AND IS SUPPLIED ON THE EXPRESS CONDITION THAT IT IS NOT TO BE USED FOR ANY PURPOSE OR COPIED OR COMMUNICATED TO ANY OTHER PERSON WITHOUT WRITTEN PERMISSION FROM DART AEROSPACE LTD.

63.12.8.13 Torque bolts (12) to 120 to 130 in-lbs (13.56 to 14.69 Nm) and secure with lockwire (C-405).

63.12.8.14 Install hydraulic hose (2, Figure 63-55) on rotor brake assembly (1).

63.12.8.15 Bleed system.

63.12.8.16 Check proper system operation including illumination of ROTOR BRAKE light.

63.12.9 Brake Assembly - Installation (P/N 9450103-1)

MATERIALS REQUIRED

Refer to BHT-ALL-SPM for specification and source.

NUMBER	NOMENCLATURE
C-405	Lockwire

NOTE

Ensure that microswitch is adjusted so that ROTOR BRAKE light illuminates when brake piston has moved 0.030 inch (0.76 mm) from the original position.

63.12.9.1 Install microswitch (8, Figure 63-55) on inboard brake assembly half (5, Figure 63-56) using screws (9, Figure 63-55) and washers (10).

63.12.9.2 Secure with lockwire (C-405).

63.12.9.3 Install inboard brake assembly half (5, Figure 63-56) on rotor brake quill assembly (1) using bolts (2) and washers (3).

63.12.9.4 Torque bolts (2) to 80 to 100 in-lbs (9.04 to 11.30 Nm) and secure with lockwire (C-405)

63.12.9.5 Install rotor brake disc (7).

63.12.9.6 Install packings (22) in counterbored cavities in mating surfaces of inboard brake assembly half (5) and outboard brake assembly half (11).

63.12.9.7 Insert brake oil transfer tube (14) through packing (22) in inboard brake assembly half (5) until it bottoms out in hole in inboard brake assembly half (5).

NOTE

Ensure that microswitch is adjusted so that ROTOR BRAKE light illuminates when brake piston has moved 0.030 inch (0.76 mm) from the original position.

63.12.9.8 Install microswitch (8, Figure 63-55) on outboard brake assembly half (11, Figure 63-56) using screws (9, Figure 63-55) and washers (10).

63.12.9.9 Secure with lockwire (C-405).

63.12.9.10 Place brake assembly spacer (23, Figure 63-56) over protruding oil transfer tube (14) in inboard brake assembly half (5).

63.12.9.11 Ensure holes for bolts (12) in brake assembly spacer (23) align with corresponding holes in inboard brake assembly half (5).

63.12.9.12 Install outboard brake assembly half (11) on inboard brake assembly half (5) using bolts (12) and washers (13).

63.12.9.13 Torque bolts (12) to 120 to 130 in-lbs (13.56 to 14.69 Nm) and secure with lockwire (C-405)

63.12.9.14 Install hydraulic hose (2, Figure 63-55) on rotor brake assembly (1).

63.12.9.15 Bleed system.

63.12.9.16 Check for proper system operation including illumination of ROTOR BRAKE light.

63.12.10 Rotor Brake Disc - Removal

SPECIAL TOOLS REQUIRED

NUMBER	NOMENCLATURE
T101308	Jackscrew Set
T101649-101	Brake Disc Holding Tool

63.12.10.1 Open left side engine and

• COPYRIGHT © 2007 BY DART AEROSPACE LTD. •
THIS DOCUMENT IS PRIVATE AND CONFIDENTIAL AND IS SUPPLIED ON THE EXPRESS CONDITION THAT IT IS NOT TO BE USED FOR ANY PURPOSE OR COPIED OR COMMUNICATED TO ANY OTHER PERSON WITHOUT WRITTEN PERMISSION FROM DART AEROSPACE LTD.

transmission cowling to gain access to transmission.

63.12.10.2 Remove outboard brake assembly half (11, Figure 63-56).

63.12.10.3 Cut lockwire and remove retaining nut (5, Figure 63-58) using brake disc holding tool T101649-101 (3) to restrain brake disc (2).

63.12.10.4 Remove and discard packing (4).

CAUTION

ROTOR BRAKE DISC AND FLANGE ASSEMBLY SHALL BE REMOVED AS AN ASSEMBLY. DO NOT ATTEMPT TO REMOVE DISC FROM FLANGE ADAPTER WHILE ASSEMBLY IS INSTALLED ON QUILL. DO NOT SEPARATE DISC FROM FLANGE IF DISC IS NOT BEING REPLACED.

63.12.10.5 Remove disc and flange adapter (as an assembly) from quill assembly (1, Figure 63-56).

63.12.10.6 To remove rotor brake disc (2, Figure 63-58) from flange adapter (1).

63.12.11 Rotor Brake Disc - Inspection

SPECIAL TOOLS REQUIRED

NUMBER	NOMENCLATURE
AN4-5A	Bolt
AN960-416	Washer
Commercial	Dial Indicator
Commercial	Lathe

NOTE

If rotor brake disc has been removed using an arbor press (or equivalent), or warpage is suspected, the following disc inspection is required.

63.12.11.1 Install inspection arbor (Figure 63-59) in pilot hole of disc. Install four bolts (AN4-5A) and washers (AN960-416).

63.12.11.2 Install arbor and disc assembly between lathe centers.

63.12.11.3 While rotating disc, measure run-out as indicator probe is swept across full radical width of each friction surface (front and back).

63.12.11.4 Total indicator deflection shall not exceed 0.010 inch (0.254 mm).

63.12.12 Rotor Brake Disc - Installation

SPECIAL TOOLS REQUIRED

NUMBER	NOMENCLATURE
T101649-101	Brake Disc Holding Tool

MATERIALS REQUIRED

Refer to BHT-ALL-SPM for specifications.

NUMBER	NOMENCLATURE
C-405	Lockwire

63.12.12.1 If not previously accomplished, install brake disc (2, Figure 63-58) on flange adapter (1).

63.12.12.2 Apply a light coat of transmission oil (Chapter 12) to splines in rotor brake quill assembly (1, Figure 63-56) and mating splines on flange adapter (6).

63.12.12.3 Install brake disc (7) and flange adapter (6) assembly on rotor brake quill assembly (1).

63.12.12.4 Lubricate new packing (4, Figure 63-58) and install nut (5).

63.12.12.5 Install retaining nut (5) in center of brake disc (2) and flange adapter (1). Using the brake disc holding tool (T101649-101) to hold disc, tighten nut to 125 to 150 ft-lbs (169.5 to 203.4 Nm)

NOTE

Confirm torque of 50 to 70 inch-pounds (5.65 to 7.91 Nm) on bolts (6).

63.12.12.6 Secure bolts (8, Figure 63-56, View B-B) to retaining nut (10) with lockwire (C-405).

63.12.12.7 Install outboard brake assembly half (paragraph 63.12.14).

• COPYRIGHT © 2007 BY DART AEROSPACE LTD. •
THIS DOCUMENT IS PRIVATE AND CONFIDENTIAL AND IS SUPPLIED ON THE EXPRESS CONDITION THAT IT IS NOT TO BE USED FOR ANY PURPOSE OR COPIED OR COMMUNICATED TO ANY OTHER PERSON WITHOUT WRITTEN PERMISSION FROM DART AEROSPACE LTD.

63.12.13 Flange Adapter - Removal

SPECIAL TOOLS REQUIRED

NUMBER	NOMENCLATURE
T101649-101	Brake Disc Holding Tool

63.12.13.1 Cut lockwire. Using brake disc holding tool T101649-101, restrain brake disc (2, Figure 63-58) and remove bolts (6) and washers (7).

63.12.13.2 Using hand pressure only, separate flange adapter (1) from brake disc (2).

63.12.13.3 If brake disc (2) and flange adapter (1) cannot be separated by hand pressure, proceed as follows:

NOTE

The use of an arbor press, or equivalent, to separate flange adapter (1) from brake disc (2) requires brake disc to be inspected for warpage.

63.12.13.3.1 To prevent inadvertent separation of the assembly (6) and washers (7).

63.12.13.3.2 Place assembly in an arbor press. Remove bolts (6) and washers (7).

63.12.13.3.3 Apply sufficient pressure to separate flange adapter (1) from brake disc (2).

63.12.14 Flange Adapter - Installation

63.12.14.1 Install brake disc (2, Figure 63-58) on flange (1) using bolts (6) and washers (7).

63.12.14.2 Torque bolts (6) to 50 to 70 in-lbs (5.65 to 7.91 Nm) and secure with lockwire (C-405).

• COPYRIGHT © 2007 BY DART AEROSPACE LTD. •
THIS DOCUMENT IS PRIVATE AND CONFIDENTIAL AND IS SUPPLIED ON THE EXPRESS CONDITION THAT IT IS NOT TO BE USED FOR ANY PURPOSE OR COPIED OR COMMUNICATED TO ANY OTHER PERSON WITHOUT WRITTEN PERMISSION FROM DART AEROSPACE LTD.

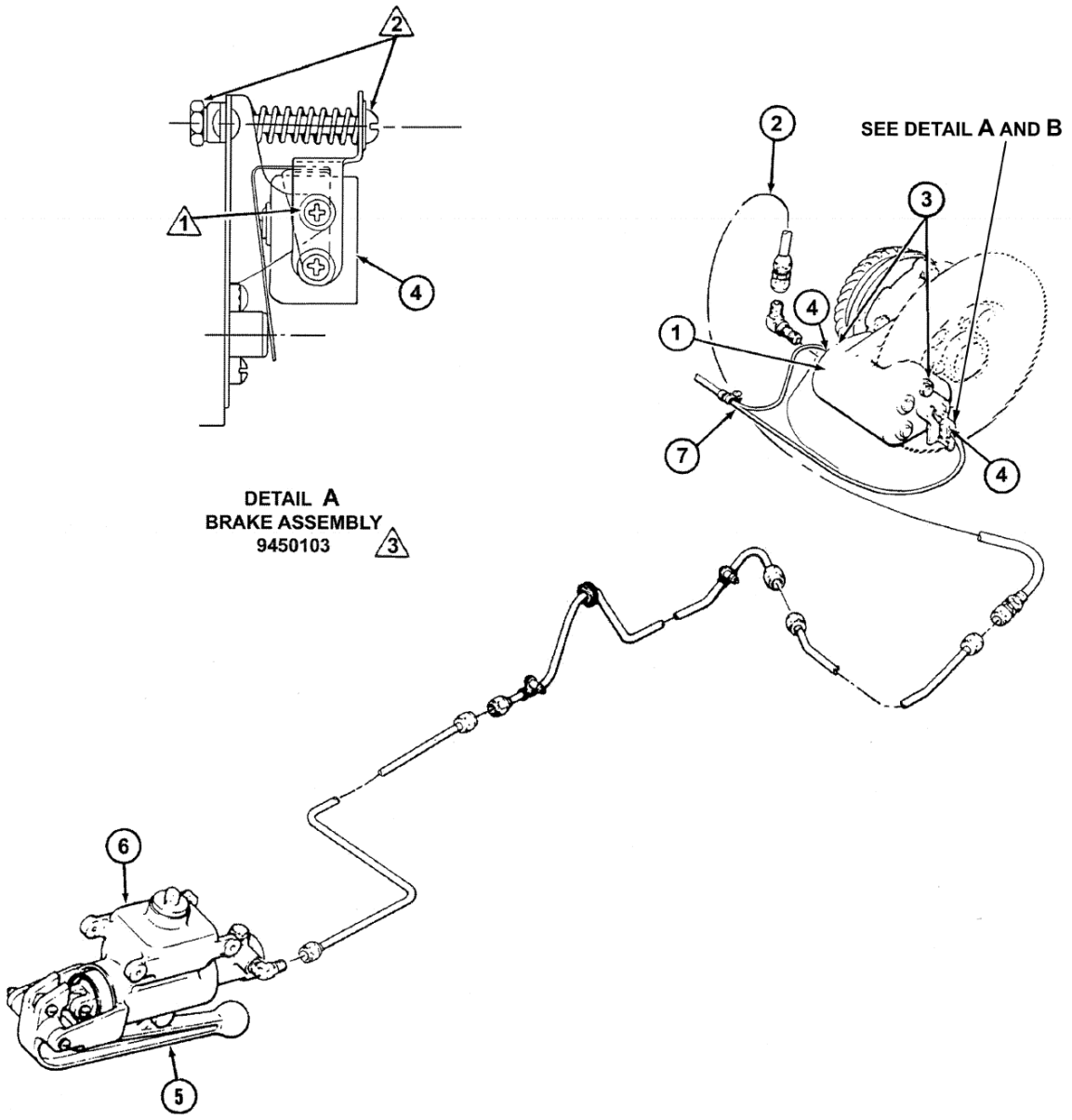

Figure 63-55. Rotor Brake Assembly (Sheet 1 of 2)

• COPYRIGHT © 2007 BY DART AEROSPACE LTD. •
THIS DOCUMENT IS PRIVATE AND CONFIDENTIAL AND IS SUPPLIED ON THE EXPRESS CONDITION THAT IT IS NOT TO BE USED FOR ANY PURPOSE OR COPIED OR COMMUNICATED TO ANY OTHER PERSON WITHOUT WRITTEN PERMISSION FROM DART AEROSPACE LTD.

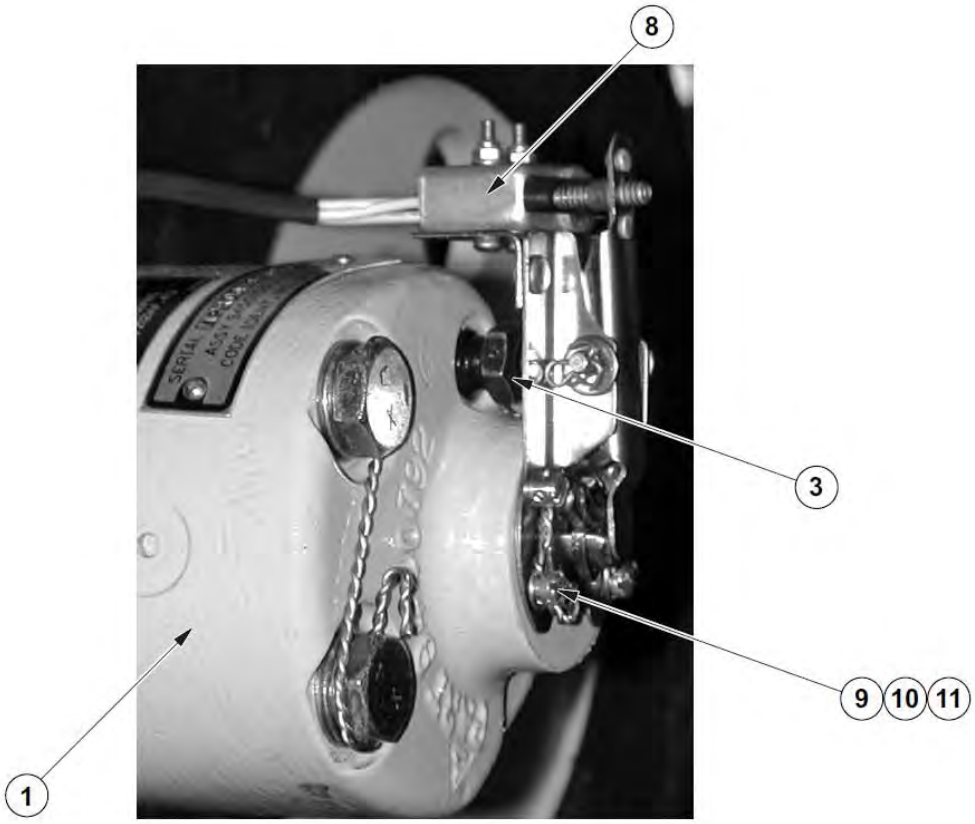

DETAIL B
BRAKE ASSEMBLY (9450103-1)

1. Rotor brake assembly
2. Hydraulic line
3. Bleed valve
4. Microswitch
5. Handle
6. Master cylinder
7. Microswitch electrical harness
8. Microswitch
9. Screws
10. Washers
11. Lockwire

NOTES

1. Loosen screw while making adjustment.
2. Loosen jam nut, turn screw to adjust switch, tighten jam nut.
3. Do not mix brake assembly 9450103-1 and 9450103 in any installation.

Figure 63-55. Rotor Brake Assembly (Sheet 2 of 2)

• COPYRIGHT © 2007 BY DART AEROSPACE LTD. •
THIS DOCUMENT IS PRIVATE AND CONFIDENTIAL AND IS SUPPLIED ON THE EXPRESS CONDITION THAT IT IS NOT TO BE USED FOR ANY PURPOSE OR COPIED OR COMMUNICATED TO ANY OTHER PERSON WITHOUT WRITTEN PERMISSION FROM DART AEROSPACE LTD.

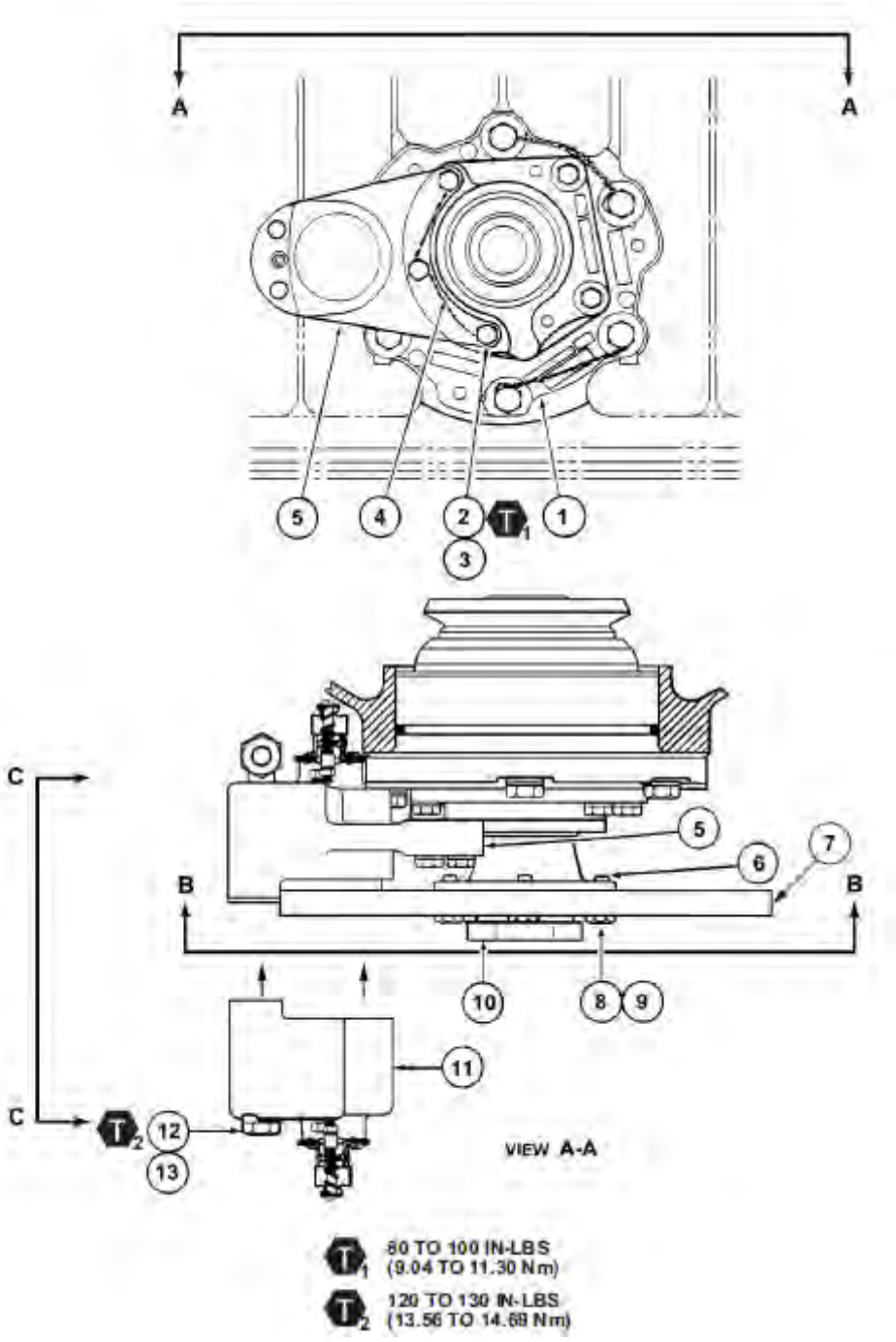

Figure 63-56. Rotor Brake Assembly (Sheet 1 of 3)

• COPYRIGHT © 2007 BY DART AEROSPACE LTD. •
THIS DOCUMENT IS PRIVATE AND CONFIDENTIAL AND IS SUPPLIED ON THE EXPRESS CONDITION THAT IT IS NOT TO BE USED FOR ANY PURPOSE OR COPIED OR COMMUNICATED TO ANY OTHER PERSON WITHOUT WRITTEN PERMISSION FROM DART AEROSPACE LTD.

1. Quill assembly
2. Bolt
3. Washer
4. Lockwire
5. Inboard brake assembly half
6. Flange adapter
7. Brake disc
8. Bolt
9. Washer
10. Retaining nut
11. Outboard brake assembly half
12. Bolt
13. Washer
14. Oil transfer tube
15. Lockwire
16. Brake lining
17. Cotter pin
18. Return spring
19. Piston return pin
20. Packing
21. Piston
22. Packing
23. Spacer
24. Piston cavity

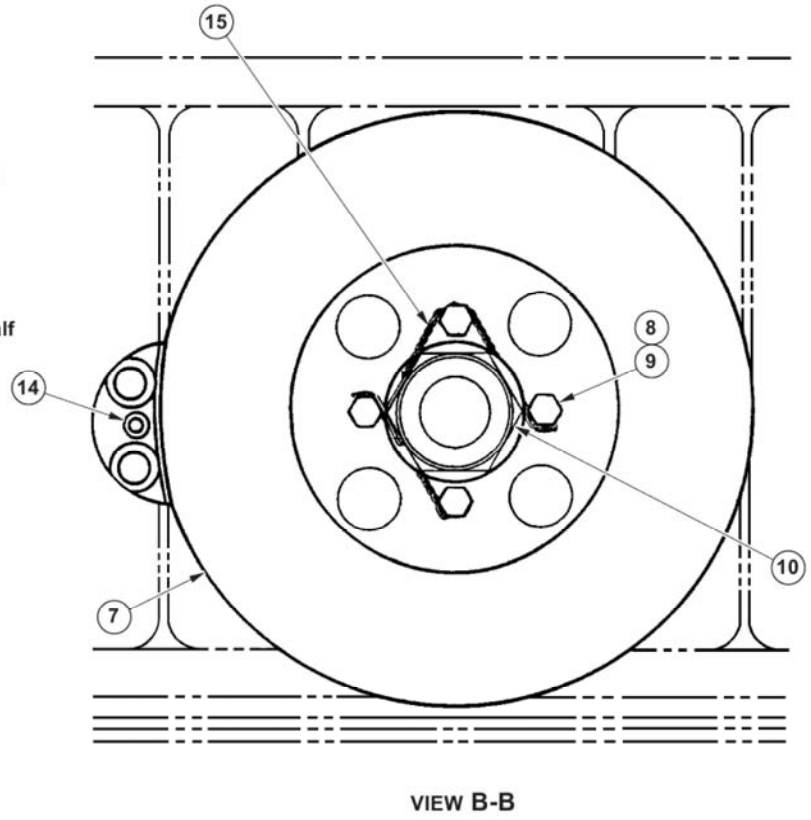

VIEW B-B

Figure 63-56. Rotor Brake Assembly (Sheet 2 of 3)

• COPYRIGHT © 2007 BY DART AEROSPACE LTD. •
THIS DOCUMENT IS PRIVATE AND CONFIDENTIAL AND IS SUPPLIED ON THE EXPRESS CONDITION THAT IT IS NOT TO BE USED FOR ANY PURPOSE OR COPIED OR COMMUNICATED TO ANY OTHER PERSON WITHOUT WRITTEN PERMISSION FROM DART AEROSPACE LTD.

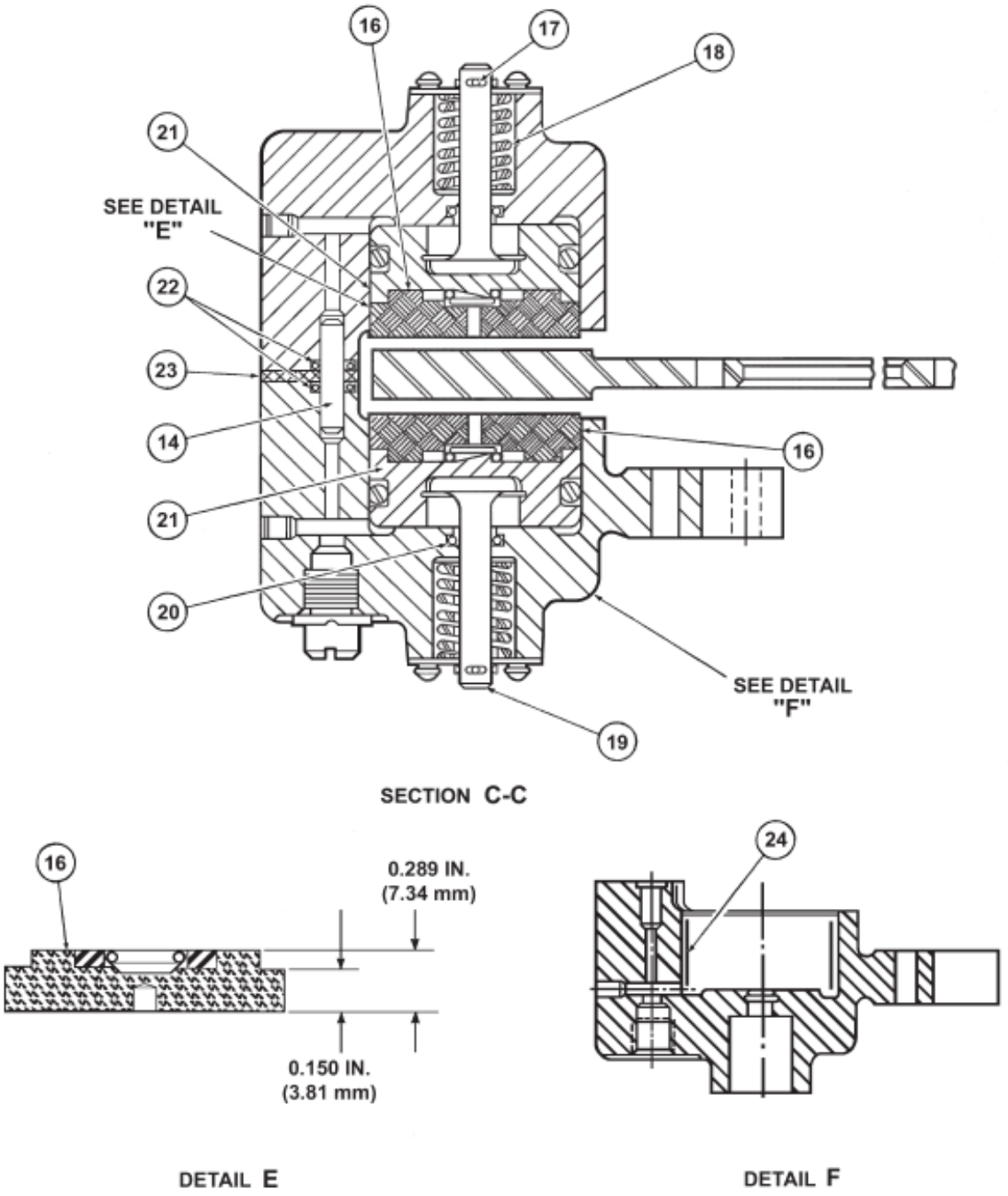

Figure 63-56. Rotor Brake Assembly (Sheet 3 of 3)

• COPYRIGHT © 2007 BY DART AEROSPACE LTD. •
THIS DOCUMENT IS PRIVATE AND CONFIDENTIAL AND IS SUPPLIED ON THE EXPRESS CONDITION THAT IT IS NOT TO BE USED FOR ANY PURPOSE OR COPIED OR COMMUNICATED TO ANY OTHER PERSON WITHOUT WRITTEN PERMISSION FROM DART AEROSPACE LTD.

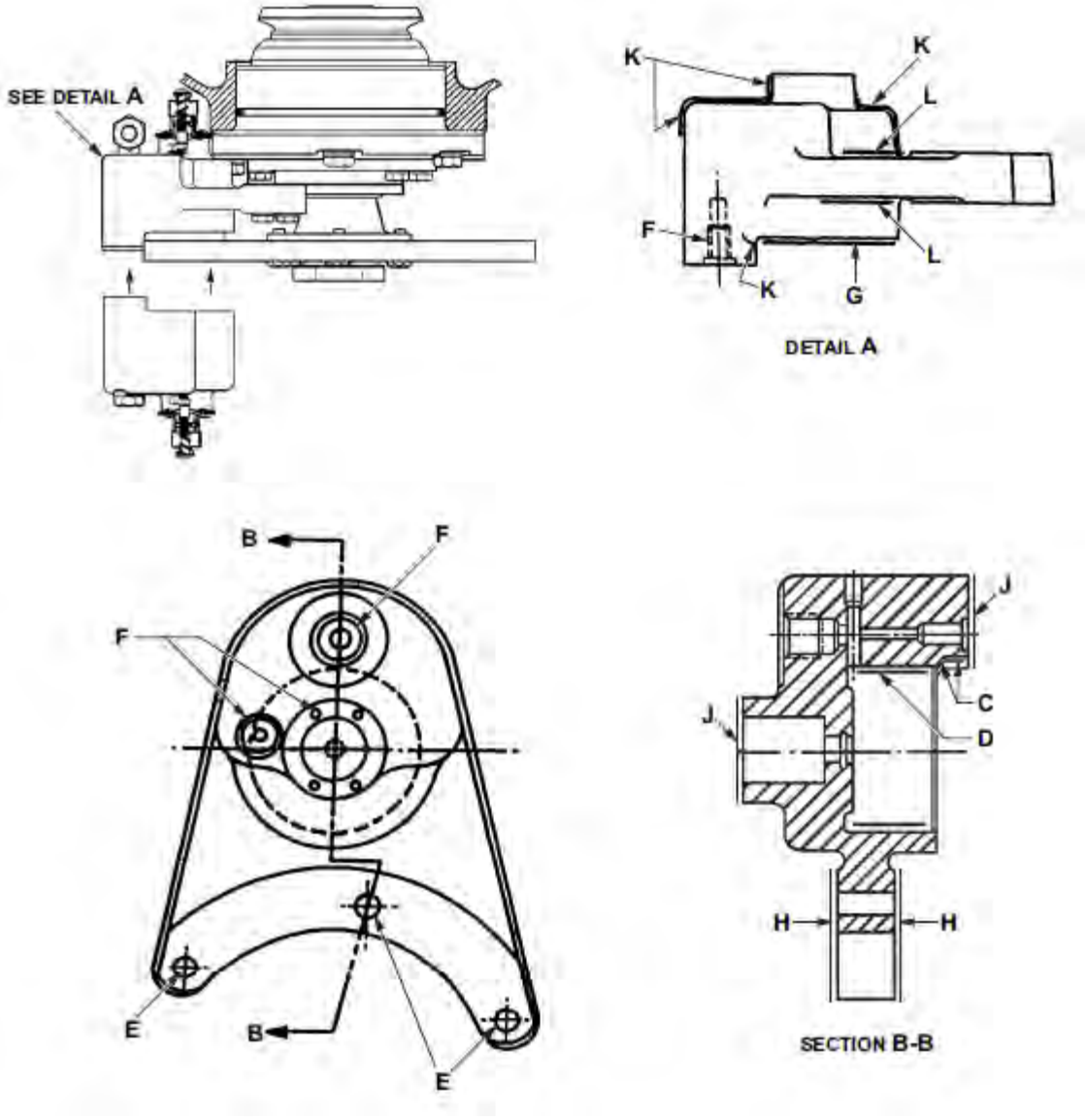

Figure 63-57. Rotor Brake Assembly - Damage Limits (Sheet 1 of 2)

• COPYRIGHT © 2007 BY DART AEROSPACE LTD. •
THIS DOCUMENT IS PRIVATE AND CONFIDENTIAL AND IS SUPPLIED ON THE EXPRESS CONDITION THAT IT IS NOT TO BE USED FOR ANY PURPOSE OR COPIED OR COMMUNICATED TO ANY OTHER PERSON WITHOUT WRITTEN PERMISSION FROM DART AEROSPACE LTD.

NO.	REF LTR	CHARACTERISTIC	INSPECTION METHOD	LIMIT
1.	C	Wear	Measure	0.015 inch (0.38 mm) deep 1.0 inch (25.4 mm) long maximum two places. (2)
2.	D	Mechanical/ corrosion damage	Visual/ measure	0.002 inch (0.051 mm) deep in piston cavity area, provided sealing qualities are maintained. Surface finish should be 15/30 microinches RHR. (2)
3.	E	Wear	Visual/ measure	0.015 inch (0.38 mm) maximum oversize on hole diameter. Round off sharp edges (for P/N 9421067 and 9431108).
4.	F	Thread	Visual	Remove housing from service if threads are stripped or badly damaged.
5.	G	Wear	Measure	0.030 inch (0.76 mm) deep, maximum on piston boss face.
6.	H	Wear	Measure	0.030 inch (0.76 mm) deep, maximum on mounting flange face. (2) 0.010 inch (0.25 mm) deep, maximum on flange face area covered by mounting bolt washers (for P/N 9421067 and 9431108).
7.	J	Wear	Measure	0.010 inch (0.25 mm) deep, maximum on return spring boss face and housing interface surface. (2)
8.	K	Wear	Measure	0.030 inch (0.76 mm) deep, maximum on housing exterior.
9.	L	Wear	Visual/ measure	0.030 inch (0.76 mm) deep, maximum on housing mounting flange; blend on both surfaces is permitted as long as they are not directly opposite each other (for P/N 9421067 and 9431108).

NOTES

1. Inboard brake assembly half shown, outboard identical.
2. Since removal of material in areas C, D, H, and J can shorten the life of the part, it is recommended that if removal of metal in these areas is necessary, it be kept to a minimum.
3. Scratches and/or pits in the areas designated, may be blended or polished out within the dimensional limits shown.

Figure 63-57. Rotor Brake Assembly - Damage Limits (Sheet 2 of 2)

• COPYRIGHT © 2007 BY DART AEROSPACE LTD. •
THIS DOCUMENT IS PRIVATE AND CONFIDENTIAL AND IS SUPPLIED ON THE EXPRESS CONDITION THAT IT IS NOT TO BE USED FOR ANY PURPOSE OR COPIED OR COMMUNICATED TO ANY OTHER PERSON WITHOUT WRITTEN PERMISSION FROM DART AEROSPACE LTD.

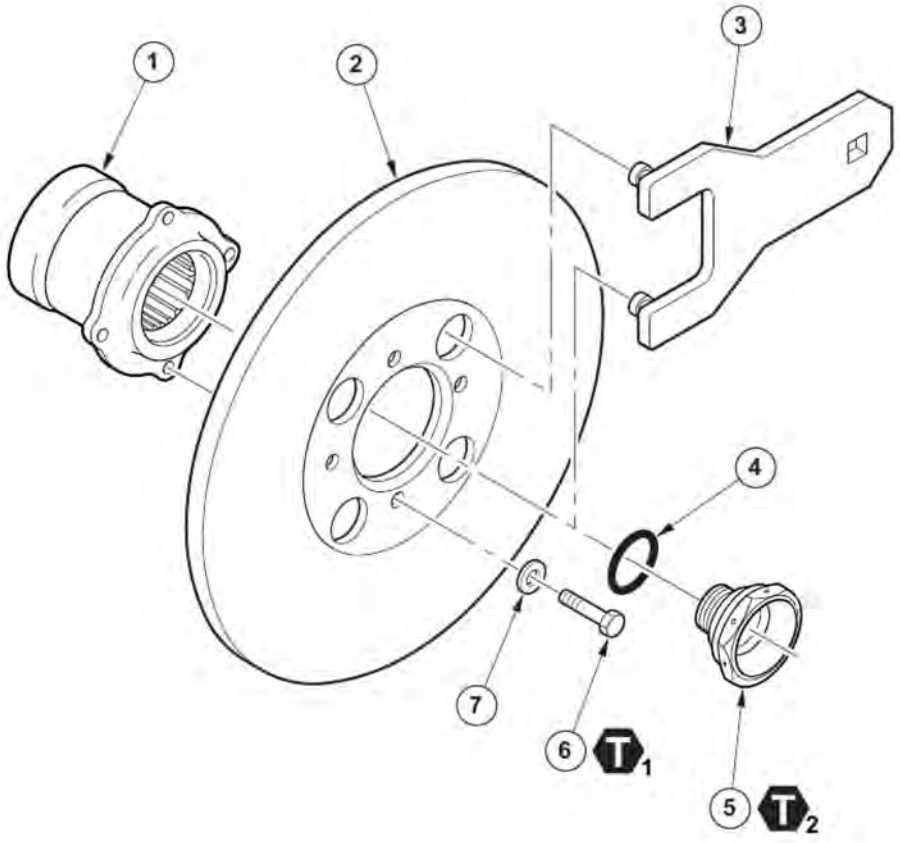

1. Flange adapter
2. Brake disc
3. Brake disc holding tool (T101649-101)
4. Packing
5. Retaining nut
6. Bolt
7. Washer

T1 50 TO 70 IN-LBS (5.65 TO 7.91 Nm)

T2 125 TO 150 FT-LBS (169.5 TO 203.4 Nm)

Figure 63-58. Rotor Brake Disc

• COPYRIGHT © 2007 BY DART AEROSPACE LTD. •
THIS DOCUMENT IS PRIVATE AND CONFIDENTIAL AND IS SUPPLIED ON THE EXPRESS CONDITION THAT IT IS NOT TO BE USED FOR ANY PURPOSE OR COPIED OR COMMUNICATED TO ANY OTHER PERSON WITHOUT WRITTEN PERMISSION FROM DART AEROSPACE LTD.

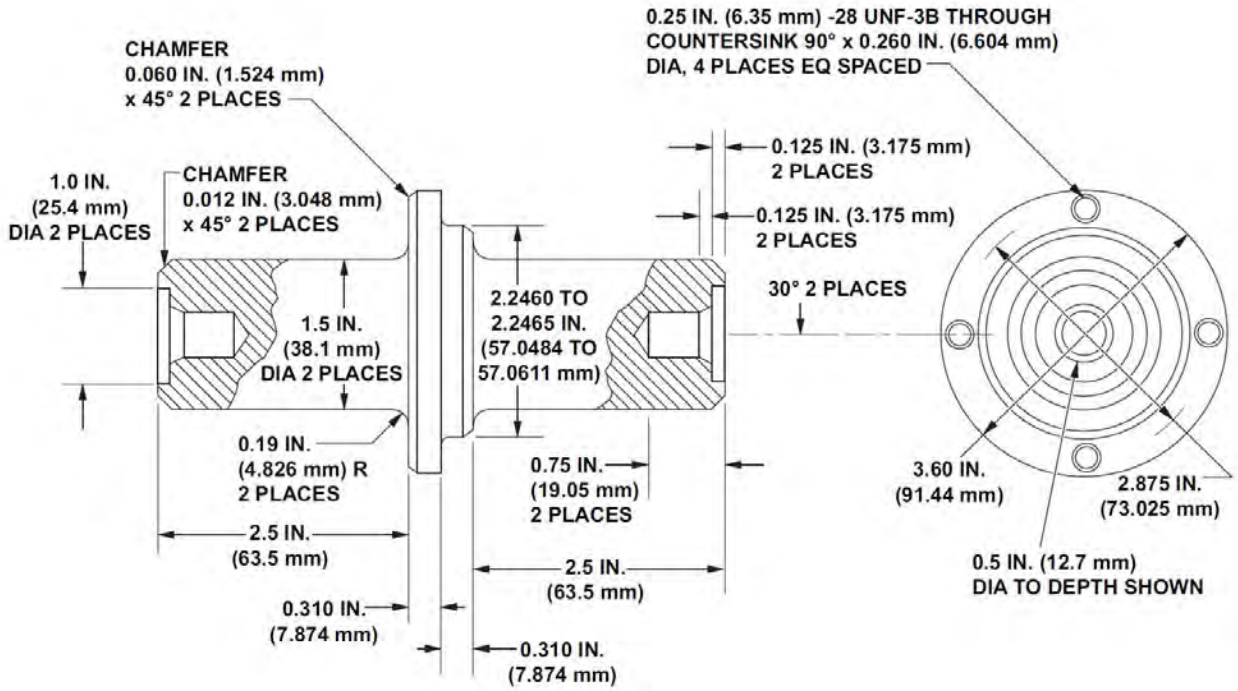

NOTES

1. Material: AISI 4340 steel per MIL-S-5000. Heat treat to RC 36-40 in accordance with MIL-H-6875.
2. Surface finish 125 micro-inches unless otherwise noted.
3. Break edges 0.015 in. (0.381 mm) radius or 0.015 in. (0.381 mm) x 40 to 50° chamfer unless otherwise noted.

Figure 63-59. Rotor Brake Disc Inspection Arbor

• COPYRIGHT © 2007 BY DART AEROSPACE LTD. •
THIS DOCUMENT IS PRIVATE AND CONFIDENTIAL AND IS SUPPLIED ON THE EXPRESS CONDITION THAT IT IS NOT TO BE USED FOR ANY PURPOSE OR COPIED OR COMMUNICATED TO ANY OTHER PERSON WITHOUT WRITTEN PERMISSION FROM DART AEROSPACE LTD.

CHAPTER 64
TAIL ROTOR
(64-00-00)

REFER TO
BHT-212-MM

• COPYRIGHT © 2007 BY DART AEROSPACE LTD. •
THIS DOCUMENT IS PRIVATE AND CONFIDENTIAL AND IS SUPPLIED ON THE EXPRESS CONDITION THAT IT IS NOT TO BE USED FOR ANY PURPOSE OR COPIED OR COMMUNICATED TO ANY OTHER PERSON WITHOUT WRITTEN PERMISSION FROM DART AEROSPACE LTD.

CHAPTER 65
TAIL ROTOR DRIVE SYSTEM
(65-00-00)

REFER TO
BHT-212-MM

• COPYRIGHT © 2007 BY DART AEROSPACE LTD. •
THIS DOCUMENT IS PRIVATE AND CONFIDENTIAL AND IS SUPPLIED ON THE EXPRESS CONDITION THAT IT IS NOT TO BE USED FOR ANY PURPOSE OR COPIED OR COMMUNICATED TO ANY OTHER PERSON WITHOUT WRITTEN PERMISSION FROM DART AEROSPACE LTD.

CHAPTER 67
FLIGHT CONTROLS
(67-00-00)

• COPYRIGHT © 2007 BY DART AEROSPACE LTD. •
THIS DOCUMENT IS PRIVATE AND CONFIDENTIAL AND IS SUPPLIED ON THE EXPRESS CONDITION THAT IT IS NOT TO BE USED FOR ANY PURPOSE OR COPIED OR COMMUNICATED TO ANY OTHER PERSON WITHOUT WRITTEN PERMISSION FROM DART AEROSPACE LTD.

TABLE OF CONTENTS

LIST OF FIGURES 3
67.1 Flight Controls 4
67.1.1 Introduction 4
67.1.2 Troubleshooting 4
67.1.3 Flight Control Rigging 4
67.1.4 General Rigging Instructions 4
67.1.5 Collective Controls 5
67.1.6 Cyclic Controls (Helicopters Prior to s/n 30850) 7
67.1.7 Cyclic Controls (Helicopter s/n 30850 and subsequent). 11
67.1.8 Anti-Torque Controls (Helicopters Prior to s/n 31175) 14
67.1.9 Anti-Torque Controls (212-011-701 Hub and Blade) (Helicopter s/n 31175 and Sub.) 17
67.1.10 Synchronized Elevator Controls 20
67.2 Collective Flight Controls 23
67.2.1 Collective Controls 23
67.2.2 Collective Control Stick and Jackshaft 23
67.2.3 Collective Friction Clamp 26
67.2.4 Minimum Collective Friction Adjustment 28
67.2.5 Throttle Control Gears Adjustment 28
67.2.6 Miscellaneous Control Components 29
67.3 Cyclic Flight Controls 35
67.3.1 Cyclic Controls 35
67.3.2 Cyclic Control Stick 35
67.3.3 Force Trim 35
67.3.4 Cyclic Control Force Gradient 36
67.3.5 Magnetic Brake 36
67.3.6 Miscellaneous Control Components 37
67.3.7 Cyclic Jackshaft 39
67.4 Anti-Torque Control 45
67.4.1 Anti-Torque Control System 45
67.4.2 Anti-Torque Controls 45
67.4.3 Minimum Friction Adjustment 45
67.4.4 Pedals and Adjuster 45
67.4.5 Force Trim 46
67.4.6 Force Gradient 46
67.4.7 Magnetic Brake 47
67.4.8 Miscellaneous Control Components 47
67.5 Synchronized Elevator 50
67.5.1 Synchronized Elevator 50
67.5.2 Maintenance 50

• COPYRIGHT © 2007 BY DART AEROSPACE LTD. •
THIS DOCUMENT IS PRIVATE AND CONFIDENTIAL AND IS SUPPLIED ON THE EXPRESS CONDITION THAT IT IS NOT TO BE USED FOR ANY PURPOSE OR COPIED OR COMMUNICATED TO ANY OTHER PERSON WITHOUT WRITTEN PERMISSION FROM DART AEROSPACE LTD.

LIST OF FIGURES

Figure 67-1. Collective Controls 6
Figure 67-2. Collective Bellcrank 7
Figure 67-3. Cyclic Controls (Sheet 1 of 2) 9
Figure 67-3. Cyclic Controls (Sheet 2 of 2) 10
Figure 67-4. Swashplate Pre-tilt Settings 13
Figure 67-5. Anti-Torque Controls (Sheet 1 of 2 16
Figure 67-5. Anti-Torque Controls (Sheet 2 of 2) 17
Figure 67-6. Anti-Torque Rigging (212-011-701 Hub and Blade) (Helicopter s/n 31175 and Subsequent) 19
Figure 67-7. Tail Rotor Blade to Yoke Clearance 19
Figure 67-8. Synchronized Elevator Controls Rigging 22
Figure 67-9. Collective Stick and Jackshaft 31
Figure 67-10. Collective Stick and Jackshaft Installation 32
Figure 67-11. Friction Clamp Assembly 33
Figure 67-12. Throttle Control Gear Sectors Shimming and Backlash 34
Figure 67-13. Cyclic Control Stick 41
Figure 67-14. Force Gradient 42
Figure 67-15. Cyclic Control Mixing Lever Assembly 43
Figure 67-16. Cyclic Jackshaft 44
Figure 67-17. Anti-Torque Control Pivot Bolts 49
Figure 67-18. Synchronized Elevator 53
Figure 67-19. Elevator Spar Damage 54
Figure 67-20. Elevator Horn Hole Location 55

• COPYRIGHT © 2007 BY DART AEROSPACE LTD. •
THIS DOCUMENT IS PRIVATE AND CONFIDENTIAL AND IS SUPPLIED ON THE EXPRESS CONDITION THAT IT IS NOT TO BE USED FOR ANY PURPOSE OR COPIED OR COMMUNICATED TO ANY OTHER PERSON WITHOUT WRITTEN PERMISSION FROM DART AEROSPACE LTD.

67.1 FLIGHT CONTROLS

67.1.1 Introduction

This chapter contains instructions for maintenance of the flight control systems. Mechanical linkage systems, actuated by conventional helicopter controls, are used to control flight attitude and direction. Systems include a cyclic control stick for fore, aft, and lateral control; a collective pitch control stick for vertical control: and anti-torque pedals for directional control. A synchronized elevator is linked into cyclic fore-and-aft control system.
Electrically operated force trims, connected to cyclic and anti-torque controls, induce artificial control feel and stabilize the control stick and pedals to prevent movement from feedback forces.

67.1.2 Troubleshooting

Refer to Chapter 29 for flight control troubleshooting.

67.1.3 Flight Control Rigging

The following paragraphs provide rigging instructions for the collective, cyclic, anti-torque (tail rotor), and synchronized elevator controls.

67.1.4 General Rigging Instructions

MATERIALS REQUIRED

NUMBER	NOMENCLATURE
C-104	Corrosion Preventive Compound

The following general procedures shall be followed when rigging any control system unless detailed instructions direct otherwise:

67.1.4.1 Perform all checks and rigging with hydraulic boost off and hydraulic systems properly bled (Chapter 29).

67.1.4.2 After adjustment, control tubes shall be free to rotate several degrees about the longitudinal axis.

67.4.1.3 After adjustment, control tubes jamnuts shall be torqued to 80 to 100 in-Lbs. (9.04 to 11.29 Nm) unless otherwise specified.

67.4.1.4 Prior to beginning rigging, ensure all control tubes and links within that system are installed and all rigging points are disconnected.

67.4.1.5 Tolerance for rigging dimensions is ±0.03 in. (0.76 mm) except as noted.

67.4.1.6 Apply corrosion preventive compound (C-104) to threads of all adjustable rod end bearings and devises.

67.4.1.7 Pilot cyclic or collective may be held either by hand or with friction adjustment when a rigging procedure requires either be maintained in a specific position.

67.4.1.8 All adjustable control tubes shall have a minimum of one complete thread exposed after final adjustment. Thread engagement shall be sufficient to cover inspection hole when so equipped.

• COPYRIGHT © 2007 BY DART AEROSPACE LTD. •
THIS DOCUMENT IS PRIVATE AND CONFIDENTIAL AND IS SUPPLIED ON THE EXPRESS CONDITION THAT IT IS NOT TO BE USED FOR ANY PURPOSE OR COPIED OR COMMUNICATED TO ANY OTHER PERSON WITHOUT WRITTEN PERMISSION FROM DART AEROSPACE LTD.

CHAPTER 67 – FLIGHT CONTROLS (67-00-00)

67.1.5 Collective Controls

MATERIALS REQUIRED

NUMBER	NOMENCLATURE
C-308	Adhesive
C-405	Lockwire

NOTE

Refer to paragraph 67.1.4 prior to beginning rigging.

67.1.5.1 Disconnect collective pitch controls at rigging points as follows:

67.1.5.1.1 Control tube (2, Figure 67-1) from collective levers (1).

67.1.5.1.2 Control tube (6) and spring (19), from actuator lever (18).

67.1.5.2 Place collective control stick full up against stop. Tighten friction adjustment to hold in position.

67.1.5.3 For helicopters S/N 30850 and sub. or prior S/N helicopters with adjustable control tube 212-001-270-001 installed, disconnect control tube (3, Figure 67-2) at forward end and position bellcrank (2) to dimension shown. Adjust control tube (3) to fit and install on lever (10, Figure 67-1).

67.1.5.4 With collective controls positioned per step 67.1.5.2 (step 67.1.5.3 for helicopter S/N 30850 and sub. or prior S/N helicopters with adjustable control tube 212-001-270-001 installed), move actuator lever (18) enough to release hydraulic lock of cylinder and move (or bottom) hydraulic cylinder in up position. Set valve actuator lever in position shown in detail B.

67.1.5.5 Adjust control tube (6) to correct length to attach to actuator lever (18), then shorten 3 to 5 turns at end fitting. Attach to lever with bolt, using clip under bolt head and washer under nut. Attach spring (19) before tightening nut. Install cotter pin.

NOTE

Maximum exposed thread dimension on control tube (6) is 1 .0 in. (25.4 mm) (detail B).

CAUTION

COLLECTIVE CONTROL LINKAGE BELOW SERVO ACTUATOR SHALL NOT MOVE WHILE PERFORMING STEP 67.1.5.6.

67.1.5.6 Place collective control stick full down against stop. Tighten friction adjustment to hold in position. Position collective lever (1) 2.39 to 2.45 in. (60.71 to 62.23 mm) from center of lever cam roller bolt to top surface of mast bearing plate (detail A). Center actuator lever (18) and adjust length of control tube (2) to fit. Connect control tube (2) to collective lever (1). Install washers on bolt, install bolt, washer, and nut. Torque nut, install cotter pin. Torque nut (23) on clevis (22) 1500 to 1800 in-lbs. (169.47 to 203.36 Nm). Apply lockwire (C-405) to lock (21, detail D). Apply adhesive (C-308) evenly around nut, lock, and threads on clevis.

NOTE

If rigging system with hydraulic system not completely bled of air, apply sufficient downward pressure on control tube (2) to hold actuator lever (18) at top of travel. Adjust clevis on control tube (2) to fit collective lever (1) then shorten one full turn of clevis and connect as described in step 67.1.5.6.

67.1.5.7 Establish main rotor low blade angle of 8° (Chapter 62).

67.1.5.8 Check minimum friction adjustment on collective control stick (paragraph 67.2.4).

67.1.5.9 Inspect collective pitch control system for secure installation and unobstructed full travel.

• COPYRIGHT © 2007 BY DART AEROSPACE LTD. •
THIS DOCUMENT IS PRIVATE AND CONFIDENTIAL AND IS SUPPLIED ON THE EXPRESS CONDITION THAT IT IS NOT TO BE USED FOR ANY PURPOSE OR COPIED OR COMMUNICATED TO ANY OTHER PERSON WITHOUT WRITTEN PERMISSION FROM DART AEROSPACE LTD.

1. Collective lever
2. Control tube
3. Universal
4. Support
5. Cylinder
6. Control tube
7. Support
8. Bellcrank (D212-725-1-901)
9. Control tube
10. Lever
11. Control tube
12. Clamp
13. Bearing housing
14. Control arm
15. Jackshaft tube
16. Boot
17. Pilot collective stick
18. Actuator lever
19. Spring
20. Support
21. Lock
22. Clevis
23. Nut

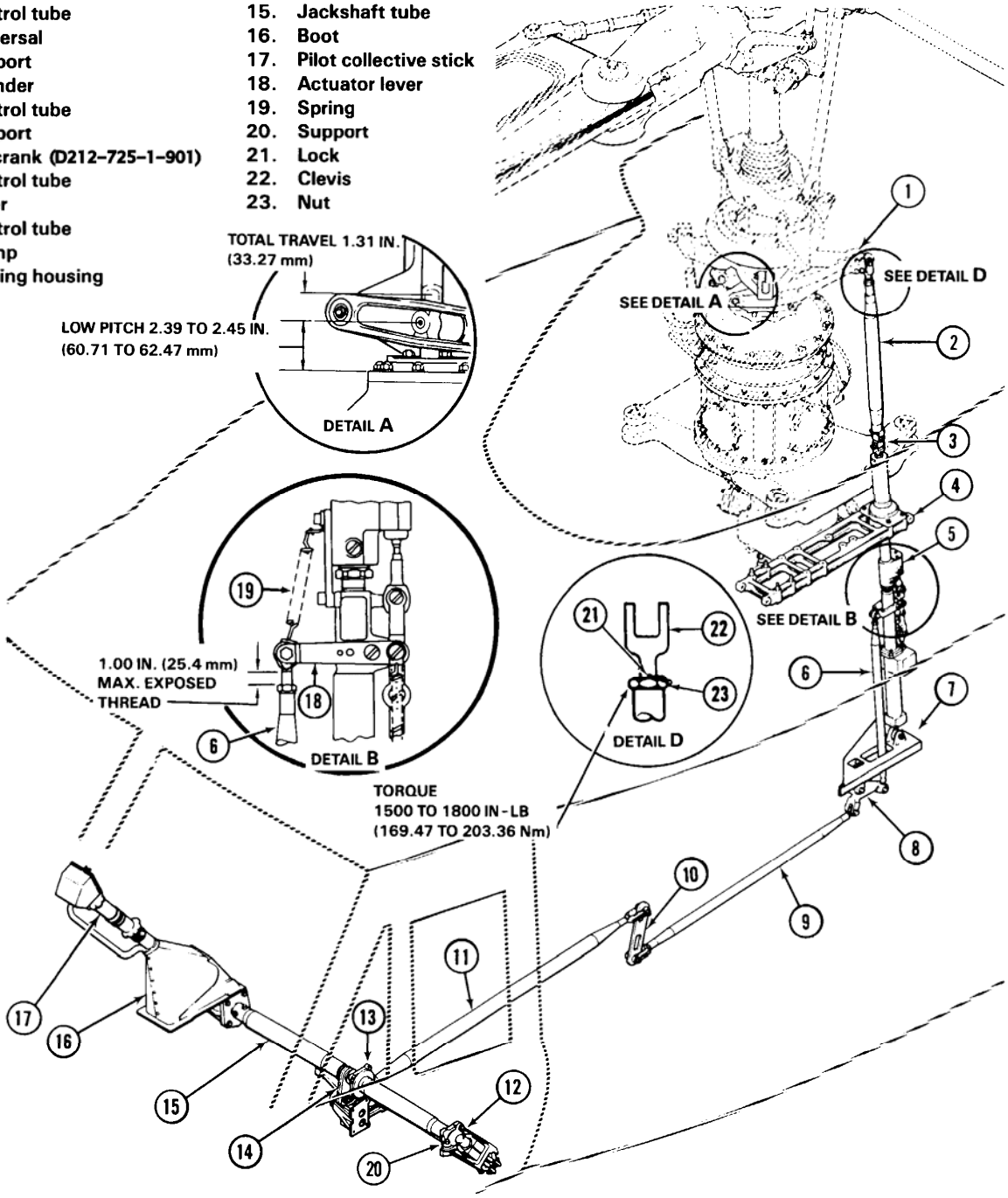

Figure 67-1. Collective Controls

• COPYRIGHT © 2007 BY DART AEROSPACE LTD. •
THIS DOCUMENT IS PRIVATE AND CONFIDENTIAL AND IS SUPPLIED ON THE EXPRESS CONDITION THAT IT IS NOT TO BE USED FOR ANY PURPOSE OR COPIED OR COMMUNICATED TO ANY OTHER PERSON WITHOUT WRITTEN PERMISSION FROM DART AEROSPACE LTD.

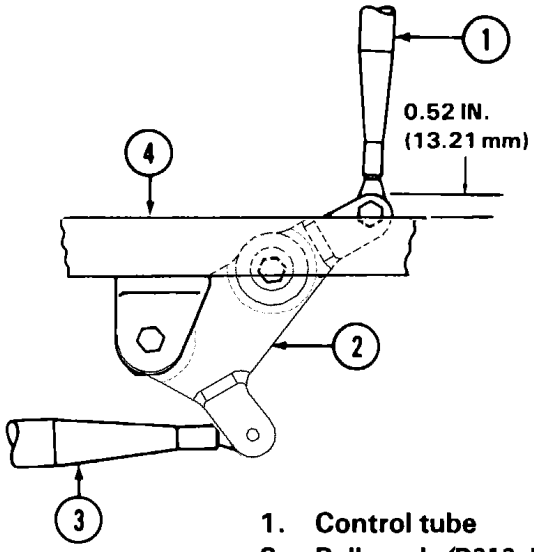

1. **Control tube**
2. **Bellcrank (D212-725-1-901)**
3. **Control tube**
4. **Support**

Figure 67-2. Collective Bellcrank

67.1.6 Cyclic Controls (Helicopters Prior to s/n 30850)

MATERIALS REQUIRED

NUMBER	NOMENCLATURE
C-308	Adhesive
C-405	Lockwire

SPECIAL TOOLS REQUIRED

NUMBER	NOMENCLATURE
T101330	Cyclic stick fixture

NOTE
Refer to paragraph 67.1.4 prior to beginning rigging.

67.1.6.1 Disconnect extension tubes (3 and 10, Figure 67-3) and spring (2) from swashplate horns, and control tubes (9) from valve arm (30) of hydraulic cylinders (7 and 14).

NOTE
For rigging procedures if dual control kits is installed, refer to appropriate Service Instruction.

67.1.6.2 Hold pilot cyclic stick in extreme aft left corner position so upper arm of bellcrank (8) is in upper-most position. Bottom out piston at top of right side hydraulic cylinder (7) and position valve arm (30) to top of travel. Adjust control tube (9) to correct length to attach to valve arm (30). Shorten control tube by three turns and connect to input lever with bolt, washer, nut, and cotter pin.

67.1.6.3 Hold pilot cyclic stick in extreme aft right corner so upper arm of bellcrank (15) is in uppermost position. Bottom out piston at top of left hydraulic cylinder (14) and position valve arm (30) to top of travel. Adjust control tube (9) to correct length to attach to valve arm (30). Shorten control tube by three turns and connect to input lever with bolt, washer, nut and cotter pin.

• COPYRIGHT © 2007 BY DART AEROSPACE LTD. •
THIS DOCUMENT IS PRIVATE AND CONFIDENTIAL AND IS SUPPLIED ON THE EXPRESS CONDITION THAT IT IS NOT TO BE USED FOR ANY PURPOSE OR COPIED OR COMMUNICATED TO ANY OTHER PERSON WITHOUT WRITTEN PERMISSION FROM DART AEROSPACE LTD.

67.1.6.4 Position pilot cyclic stick perpendicular to deck within 1/2 degree.

NOTE

Alternate procedure for centering cyclic stick with copilot cyclic stick installed: Install T101330 cyclic stick fixture on copilot cyclic stick.

67.1.6.5 Set swashplate within dimensions of Figure 67-4.

NOTE

If rigging system with hydraulic cylinder not completely bled of air, bottom valve arm (30, Figure 67-3) at top of travel. Adjust extension tubes (3 and 10) to fit swashplate; shorten one full turn and attach as described in step 67.1.6.6.

67.1.6.6 Position valve arm (30) to center.

67.1.6.7 Adjust each extension tube (3 and 10) to correct length and attach to swashplate with bolt, washer, nut and cotter pin. Torque jamnuts on control tubes 1500 to 1800 in.lbs. (169.47 to 203.36 Nm) and secure with lockwire (C-405) (Figure 67-1, detail D).

67.1.6.8 Apply adhesive (C-308) around nut, lock, and threads on clevis.

67.1.6.9 Hold arm of lateral magnetic brake (20, Figure 67-3) in center of travel. Adjust link of force gradient (21) to align on bellcrank (23). Install bolt, washers (under head), and nut; secure with cotter pin. Tighten nut against link.

67.1.6.10 Loosen cyclic stick friction (or remove rigging fixture, if installed).

67.1.6.11 Check clearance between lateral force gradient and structure at extreme positions of brake arm. If required for clearance, brake arm may be moved one serration on shaft.

67.1.6.12 Hold cyclic stick against forward stop. Hold arm of fore-aft magnetic brake (17) full aft.

67.1.6.13 Adjust clevis of force gradient (18) to fit on cyclic lever of jackshaft (26) plus two turns, for approximately 0.30 in. (7.62 mm) cushion at forward cyclic stop. Install bolt and washer. Secure bolt head with lockwire (C-405).

67.1.6.14 Connect spring (2) to bracket on right forward horn of swashplate.

67.1.6.15 Check complete system for secure installation and unobstructed full travel.

NOTE

Adjust swashplate lateral pre-tilt, within dimension of Figure 67-4, for satisfactory flight.

• COPYRIGHT © 2007 BY DART AEROSPACE LTD. •
THIS DOCUMENT IS PRIVATE AND CONFIDENTIAL AND IS SUPPLIED ON THE EXPRESS CONDITION THAT IT IS NOT TO BE USED FOR ANY PURPOSE OR COPIED OR COMMUNICATED TO ANY OTHER PERSON WITHOUT WRITTEN PERMISSION FROM DART AEROSPACE LTD.

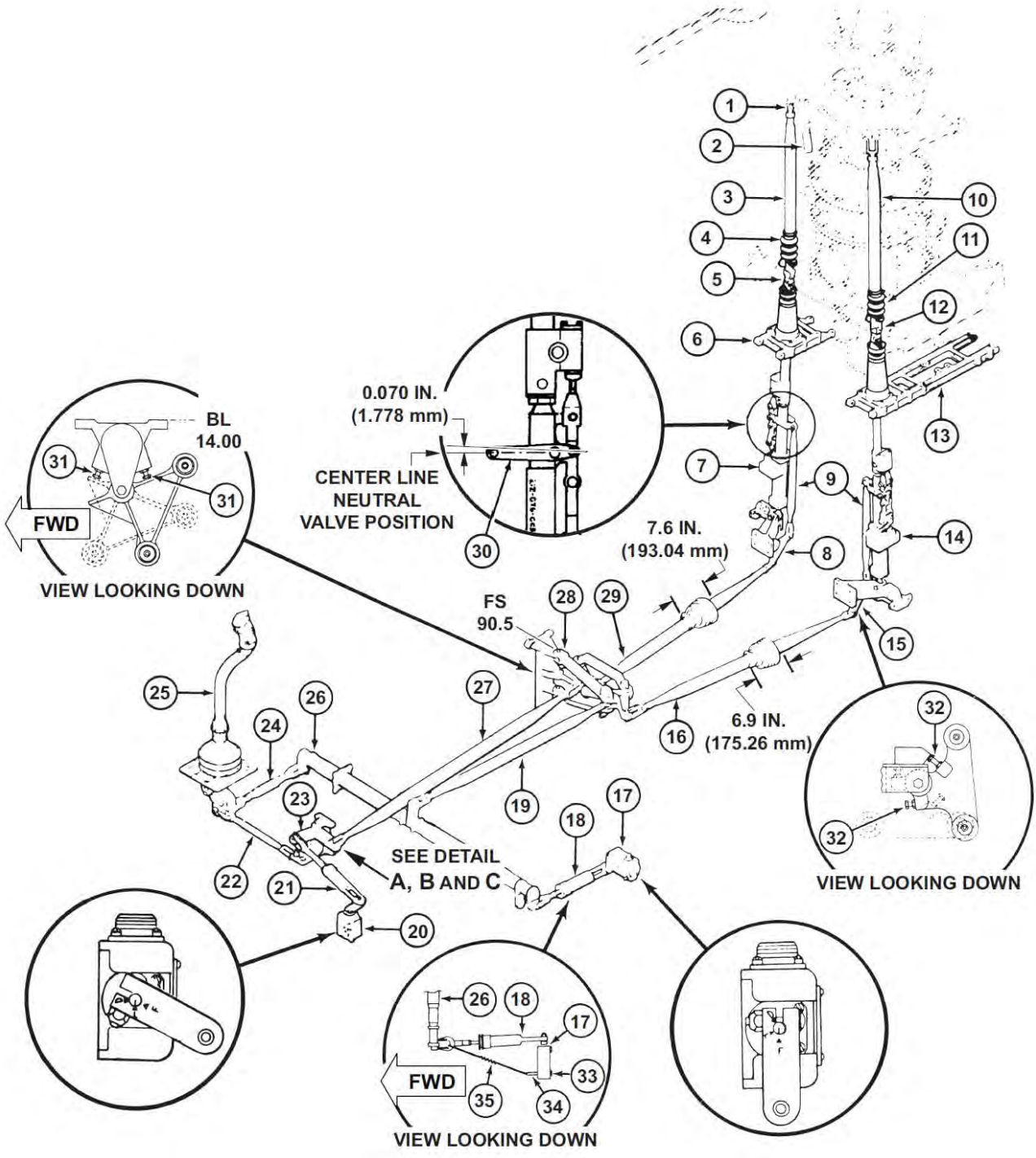

Figure 67-3. Cyclic Controls (Sheet 1 of 2)

• COPYRIGHT © 2007 BY DART AEROSPACE LTD. •
THIS DOCUMENT IS PRIVATE AND CONFIDENTIAL AND IS SUPPLIED ON THE EXPRESS CONDITION THAT IT IS NOT TO BE USED FOR ANY PURPOSE OR COPIED OR COMMUNICATED TO ANY OTHER PERSON WITHOUT WRITTEN PERMISSION FROM DART AEROSPACE LTD.

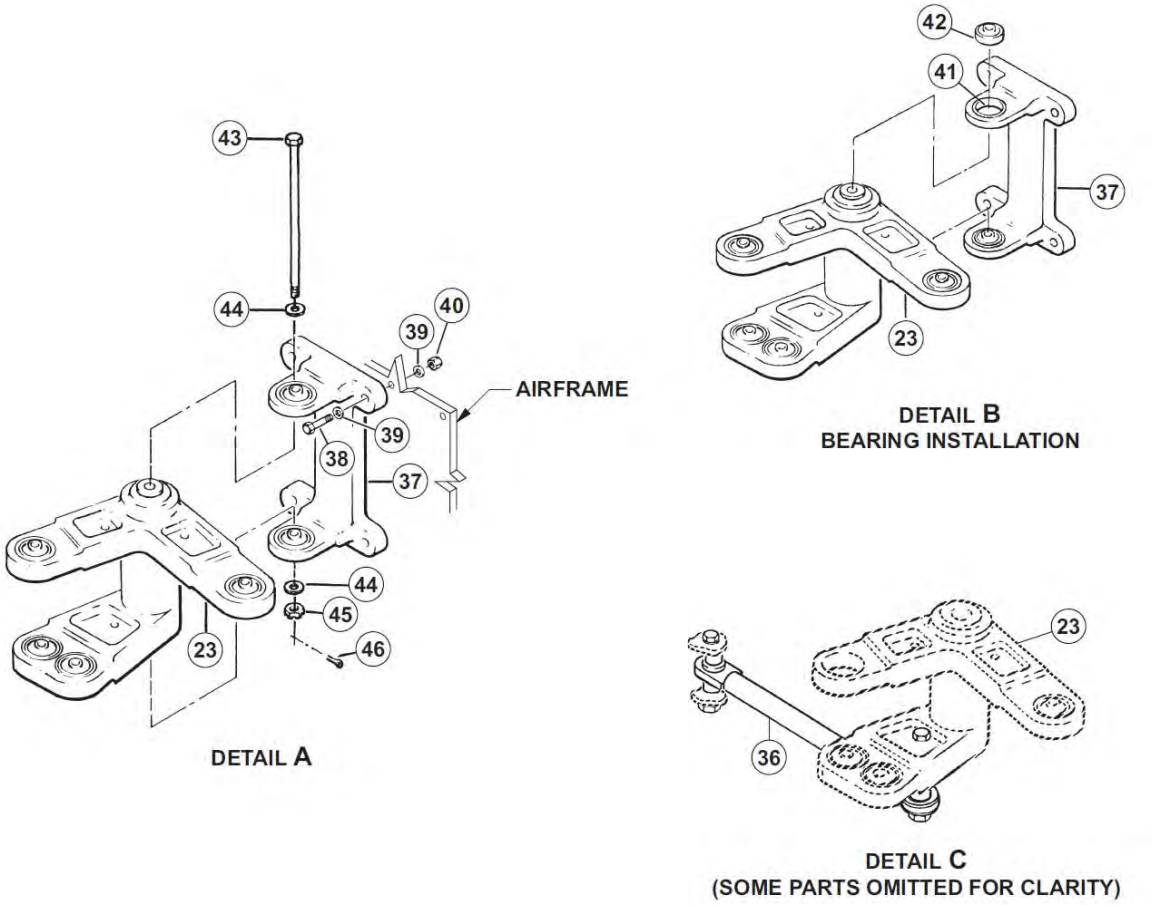

1. Bolt
2. Spring
3. Extension tube
4. Boot
5. Universal
6. Cylinder support
7. Hydraulic cylinder
8. Bellcrank
9. Control tube (2)
10. Extension tube
11. Boot
12. Universal
13. Support
14. Hydraulic cylinder
15. Bellcrank
16. Control tube
17. Magnetic brake
18. Force gradient
19. Control tube
20. Magnetic brake
21. Force gradient
22. Control tube
23. Bellcrank
24. Control tube
25. Pilot cyclic stick
26. Cyclic jackshaft
27. Control tube
28. Mixing lever
29. Control tube
30. Valve arm
31. Stop bolt
32. Stop bolt
33. Bolt
34. Plate
35. SpringBellcrank
36. Transducer
37. Support assembly
38. Bolt
39. Washer
40. Nut
41. Sleeve
42. Bearing
43. Bolt
44. Washer
45. Nut
46. Cotter pin

Figure 67-3. Cyclic Controls (Sheet 2 of 2)

• COPYRIGHT © 2007 BY DART AEROSPACE LTD. •
THIS DOCUMENT IS PRIVATE AND CONFIDENTIAL AND IS SUPPLIED ON THE EXPRESS CONDITION THAT IT IS NOT TO BE USED FOR ANY PURPOSE OR COPIED OR COMMUNICATED TO ANY OTHER PERSON WITHOUT WRITTEN PERMISSION FROM DART AEROSPACE LTD.

67.1.7 Cyclic Controls (Helicopter s/n 30850 and subsequent).

MATERIALS REQUIRED

NUMBER	NOMENCLATURE
C-308	Adhesive
C-405	Lockwire

SPECIAL TOOLS REQUIRED

NUMBER	NOMENCLATURE
T101330	Cyclic stick fixture

NOTE
Refer to paragraph 67.1.4 prior to beginning rigging.

67.1.7.1 Disconnect extension tubes (3 and 10, Figure 67-3) and spring (2) from swashplate horns.

67.1.7.2 Disconnect control tubes (9) from valve arm (30) of hydraulic cylinders (7 and 14).

67.1.7.3 Retract all stop bolts (views D and E) as far as possible and secure with lockwire (C-405)

67.1.7.4 Place pilot cyclic stick (25) in extreme aft left corner position, so upper arm of bellcrank (8), below right hydraulic cylinder (7), is in upper most position.

67.1.7.5 Bottom out piston at top of right hydraulic cylinder (7). Set valve arm (30) in position as shown in view A.

67.1.7.6 Adjust control tube (9) to fit, then shorten tube by three turns of rod end bearing and install on valve arm.

67.1.7.7 Place pilot cyclic stick (25) in extreme aft right corner position so upper arm of bellcrank (15), below the left hydraulic cylinder (14), is in uppermost position.

67.1.7.8 Bottom out piston at top of left hydraulic cylinder (14) and set valve arm (30) in position as shown in view A.

67.1.7.9 Adjust control tube (9) to fit then shorten tube by three turns of rod end bearing and install.

67.1.7.10 Position pilot cyclic control stick perpendicular to the deck within ½°.

NOTE
Alternate procedure for centering cyclic stick with copilot cyclic stick installed: Install T101330 cyclic stick fixture on copilot cyclic stick.

67.1.7.11 Set swashplate as per dimensions of Figure 67-4.

67.1.7.12 Position valve arm (30, Figure 67-3) to center.

67.1.7.13 Adjust each extension tube to correct length and attach to swashplate with bolt, washer, nut, and cotter pin. Torque jamnuts on control tubes 1500 to 1800 in.lbs. (169.47 to 203.36 Nm) and secure with lockwire (C-405) (Figure 67-1, detail D). Apply adhesive (C-308) around nut, lock, and threads on clevis.

NOTE
If rigging system with hydraulic cylinder not completely bled of air, bottom valve arm (30, Figure 67-3) at top of travel. Adjust extension tube (3 and 10) to fit swashplate; shorten one full turn and attach as described in step 67.1.7.13.

67.1.7.14 Install extension tubes (3 and 10) on swashplate horns with bolts and nuts. Secure with cotter pins.

NOTE
When rigging with fluid in bled hydraulic system, the hydraulic cylinder valve arms should be centered and no change in extension tubes (3 and 10) adjustment is required.

67.1.7.15 Position output arm of longitudinal and lateral magnetic brakes (17 and 20) at center of travel (views B and C).

67.1.7.16 Place pilot cyclic stick (25) against extreme forward stop. Place output arm

• COPYRIGHT © 2007 BY DART AEROSPACE LTD. •
THIS DOCUMENT IS PRIVATE AND CONFIDENTIAL AND IS SUPPLIED ON THE EXPRESS CONDITION THAT IT IS NOT TO BE USED FOR ANY PURPOSE OR COPIED OR COMMUNICATED TO ANY OTHER PERSON WITHOUT WRITTEN PERMISSION FROM DART AEROSPACE LTD.

of longitudinal magnetic brake (17) against aft stop. Adjust force gradient (18) to fit. Extend clevis on force gradient (18) two turns and install. For initial installation, install spring (35) in fourth hole in plate (34).

NOTE

With hydraulic boost on or at ground run-up, adjust spring tension to position pilot cyclic stick (25) (longitudinal cyclic only) perpendicular to deck within 2°.

67.1.7.17 Position pilot cyclic stick (25) perpendicular to deck within 0.5°. Set output arm of lateral magnetic brake (20) at center of travel (view C). Adjust force gradient (21) to fit and install with bolt and washer. Secure bolt head with lockwire (C-405).

NOTE

Check clearances between force gradient (21) and structure at extreme positions of magnetic brake arm. If required, re-index arm relative to shaft by one serration for clearance. Repeat step 6.1.7.17.

67.1.7.18 Connect spring (2) to bracket on right forward horn of swashplate.

67.1.7.19 Check complete system for secure installation and unobstructed full travel.

NOTE

Adjust swashplate lateral pre-tilt, within dimension of Figure 67-4, for satisfactory flight.

• COPYRIGHT © 2007 BY DART AEROSPACE LTD. •
THIS DOCUMENT IS PRIVATE AND CONFIDENTIAL AND IS SUPPLIED ON THE EXPRESS CONDITION THAT IT IS NOT TO BE USED FOR ANY PURPOSE OR COPIED OR COMMUNICATED TO ANY OTHER PERSON WITHOUT WRITTEN PERMISSION FROM DART AEROSPACE LTD.

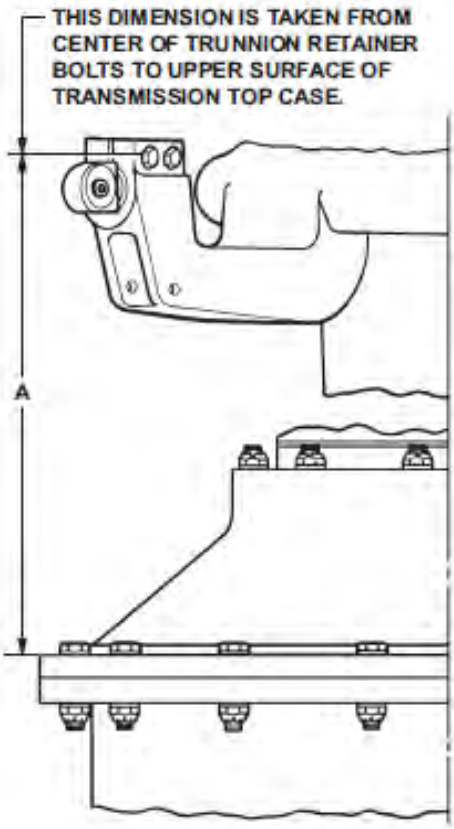

SWASHPLATE SETTING WITH RESPECT TO MAST		DIMENSION A	
FORE AND AFT	LATERAL	RIGHT HORN	LEFT HORN
1° DOWN AFT	2° DOWN LEFT	14.44 IN. (366.78 mm) 14.38 IN. (365.25 mm)	14.00 IN. (355.6 mm) 13.94 IN. (354.08 mm)
1° DOWN AFT	2° 1/2 DOWN LEFT	14.50 IN. (368.3 mm) 14.44 IN. (366.78 mm)	13.94 IN. (354.08 mm) 13.88 IN. (352.55 mm)

ADJUST 2° TO 2 1/2° DOWN LEFT AS REQUIRED FOR SATISFACTORY FLIGHT.

Figure 67-4. Swashplate Pre-tilt Settings

• COPYRIGHT © 2007 BY DART AEROSPACE LTD. •
THIS DOCUMENT IS PRIVATE AND CONFIDENTIAL AND IS SUPPLIED ON THE EXPRESS CONDITION THAT IT IS NOT TO BE USED FOR ANY PURPOSE OR COPIED OR COMMUNICATED TO ANY OTHER PERSON WITHOUT WRITTEN PERMISSION FROM DART AEROSPACE LTD.

CHAPTER 67 – FLIGHT CONTROLS (67-00-00)

67.1.8 Anti-Torque Controls (Helicopters Prior to s/n 31175)

MATERIALS REQUIRED

NUMBER	NOMENCLATURE
C-405	Lockwire

NOTE

Refer to paragraph 67.1.4 prior to beginning rigging.

67.1.8.1 Ensure linkage is complete, with the following adjustable links and control tubes disconnected:

67.1.8.1.1 Pitch change links (3, Figure 67-5) from tail rotor blades.

67.1.8.1.2 Link (6) from lever on left side of tail rotor gearbox.

67.1.8.1.3 Control tube (12) from bellcrank (13) above hydraulic cylinder.

67.1.8.1.4 Force gradient (31) from pedal adjuster (28).

NOTE

For rigging copilot pedals if copilot dual control kit is installed, refer to appropriate Service Instruction.

67.1.8.2 Retract all adjustable stop bolts (detail E) as far as possible.

NOTE

Adjustment of pitch change link length not required for fixed length pitch change links (Post TB 212-01-185)

67.1.8.3 Adjust both pitch change links (3) to initial length of 6.115 ±0.010 in. (155.32 ±0.254 mm) between centers of rod end bearings.

67.1.8.4 Connect each link to blade pitch horn with bolt and floating bushing. Torque bolt to 135 in.lbs. (15.26 Nm). Secure with lockwire (C-405).

CAUTION

DO NOT MEASURE BETWEEN CROSSHEAD AND WEAR INDICATOR, IF INSTALLED. MEASUREMENT SHALL BE TAKEN BETWEEN CROSSHEAD AND TRUNNION.

67.1.8.5 Position tail rotor blades to obtain dimensions of 4.032 ± 0.010 in. (102.413 ±0.254 mm) between inboard face of crosshead and outboard face of hub trunnion (detail C).

67.1.8.6 Holding specified position of rotor, adjust link (6) to obtain 0.40 in. (10.16 mm) minimum clearance (detail D) with bellcrank (7) and connect link to lever (5) with bolt, washers, and nut. Torque nut 60 to 110 in.lbs. (6.78 to 12.43 Nm). Install cotter pin.

67.1.8.7 Check clevis on cylinder (15) for 1.22 in. (30.99 mm) dimension from end of piston rod to center of clevis bolt hole.

67.1.8.8 Hold left pedal full forward. Push down on hydraulic cylinder rod to bottom actuator valve.

67.1.8.9 Maintaining specified rotor position, adjust control tube (12) to fit on bellcrank (13), then shorten tube one-half turn and connect.

67.1.8.10 Place left pedal in full forward position. Push down on tail rotor servo control rod to center valve arm and remove control system looseness.

67.1.8.11 Flap tail rotor assembly to one extreme and check for clearance between blade and tail rotor yoke using a 0.010 in. (0.254 mm) feeler gage (Figure 67-7). Perform clearance check on same blade with tail rotor flapped to opposite extreme. Accomplish clearance check on opposite blade in same manner.

• COPYRIGHT © 2007 BY DART AEROSPACE LTD. •
THIS DOCUMENT IS PRIVATE AND CONFIDENTIAL AND IS SUPPLIED ON THE EXPRESS CONDITION THAT IT IS NOT TO BE USED FOR ANY PURPOSE OR COPIED OR COMMUNICATED TO ANY OTHER PERSON WITHOUT WRITTEN PERMISSION FROM DART AEROSPACE LTD.

67.1.8.12 If clearance is less than 0.010 in. (0.254 mm), verify rigging procedures have been performed correctly.

NOTE

Maximum exposed thread length on fixed control rod clevis is 1.00 in. (25.4 mm).

67.1.8.13 Rig and connect force trim as follows:

67.1.8.13.1 Hold pedals in neutral position.

67.1.8.13.2 Position arm of magnetic brake (32, Figure 67-5) at center of travel (detail B).

67.1.8.13.3 Adjust tube of force gradient (31) and connect to bellcrank of pedal adjuster (28).

67.1.8.13.4 Check for clearance of force gradient and structure at extreme positions of brake arm. If required to obtain clearance, arm can be re-indexed on brake shaft by one serration.

67.1.8.14 Operate system through full travel to check for any binding or interference.

NOTE

Adjustment of pitch change link length not required for fixed length pitch change links (Post TB 212-01-185)

67.1.8.15 Check track of tail rotor in operation (Chapter 62). If required for track, adjust pitch change links by half-turn increments, alternately, in opposite directions.

67.1.8.16 Check complete system for security and safetying of parts. Check control system for clearance and freedom of operation.

• COPYRIGHT © 2007 BY DART AEROSPACE LTD. •
THIS DOCUMENT IS PRIVATE AND CONFIDENTIAL AND IS SUPPLIED ON THE EXPRESS CONDITION THAT IT IS NOT TO BE USED FOR ANY PURPOSE OR COPIED OR COMMUNICATED TO ANY OTHER PERSON WITHOUT WRITTEN PERMISSION FROM DART AEROSPACE LTD.

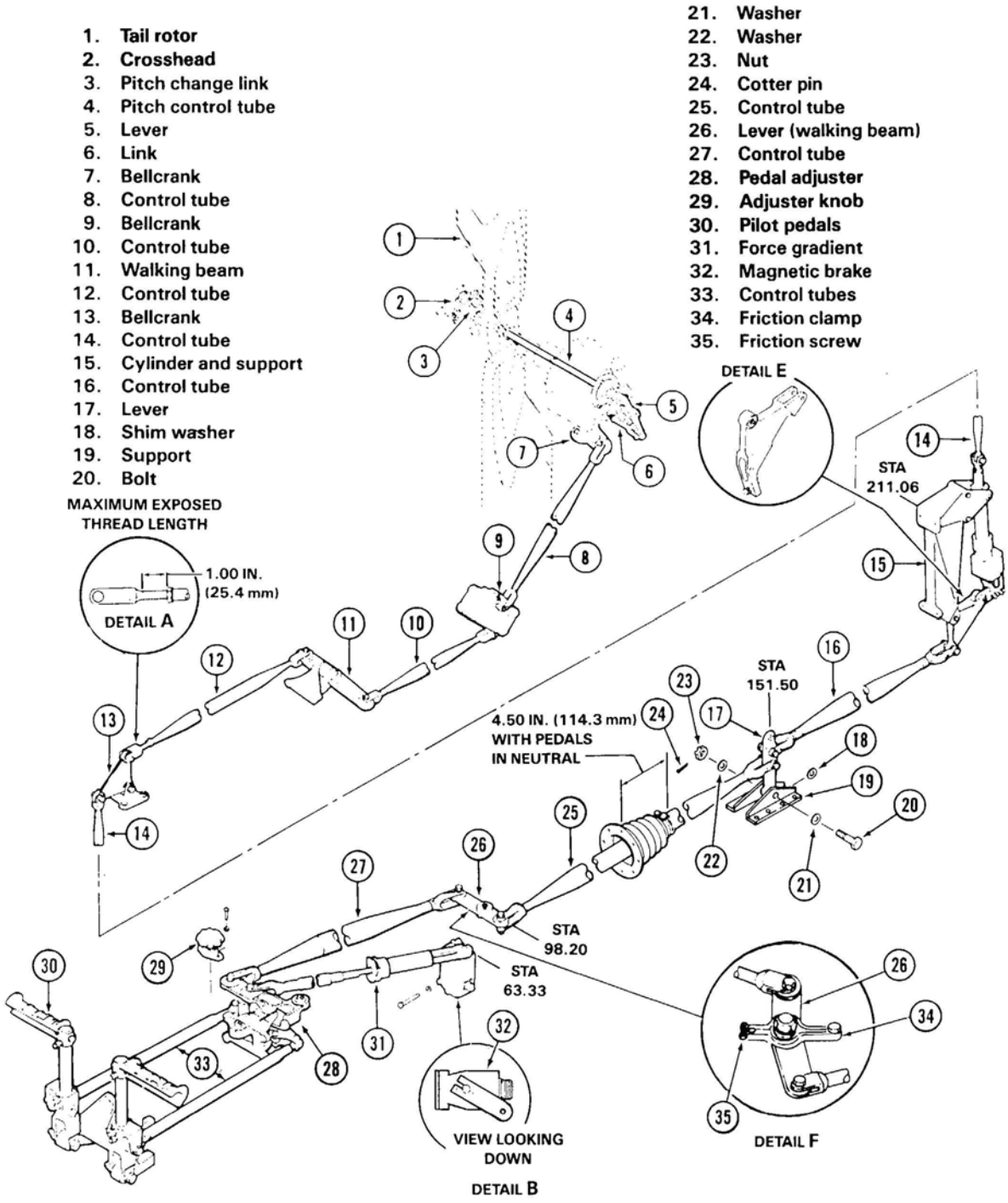

Figure 67-5. Anti-Torque Controls (Sheet 1 of 2)

• COPYRIGHT © 2007 BY DART AEROSPACE LTD. •
THIS DOCUMENT IS PRIVATE AND CONFIDENTIAL AND IS SUPPLIED ON THE EXPRESS CONDITION THAT IT IS NOT TO BE USED FOR ANY PURPOSE OR COPIED OR COMMUNICATED TO ANY OTHER PERSON WITHOUT WRITTEN PERMISSION FROM DART AEROSPACE LTD.

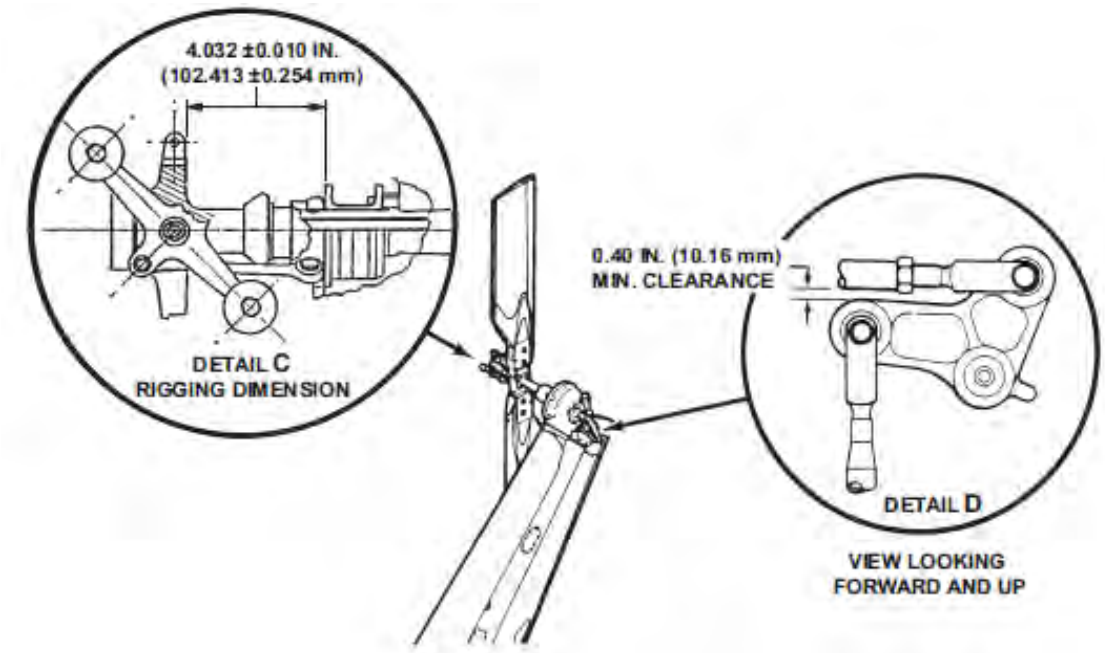

Figure 67-5. Anti-Torque Controls (Sheet 2 of 2)

67.1.9 Anti-Torque Controls (212-011-701 Hub and Blade) (Helicopter s/n 31175 and Sub.)

MATERIALS REQUIRED

NUMBER	NOMENCLATURE
C-405	Lockwire

NOTE
Refer to paragraph 67.1.4 prior to beginning rigging.

67.1.9.1 Check linkage is complete, except for the following adjustable links and control tubes disconnected:

67.1.9.1.1 Pitch change links (3, Figure 67-5) from tail rotor blades.

67.1.9.1.2 Link (6) from lever on left side of tail rotor gearbox.

67.1.9.1.3 Control tube (12) from bellcrank (13) above hydraulic cylinder.

67.1.9.1.4 Force gradient (31) from pedal adjuster (28).

NOTE
Refer to appropriate Service Instruction for rigging copilot pedals if dual controls are installed.

67.1.9.2 Retract all adjustable stop bolts (Detail E) as far as possible.

NOTE
Adjustment of pitch change link length not required for fixed length pitch change links (Post TB 212-01-185)

67.1.9.3 Adjust both pitch change links (3) to initial length of 6.180 ±0.010 in. (156.972 ±0.254 mm) between centers of rod end bearings. Connect each link to blade pitch horn with bolt and floating bushing. Torque bolt to 135 in.lbs. (15.26 Nm). Secure with lockwire (C-405).

67.1.9.4. Position tail rotor blades to

• COPYRIGHT © 2007 BY DART AEROSPACE LTD. •
THIS DOCUMENT IS PRIVATE AND CONFIDENTIAL AND IS SUPPLIED ON THE EXPRESS CONDITION THAT IT IS NOT TO BE USED FOR ANY PURPOSE OR COPIED OR COMMUNICATED TO ANY OTHER PERSON WITHOUT WRITTEN PERMISSION FROM DART AEROSPACE LTD.

obtain dimension of 4.334 ±0.010 in. (110.084 ±0.254 mm) between inboard face of crosshead and outboard face of trunnion journal (Figure 67-6, detail A).

67.1.9.5 Holding specified position of rotor, adjust link (6, Figure 67-5) to obtain 0.58 in. (14.73 mm) minimum clearance with bellcrank (7) and connect link to lever (5) with bolt, washers, and nut (Figure 67-6, detail B). Torque nut 60 to 110 in.lbs. (6.78 to 12.42 Nm). Install cotter pin.

67.1.9.6 Check clevis on cylinder (15, Figure 67-5) for 1.22 in. (30.99 mm) dimension from end of piston rod to center of clevis bolt hole.

67.1.9.7 Hold left pedal full forward. Push down on hydraulic cylinder rod to bottom actuator valve. Maintaining specified rotor position, adjust control tube (12) to fit on bellcrank (13), then shorten tube one-half turn and connect.

67.1.9.8 Place left anti-torque pedal in full forward position. Push down on tail rotor servo control rod to center valve arm and remove control system looseness.

67.1.9.9 Flap tail rotor assembly to one extreme and check for clearance between blade and tail rotor yoke using a 0.010 in. (0.254 mm) feeler gage (Figure 67-7). Perform clearance check on same blade with tail rotor flapped to opposite extreme. Accomplish clearance check on opposite blade in same manner.

67.1.9.10 If clearance is less than 0.010 in. (0.254 mm) verify rigging procedures have been performed correctly.

NOTE

Maximum exposed thread length on fixed control rod clevis is 1.0 in. (25.4 mm) (Figure 67-5, detail A).

67.1.9.11 Rig and connect force trim as follows:

67.1.9.11.1 Hold pedals in neutral position.

67.1.9.11.2 Position arm of magnetic brake (32) at center of travel (detail B).

67.1.9.11.3 Adjust tube of force gradient (31) and connect to bellcrank of pedal adjuster (28).

67.1.9.11.4 Check for clearance of force gradient and structure at extreme positions of brake arm. If required to obtain clearance, arm can be re-indexed on brake shaft by one serration.

67.1.9.12 Operate system through full travel to check for any binding or interference.

NOTE

Adjustment of pitch change link length not required for fixed length pitch change links (Post TB 212-01-185)

67.1.9.13 Check track of tail rotor in operation (Chapter 62). If required for track, adjust pitch change links in half-turn increments, alternately, in opposite directions.

67.1.9.14 Check complete system for security and safetying. Check control system for clearance and freedom of operation.

• COPYRIGHT © 2007 BY DART AEROSPACE LTD. •
THIS DOCUMENT IS PRIVATE AND CONFIDENTIAL AND IS SUPPLIED ON THE EXPRESS CONDITION THAT IT IS NOT TO BE USED FOR ANY PURPOSE OR COPIED OR COMMUNICATED TO ANY OTHER PERSON WITHOUT WRITTEN PERMISSION FROM DART AEROSPACE LTD.

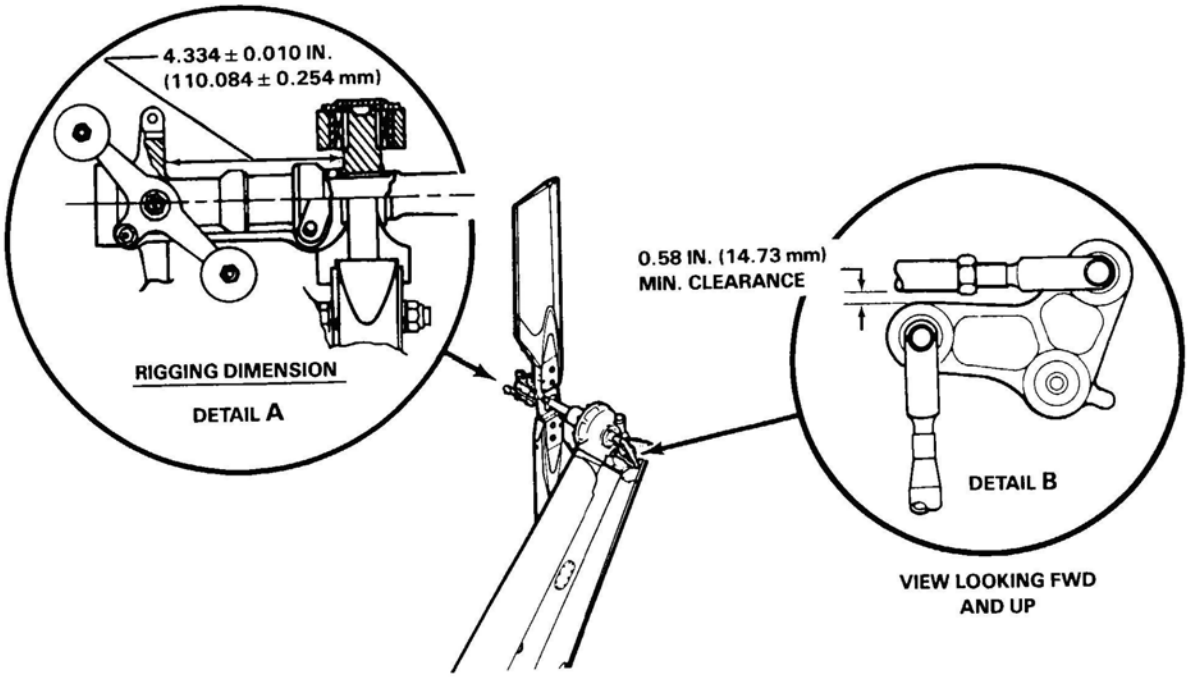

Figure 67-6. Anti-Torque Rigging (212-011-701 Hub and Blade) (Helicopter s/n 31175 and Subsequent)

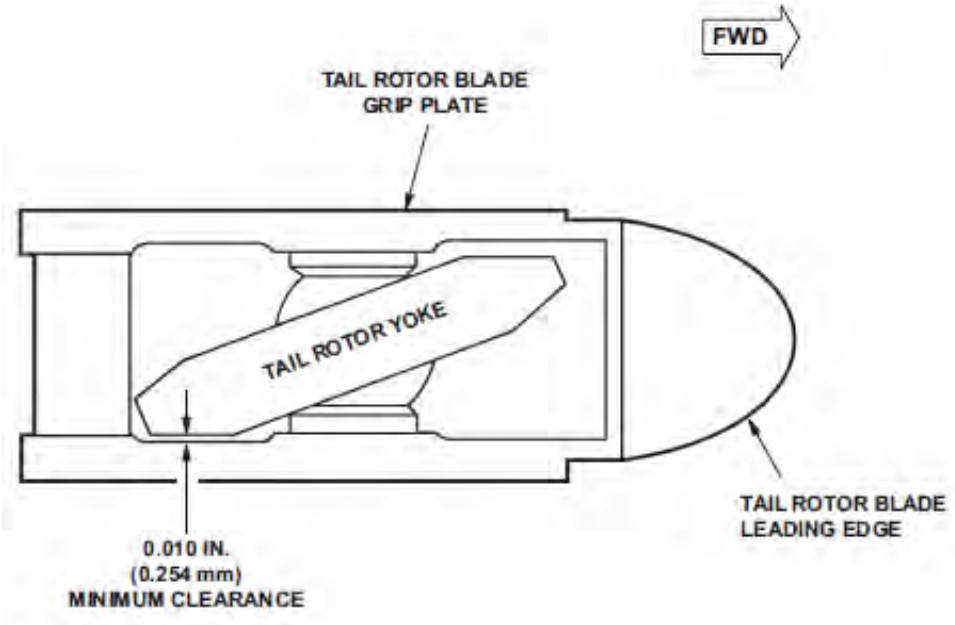

Figure 67-7. Tail Rotor Blade to Yoke Clearance

• COPYRIGHT © 2007 BY DART AEROSPACE LTD. •
THIS DOCUMENT IS PRIVATE AND CONFIDENTIAL AND IS SUPPLIED ON THE EXPRESS CONDITION THAT IT IS NOT TO BE USED FOR ANY PURPOSE OR COPIED OR COMMUNICATED TO ANY OTHER PERSON WITHOUT WRITTEN PERMISSION FROM DART AEROSPACE LTD.

67.1.10 Synchronized Elevator Controls

SPECIAL TOOLS REQUIRED

NUMBER	NOMENCLATURE
T101330	Cyclic Stick Fixture

NOTE

Refer to paragraph 67.1.4 prior to beginning rigging.

NOTE

The following shall be accomplished after installation of all bellcranks and nonadjustable control tubes (20, 13, 7, and 10, Figure 67-8) and with swashplate in position shown on Figure 67-4.

67.1.10.1 Rig synchronized elevator with hydraulic system off as follows:

67.1.10.1.1 Position cyclic stick in neutral.

NOTE

If dual control kit is installed, install cyclic stick fixture (T101330) on copilot cyclic stick.

67.1.10.1.2 Position cyclic hydraulic cylinder control valves to top of travel. Adjust and connect tube (19, Figure 67-8) to obtain dimension of 2.20 in. (55.88) from top surface of idler (17) to centerline of lower bolts in idler support (view B).

CAUTION

ENSURE BOLTS ATTACHING CONTROL TUBES (16 AND 19) TO IDLER (17) ARE INSTALLED WITH BOLT HEADS INBOARD (VIEW B). BOLTS IN WRONG DIRECTION COULD INTERFERE WITH ENGINE POWER CONTROL LINKAGE

NOTE

Do not allow cyclic controls below cylinder to move while bottoming valves.

67.1.10.1.3 Verify control tube (4) is disconnected from bellcrank (5).

67.1.10.1.4 Set right elevator (1) so upper surface passes through rigging rivet **P** (located on right side of tailboom, aft of elevator) for maximum nose down position (view A). Adjust control tube (4) to minimum length that will reach bellcrank (5) and connect. Tube will be in line with horn assembly arm and pivot at bellcrank (5) (view C).

67.1.10.1.5 Loosen cyclic stick friction (or remove cyclic stick fixture (T101330) from copilot cyclic control stick, if installed). Hold pilot control stick full forward.

67.1.10.1.6 Set right elevator upper surface 0.50 to 0.75 in. (12.70 to 19.05 mm) below rivet **R** for full forward cyclic control stick position (view A.) Aft arm of bellcrank (5) shall be above horizontal.

67.1.10.1.7 With valves in both cyclic control hydraulic cylinders positioned at top of travel, adjust control tube (16) to fit and connect.

67.1.10.1.8 Hold pilot cyclic control stick full aft. Check right elevator upper surface for alignment to rigging rivet **S** within ±0.40 (10.16 mm) as shown in view A, with valves centered or boost on.

67.1.10.1.9 Check system for freedom of operation and full travel.

67.1.10.1.10 With hydraulic boost cart connected and operating, place pilot cyclic control stick full forward. Check alignment of right elevator upper surface to rigging rivet **R**. If necessary, readjust control tube (16) only to align trailing edge with rivet **R**.

67.1.10.2 Rig synchronized elevator with hydraulic system on as follows:

• COPYRIGHT © 2007 BY DART AEROSPACE LTD. •
THIS DOCUMENT IS PRIVATE AND CONFIDENTIAL AND IS SUPPLIED ON THE EXPRESS CONDITION THAT IT IS NOT TO BE USED FOR ANY PURPOSE OR COPIED OR COMMUNICATED TO ANY OTHER PERSON WITHOUT WRITTEN PERMISSION FROM DART AEROSPACE LTD.

CHAPTER 67 – FLIGHT CONTROLS (67-00-00)

NOTE

All rigging to be accomplished with hydraulic boost on, boost cart connected and operating, or with hydraulic valve arm centered.

67.1.10.2.1 Disconnect elevator control tubes at rigging points.

67.1.10.2.2 Position pilot cyclic stick perpendicular (centered) to deck within 0.5°. Swashplate shall be positioned as shown in Figure 67-4.

CAUTION

DO NOT ALLOW CYCLIC CONTROLS BELOW HYDRAULIC SERVO ACTUATORS TO MOVE WHILE CENTERING SERVO ACTUATOR VALVE ARMS.

NOTE

Alternate procedure for centering cyclic stick with copilot cyclic stick installed: Install T101330 rigging fixture on copilot cyclic stick.

67.1.10.2.3 Position idler (17, Figure 67-8, view B) to 2.30 to 2.40 in. (58.42 to 60.96 mm) dimension as shown. Adjust control tube (19) to fit and install.

67.1.10.2.4 Set upper surface of right elevator to align with rivet **P**. Adjust control tube (4) to minimum length that will reach bellcrank (5) and install. Centerline of control tube (4) will pass through output connection and pivot of bellcrank (5).

67.1.10.2.5 Place pilot cyclic stick in extreme forward position against stick stop and center valves of cyclic hydraulic servo actuators. Set upper surface of right elevator to align with rivet **R**. Aft arm of bellcrank (5) shall be above centered position of step d. Adjust control tube (16) to fit and install.

67.1.10.2.6 With hydraulic power applied to system, recheck elevator rigging as follows:

67.1.10.2.6.1 Place pilot cyclic stick in extreme forward position against stick stop. Readjust control tube (16), if necessary, to align right elevator upper surface on rivet **R**.

67.1.10.2.6.2 Place pilot cyclic stick in extreme aft position against stick stop. Check right elevator upper surface on rivet **S** within ±0.40 in. (10.16 mm). If elevator does not check within the ±0.40 in. (10.16 mm) on rivet 5, repeat steps 67.1.10.2.2. through 67.1.10.2.5.

• COPYRIGHT © 2007 BY DART AEROSPACE LTD. •
THIS DOCUMENT IS PRIVATE AND CONFIDENTIAL AND IS SUPPLIED ON THE EXPRESS CONDITION THAT IT IS NOT TO BE USED FOR ANY PURPOSE OR COPIED OR COMMUNICATED TO ANY OTHER PERSON WITHOUT WRITTEN PERMISSION FROM DART AEROSPACE LTD.

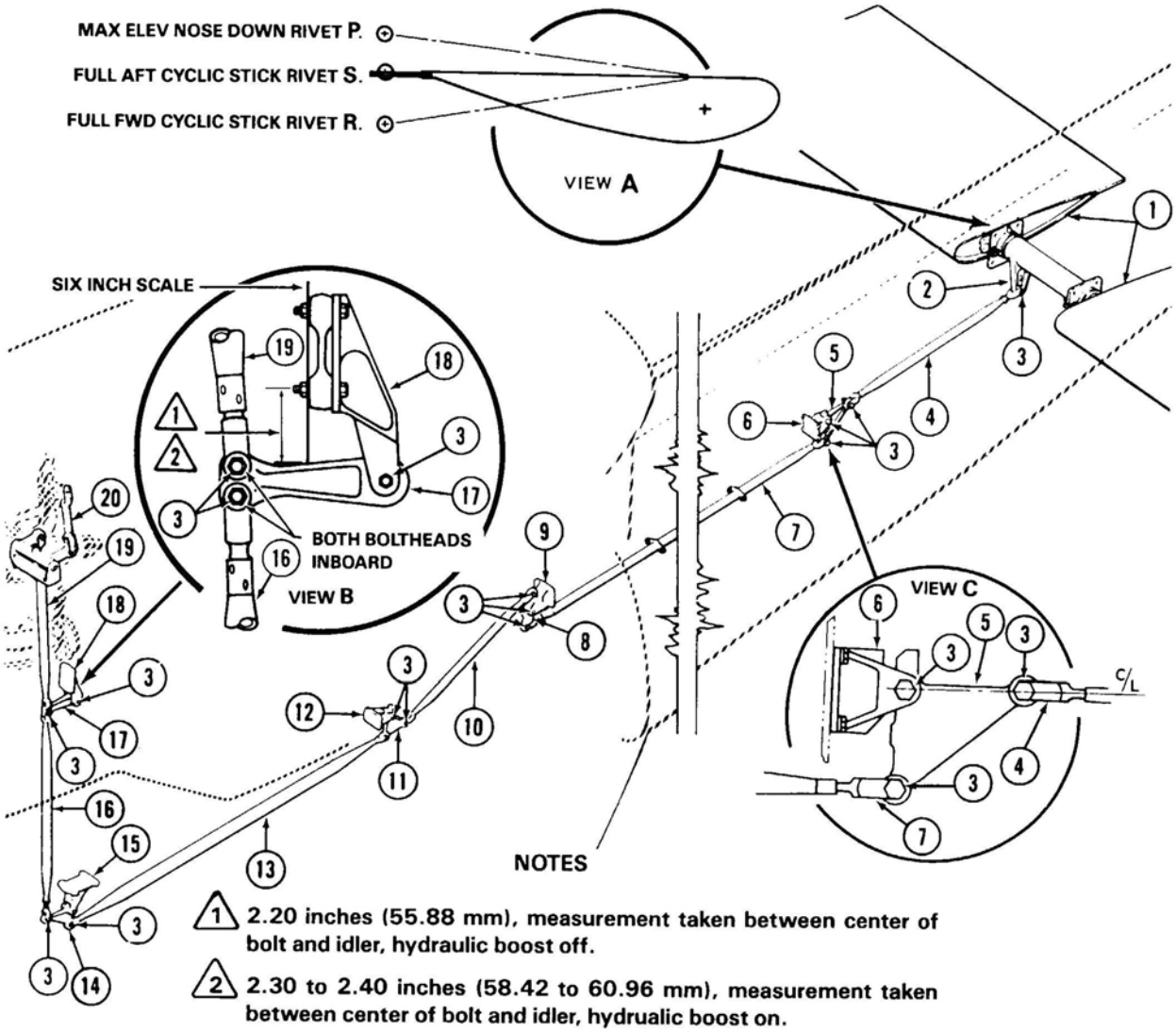

Figure 67-8. Synchronized Elevator Controls Rigging

• COPYRIGHT © 2007 BY DART AEROSPACE LTD. •
THIS DOCUMENT IS PRIVATE AND CONFIDENTIAL AND IS SUPPLIED ON THE EXPRESS CONDITION THAT IT IS NOT TO BE USED FOR ANY PURPOSE OR COPIED OR COMMUNICATED TO ANY OTHER PERSON WITHOUT WRITTEN PERMISSION FROM DART AEROSPACE LTD.

67.2 COLLECTIVE FLIGHT CONTROLS

67.2.1 Collective Controls

The collective control system consists of a jackshaft assembly with pilot control stick, push-pull tubes and bellcranks, and a dual hydraulic power cylinder connected to a control lever below the swashplate. Movement of collective control stick is transmitted through linkage and power cylinder to main rotor pitch control mechanism, causing helicopter to ascend or descend or to remain at constant altitude. The hydraulic power cylinder incorporates a check valve system to provide irreversibility to reduce feedback forces to controls in event of hydraulic power failure.

67.2.2 Collective Control Stick and Jackshaft

Pilot collective pitch control stick extends up and forward through a flexible boot in floor at left side of seat, and is connected to a jackshaft mounted laterally under floor. A knurled collar on stick allows adjustment of friction drag. A spring-loaded down lock is provided on floor below stick. Twist-grip type power control, with friction adjustment, is incorporated in control stick assembly. A switch box on top of collective stick contains control switches for engine starting, engine governor rpm, idle stop release, landing light and searchlight.

67.2.2.1 Removal

67.2.2.1.1 Remove boot from pilot collective stick.

67.2.2.1.2 Disconnect electrical cable connector. Disconnect power control system tube from gear lever on lower end of collective stick.

67.2.2.1.3 Remove two bolts and tapered bushings attaching tube (6, Figure 67-9) to elbow (4). Identify bolts and bushings for reinstallation in same location.

67.2.2.1.4 Remove two screws and two bolts attaching housing (5) to structural intercostal. Remove collective stick (3) and housing (5).

67.2.2.1.5 Disconnect pitch control tube (9) from arm (7) on jackshaft.

67.2.2.1.6 Remove two bolts and tapered bushings attaching tubes (6) and (10) to arm (7). Identify bolts and bushings for reinstallation in same location.

67.2.2.1.7 Remove tube (6) and arm (7).

67.2.2.1.8 Disconnect power control tube from lever on elbow (12).

67.2.2.1.9 Disconnect electrical connection on copilot stick (if installed).

67.2.2.1.10 Remove two bolts and tapered bushings attaching tube (10) to elbow (12). Identify bolts and bushings for reinstallation in same location.

67.2.2.1.11 Remove four bolts attaching support (11) to intercostal structural member and lift elbow and support. Identify shims for reinstallation.

67.2.2.1.12 Remove bolts from support (8) and remove support and jackshaft tube (10).

67.2.2.2 Inspection

67.2.2.2.1 Inspect all components of the collective control stick assembly for nicks, scratches, dents, broken or bent tubing, and frayed, worn or broken wiring.

67.2.2.2.2 Inspect tubes for nicks, dents, and scratches.

67.2.2.2.3 Inspect friction mechanism on left side of collective jackshaft for wear and general condition.

67.2.2.2.4 Check pilot collective stick friction

• COPYRIGHT © 2007 BY DART AEROSPACE LTD. •
THIS DOCUMENT IS PRIVATE AND CONFIDENTIAL AND IS SUPPLIED ON THE EXPRESS CONDITION THAT IT IS NOT TO BE USED FOR ANY PURPOSE OR COPIED OR COMMUNICATED TO ANY OTHER PERSON WITHOUT WRITTEN PERMISSION FROM DART AEROSPACE LTD.

for proper operation.

67.2.2.2.5 Inspect throttle controls grips retaining pin, both pilot and, if installed copilot stick, for looseness. Also inspect throttle(s) for smoothness of operation.

67.2.2.2.6 Inspect spacer (number two throttle grip position) both pilot and, if installed copilot stick, for looseness.

67.2.2.3 Repair

MATERIALS REQUIRED

Refer to BHT-ALL-SPM for specification and source.

NUMBER	NOMENCLATURE
C-204	Primer
C-309	Methyl-Ethyl-Ketone (MEK)
C-313	Adhesive
C-423	Abrasive Cloth or Paper

SPECIAL	TOOLS REQUIRED
NUMBER	NOMENCLATURE
T27872-2	Reamer

67.2.2.3.1 Twist grip.

67.2.2.3.1.1 If engine control twist grip retaining pin, pilot and/or copilot, are found loose, proceed as follows:

67.2.2.3.1.1.1 Use abrasive cloth or paper (C-423) and clean area surrounding pin. Wipe area with a clean, lint-free cloth dampened with MEK (C-309).

67.2.2.3.1.1.2 Apply adhesive (C-313) over head of pins, using slight pressure to ensure sufficient bond. Allow adhesive to dry, then sand to smooth contour.

NOTE

Hole opposite pin is provided for disassembly purposes only. Do not apply adhesive to this area.

67.2.2.3.2 If spacer is loose proceed as follows:

67.2.2.3.2.1 Pilot collective:

67.2.2.3.2.1.1 Remove collective switch box and throttle grip in accordance with BHT-212-CR&O section 67-12, paragraphs 1 through 9. Remove roll-pin p/n NAS561C4-24 from upper end of spacer. Slide spacer up collective tube.

67.2.2.3.2.1.2 Remove traces of old adhesive (C-313). Wipe bearing surfaces of collective tube at the number two throttle position with a clean lint free cloth dampened with MEK (C-309). Apply a small amount of adhesive (C-313) and slide spacer back down.

67.2.2.3.2.1.3 Insert roll-pin to pass through throttle pin slot between number one throttle shaft and solid ends of slot. Ensure ends of roll pin are flush with spacer surface and secure with a drop of adhesive (C-313).

67.2.2.3.2.1.4 Re-install throttle grip and switch box in accordance with BHT-212-CR&O section 67-13, paragraphs 12 through 19.

67.2.2.3.2.3 Copilot collective:

67.2.2.3.2.3.1 Remove roll-pin p/n NAS561C4-24 from upper end of spacer. Slide pacer down collective tube.

67.2.2.3.2.3.2 Remove traces of old adhesive (C-313). Wipe bearing surfaces of collective tube at the number two throttle position with a clean lint free cloth dampened with MEK (C-309). Apply a small amount of adhesive (C-313) and slide spacer back up.

67.2.2.3.2.3.3 Insert roll-pin to pass through throttle pin slot between number one throttle shaft and solid ends of slot. Ensure ends of roll pin are flush with spacer surface and secure with a drop of adhesive (C-313).

67.2.2.3.3 Repair of mechanical damage shall not exceed original damage depth and width of repair area at any section shall not exceed one third of tube circumference.

• COPYRIGHT © 2007 BY DART AEROSPACE LTD. •
THIS DOCUMENT IS PRIVATE AND CONFIDENTIAL AND IS SUPPLIED ON THE EXPRESS CONDITION THAT IT IS NOT TO BE USED FOR ANY PURPOSE OR COPIED OR COMMUNICATED TO ANY OTHER PERSON WITHOUT WRITTEN PERMISSION FROM DART AEROSPACE LTD.

67.2.2.3.4 Repair of corrosion damage shall be twice depth of corrosion damage but not exceeding mechanical damage limits for depth or width.

67.2.2.3.5 Remove all mechanical and corrosion damage within limits with abrasive cloth or paper (C-423), to obtain a smooth scratch free surface. Apply primer (C-204) to repaired area.

67.2.2.3.6 Replace collective jackshaft as follows:

67.2.2.3.6.1 Assemble collective jackshaft (3, Figure 67-10), arm (4) and collective jackshaft (7).

67.2.2.3.6.2 Clamp in a suitable holding fixture. Position collective jackshaft (3) with arm (4) and pilot stick (11) 131.30° apart and forward.

67.2.2.3.6.3 Hold dimensions as shown in Figure 67-10.

67.2.2.3.6.4 Drill through collective jackshaft (3) and arm (4) with a No. F (0.257 in. (6.528 mm)) diameter drill.

67.2.2.3.6.5 Insert T27872-2 reamer so end of pilot projects through parts to be reamed.

67.2.2.3.6.6 Ream one side (smooth finish).

67.2.2.3.6.7 Install tapered bushing. Ream opposite hole using tapered bushing to support reamer pilot.

67.2.2.3.6.8 Disassemble and remove burrs and metal particles.

67.2.2.3.6.9 Install tapered bushing (13) and secure with bolt (10), washer and nut.

NOTE

After torquing bolt (10), the washer must be held off the surface of jackshaft tube within limits given in Figure 67-10, detail A.

67.2.2.3.6.10 Repeat sub steps 67.2.2.3.5.4 through 67.2.2.3.5.8 for remaining holes.

67.2.2.3.6.11 Apply primer (C-204) to all bare metal.

67.2.2.3.6.12 As applicable, align the holes in the collective jackshaft (3), arm (4), and collective jackshaft (7). Install the tapered bushings (13) and bolts (10) with a steel washer under each bolt head and nut. Torque the nuts 50 to 70 in-lbs (5.6 to 7.9 Nm). After torqueing, the tapered bushings must protrude within the 0.030 to 0.060 inch (0.761 to 1.525 mm) limits shown in Figure 67-10.

67.2.2.3.6.13 Install collective jackshaft assembly (paragraph 67.2.2.4).

67.2.2.4 Installation

MATERIALS REQUIRED

NUMBER	NOMENCLATURE
C-204	Epoxy Polyamide Primer
C-430	Barrier Tape

NOTE

If installing collective jackshaft, refer to paragraph 67.2.2.2, step 67.2.2.2.5.

67.2.2.4.1 Apply barrier tape (C-430) to mounting face of support (8, Figure 67-9) and install support and tube (10). Place support on left side of structure and install four bolts with plain aluminum alloy washers under heads and heads against support. Install four nuts with anodized aluminum alloy washers against structure.

67.2.2.4.2 Apply barrier tape (C-430) to mounting face of support (11).

67.2.2.4.3 Apply barrier tape (C-430) between faying surfaces and install elbow (12) and support (11) to structure with four bolts with aluminum alloy washers under bolt heads and nuts. Long bolt goes through clamp at upper aft position. Use shims between support (11) and structure as necessary to minimize deflection of flexible shafts.

• COPYRIGHT © 2007 BY DART AEROSPACE LTD. •
THIS DOCUMENT IS PRIVATE AND CONFIDENTIAL AND IS SUPPLIED ON THE EXPRESS CONDITION THAT IT IS NOT TO BE USED FOR ANY PURPOSE OR COPIED OR COMMUNICATED TO ANY OTHER PERSON WITHOUT WRITTEN PERMISSION FROM DART AEROSPACE LTD.

67.2.2.4.4 Align tube (10) with elbow (12) and attach with tapered bushings of correct size and two bolts with steel washers under bolt heads and nuts. Torque the nuts 50 to 70 in-lbs (5.6 to 7.9 Nm). After torqueing, the tapered bushings must protrude within the 0.030 to 0.060 inch (0.761 to 1.525 mm) limits shown in Figure 67-10.

67.2.2.4.5 Check throttle control gear sector for proper mating and backlash with flex shaft gear (paragraph 67.2.5).

67.2.2.4.6 Attach power control tube to gear sector lever.

67.2.2.4.7 Connect electrical connector below copilot stick (if installed).

67.2.2.4.8 Apply epoxy polyamide primer (C-204) to mating surface of arm (7) and tubes (6 and 10).

67.2.2.4.9 Align holes in arm (7) to tube (10) and attach with bushings of correct size and two bolts with steel washers under bolt heads and nuts.

67.2.2.4.10 Align holes in tube (6) with arm (7) and attach with tapered bushings of correct size and two bolts with steel washers under bolt heads and nuts. Torque the nuts 50 to 70 in-lbs (5.6 to 7.9 Nm). After torquing, the tapered bushings must protrude within the 0.030 to 0.060 inch (0.761 to 1.525 mm) limits shown in Figure 67-10.

67.2.2.4.11 Apply barrier tape (C-430) to mounting face of housing (5). Apply primer (C-204) to mating surfaces of tube (6) and elbow (4).

67.2.2.4.12 Position pilot collective stick in helicopter and attach to structure with two bolts and two screws. Install plain aluminum alloy washers on bolts next to collective stick housing (5). Install anodized aluminum alloy washers under nuts on two bolts and two screws.

67.2.2.4.13 Align holes in elbow (4) with holes in tube (6) and attach with tapered bushings of correct size and two bolts with steel washers under bolt heads and nuts. Torque the nuts 50 to 70 in-lbs (5.6 to 7.9 Nm). After torquing, the tapered bushings must protrude within the 0.030 to 0.060 inch (0.761 to 1.525 mm) limits shown in Figure 67-10.

67.2.2.4.14 Check throttle control gear sector for proper mating and backlash with flex shaft gear (paragraph 67.2.5).

67.2.2.4.15 Attach power control tubes to gear sector levers.

67.2.2.4.16 Connect electrical connector at base of pilot collective stick and secure boot.

67.2.2.4.17 Adjust collective friction (paragraph 67.2.4).

67.2.2.4.18 Attach control tube (9) to arm (7). Install one washer under bolt head and one washer under nut. Install cotter pin.

67.2.2.4.19 Check collective rigging (paragraph 67.1.5).

67.2.2.4.20 Functionally check all controls on pilot collective stick.

67.2.2.4.21 Check for free operation of power controls. Check power control rigging (Chapter 76).

67.2.3 Collective Friction Clamp

67.2.3.1 Removal

67.2.3.1.1 Remove left seat and access panel below seat.

67.2.3.1.2 Remove bolt (4, Figure 67-11), washers (3 and 10), and nut (11) attaching clamp halves (5 and 8) to throttle support assembly.

67.2.3.1.3 Remove bolt (1), washers (2), and nut (9).

67.2.3.1.4 Remove bolt (6) and washers (7). Remove two halves of clamp assembly from support.

• COPYRIGHT © 2007 BY DART AEROSPACE LTD. •
THIS DOCUMENT IS PRIVATE AND CONFIDENTIAL AND IS SUPPLIED ON THE EXPRESS CONDITION THAT IT IS NOT TO BE USED FOR ANY PURPOSE OR COPIED OR COMMUNICATED TO ANY OTHER PERSON WITHOUT WRITTEN PERMISSION FROM DART AEROSPACE LTD.

67.2.3.2 Inspection

67.2.3.2.1 Inspect clamp assembly for cracks or deformation. No cracks are allowed. Any deformation which prevents proper operation is cause for rejection.

67.2.3.2.2 Inspect friction lining for obvious wear. Wear which prevents proper operation necessitates replacement of friction liner.

67.2.3.3 Repair

MATERIALS REQUIRED

NUMBER	NOMENCLATURE
C-309	Methyl-Ethyl-Ketone (MEK)
C-363	Adhesive
C-407	Abrasive Pad
C-423	Abrasive Cloth or Paper
C-481	Fabric

67.2.3.3.1 Remove all old liner material and adhesive from clamp halves (5 and 8, Figure 67-11) using 180 grit abrasive cloth or paper (C-423)

67.2.3.3.2 Rinse clamp halves in clean water and dry using clean cloths or a heat gun.

67.2.3.3.3 Cut fabric (C-481) to approximately 1.0 by 3.0 in. (25.4 to 76.2 mm) to match inside areas of clamp halves.

67.2.3.3.4 Lightly abrade dacron surface (pink side) of liner material with 180 grit abrasive cloth or paper (C-423).

NOTE
The dark (teflon) side of the liner material is the friction side.

67.2.3.3.5 Mix adhesive (C-363) according to manufacturers instructions.

NOTE
Pot life of adhesive is 30 minutes at 75°F (24°C).

67.2.3.3.6 Apply adhesive to inner surface of both clamp halves (5 and 8) and to dacron (pink) surface of liner material. Install liner material in clamp halves.

67.2.3.3.7 Install clamp halves (5 and 8) around cylindrical workaid 2.03 to 2.09 in. (51.56 to 53.05 mm) diameter and install bolt (6) and washer (7).

67.2.3.3.8 Install bolt (1), washer (2), and nut (9) through tongues of clamp halves (5 and 8) and tighten nut (9) to 1.0 in.lbs. (0.113 Nm) greater than nut tare torque.

67.2.3.3.9 Remove adhesive squeeze-out. Allow bonding adhesive to cure 24 hours at 75°F (24°C) or heat assembly to 175 to 190°F (80 to 88°C) for one hour.

67.2.3.3.10 After complete curing, remove clamp assembly from work aid and scuff friction surface of liner material with 180 grit abrasive cloth or paper (C-423) followed by an abrasive pad (C-407) until a uniform finish is attained.

67.2.3.3.11 Wash clamp assembly with mild soap and water followed by a rinse of MEK (C-309) to remove all grit and foreign material.

67.2.3.4 Installation

67.2.3.4.1 Place clamp halves around elbow (Figure 67-11).

67.2.3.4.2 Install washer (7) and bolt (6).

67.2.3.4.3 Install bolt (1), washer (2) and nut (9). Tighten nut (9) only enough to hold clamp halves in contact with elbow.

67.2.3.4.4 Align hole in tang on upper clamp half with hole in support and install bolt (4), washers (3 and 10), and nut (11).

67.2.3.4.5 Adjust minimum collective friction (paragraph 67.2.4).

67.2.3.4.6 Install floor access panel and seat.

• COPYRIGHT © 2007 BY DART AEROSPACE LTD. •
THIS DOCUMENT IS PRIVATE AND CONFIDENTIAL AND IS SUPPLIED ON THE EXPRESS CONDITION THAT IT IS NOT TO BE USED FOR ANY PURPOSE OR COPIED OR COMMUNICATED TO ANY OTHER PERSON WITHOUT WRITTEN PERMISSION FROM DART AEROSPACE LTD.

67.2.4 Minimum Collective Friction Adjustment

67.2.4.1 Loosen friction nut (2, Figure 67-9) completely.

67.2.4.2 With hydraulic power on, apply a spring scale at middle within 0.5 in. (12.7 mm)) of upper throttle grip. Check for 8 to 10 lbs. (35.58 to 44.48 N) force required to move stick upward against sliding friction preload.

NOTE

If hydraulic power is not available, adjustment may be checked by disconnecting control tube (9) from arm (7). Scale should indicate 13 to 14 lbs. (57.82 to 62.27 N) sliding friction when stick is moved upward.

67.2.4.3 When adjustment is required, remove access plate from floor at left of copilot seat. Adjust bolt in clamp (13) on jackshaft elbow to obtain proper friction.

67.2.5 Throttle Control Gears Adjustment

MATERIALS REQUIRED

NUMBER	NOMENCLATURE
C-405	Lockwire

NOTE

If throttle controls do not operate smoothly, perform following checks and adjustments (Figure 67-12).

67.2.5.1 Detach control stick boot and remove cover plates for access to throttle control gears at both ends of collective stick and jackshaft assembly.

67.2.5.2 At each end of jackshaft, verify marked tooth of each flex shaft gear is mated in tenth tooth space of gear sector. Also check at each end of travel each gear sector is at least one full tooth from rolling off mating gear.

67.2.5.3 Disconnect control tubes and check for 0.003 to 0.008 in. (0.076 to 0.203 mm) backlash of each gear sector with mating gear, measured at control tube attach point of sector arm in neutral position. With gear sector and flex shaft in neutral position, a pull force of 4.5 lbs. (20.01 N) is maximum allowable.

67.2.5.4 Determine type of spacer installed between throttle gear sectors. If spacer shown in view A is installed, adjust as outlined in step 67.2.5.5. If spacer shown in view B is installed, adjust as outlined in step 67.2.5.6.

67.2.5.5 Adjust gear sector backlash as follows (view A):

67.2.5.5.1 Remove nut, washers, and bolt securing gear sectors and spacer. Remove gear sector, spacers (2) and shims.

67.2.5.5.2 Install gear sector with shims between gear sector and support to provide backlash of 0.003 to 0.008 in. (0.076 to 0.203 mm). Place spacers (2) between gear sector and support and install bolt.

67.2.5.5.3 Measure gap between spacer and gear sector to determine thickness of shim required to provide a snug fit.

67.2.5.5.4 Install shim between spacer and gear sector and install and torque nut 50 to 70 in.lbs. (5.65 to 7.91 Nm).

67.2.5.5.5 Check backlash of each gear sector is 0.003 to 0.008 in. (0.076 to 0.203 mm). With gear sector and flex shaft in a neutral position, check gear sector will move when a maximum force of 4.5 lbs. (20.01 N) is applied at bolt hole with pull applied perpendicular to gear sector. Install cotter pin in nut.

67.2.5.6 Adjust gear sector backlash as follows (view B):

67.2.5.6.1 Remove bolt securing gear sector.

67.2.5.6.2 Remove lockwire and turn nuts of spacer to decrease length of spacer.

• COPYRIGHT © 2007 BY DART AEROSPACE LTD. •
THIS DOCUMENT IS PRIVATE AND CONFIDENTIAL AND IS SUPPLIED ON THE EXPRESS CONDITION THAT IT IS NOT TO BE USED FOR ANY PURPOSE OR COPIED OR COMMUNICATED TO ANY OTHER PERSON WITHOUT WRITTEN PERMISSION FROM DART AEROSPACE LTD.

67.2.5.6.3 Increase or decrease shim between gear sector and support until backlash is 0.003 to 0.008 in. (0.076 to 0.203 mm).

67.2.5.6.4 With gear sector and shim in position, turn nuts of spacer and specer NAS43DD4-56N to increase length until spacer is a snug fit between gear sector.

67.2.5.6.5 Install bolt through gear sector, restrain spacer, and torque 50 to 70 in.lbs. (5.65 to 7.90 Nm).

67.2.5.6.6 Check backlash of gear sector is 0.003 to 0.008 in. (0.0762 to 0.203 mm). With gear sector and flex shaft in a neutral position, check gear sector will move when a maximum force of 4.5 lbs. (20.01 N) is applied at bolt hole with pull applied perpendicular to gear sector.

67.2.5.6.7 Secure nuts of spacer together and bolt to hole in support with lockwire (C-405).

67.2.5.7 Reconnect throttle control tube and verify throttles operate smoothly.

67.2.5.8 Install cover plates and control stick boot.

67.2.6 Miscellaneous Control Components

Linkage between collective control jackshaft and collective sleeve lever on swashplate support consists of push-pull tubes, bellcranks, support, and a dual hydraulic power cylinder.

NOTE

For maintenance practices on copilot collective controls, refer to appropriate Service Instruction.

67.2.6.1 Removal

NOTE

Parts of control system can be removed separately as needed or completely in practical sequence. Take precautions against damage by accidental movement of linkage while disconnected.

67.2.6.1.1 Remove covers and access panels as required.

67.2.6.1.2 Remove nuts, washers and bolts attaching control tube (2 Figure 67-1) to collective lever (1) and universal (3). Remove control tube.

67.2.6.1.3 Remove nuts, washers and bolts attaching control tube (6) to cylinder (5) and bellcrank (8). Remove control tube (6).

67.2.6.1.4 Remove nuts and washers attaching cylinder (5) to support (4). Remove nut, washers and bolt attaching cylinder (5) to support (7). Remove cylinder (5).

67.2.6.1.5 Remove nuts, washers and bolts from each end of support (4) and lift beam. Remove support (4).

67.2.6.1.6 Remove nuts, washers and bolts attaching control tube (9) to bellcrank (8) and lever (10). Remove control tube (9).

67.2.6.1.7 Remove nuts, washers and bolts attaching control tube (11) to lever (10) and control arm (14). Remove control tube (11).

67.2.6.2 Inspection and repair

Inspect and repair collective [pitch control liinkage components (BHT-212-CR&O)

67.2.6.3 Installation

67.2.6.3.1 Install and align control tube (11, Figure 67-1) to lever (10) and control arm (14). Install bolts, washers and nuts. Tighten and install cotter pins.

67.2.6.3.2 Install and align control tube (9) to lever (10) and bellcrank (8); install bolts washers and nuts. Tighten and install cotter pins.

67.2.6.3.3 Install and align control tube (6) to bellcrank (8) and cylinder (5). Install bolts washers and nuts. Tighten and install cotter pins.

• COPYRIGHT © 2007 BY DART AEROSPACE LTD. •
THIS DOCUMENT IS PRIVATE AND CONFIDENTIAL AND IS SUPPLIED ON THE EXPRESS CONDITION THAT IT IS NOT TO BE USED FOR ANY PURPOSE OR COPIED OR COMMUNICATED TO ANY OTHER PERSON WITHOUT WRITTEN PERMISSION FROM DART AEROSPACE LTD.

67.2.6.3.4 Install and position support assembly (4) on lift beam and attaching brackets. Install bolts washers and nuts.

67.2.6.3.5 Install collective hydraulic cylinder (Chapter 29).

67.2.6.3.6 Install and align control tube (2) to collective lever (1) and universal (3). Install bolts washers and nuts. Tighten and install cotter pin.

67.2.6.3.7 Rig collective pitch controls.

67.2.6.3.8 Install panels and covers.

• COPYRIGHT © 2007 BY DART AEROSPACE LTD. •
THIS DOCUMENT IS PRIVATE AND CONFIDENTIAL AND IS SUPPLIED ON THE EXPRESS CONDITION THAT IT IS NOT TO BE USED FOR ANY PURPOSE OR COPIED OR COMMUNICATED TO ANY OTHER PERSON WITHOUT WRITTEN PERMISSION FROM DART AEROSPACE LTD.

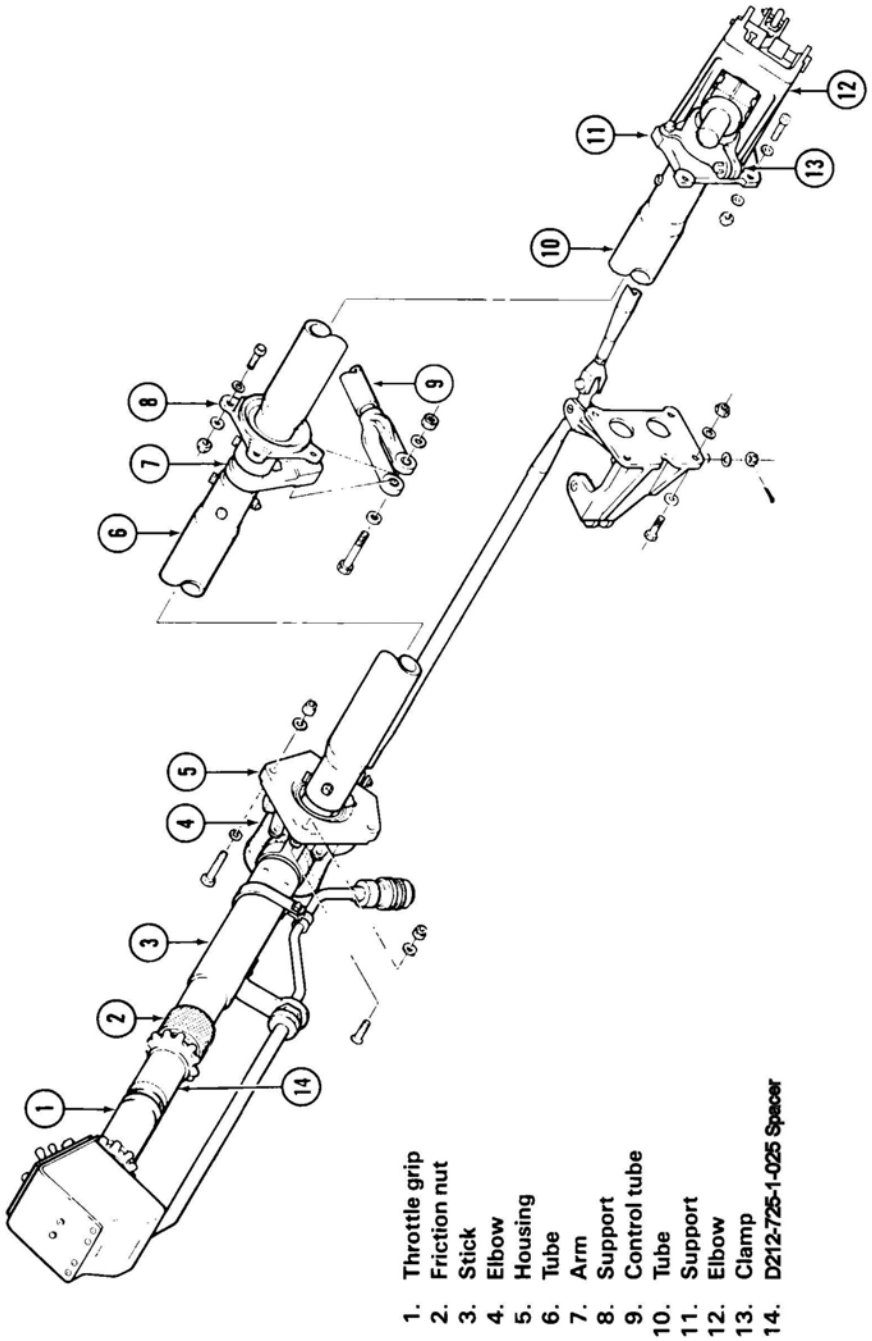

Figure 67-9. Collective Stick and Jackshaft

• COPYRIGHT © 2007 BY DART AEROSPACE LTD. •
THIS DOCUMENT IS PRIVATE AND CONFIDENTIAL AND IS SUPPLIED ON THE EXPRESS CONDITION THAT IT IS NOT TO BE USED FOR ANY PURPOSE OR COPIED OR COMMUNICATED TO ANY OTHER PERSON WITHOUT WRITTEN PERMISSION FROM DART AEROSPACE LTD.

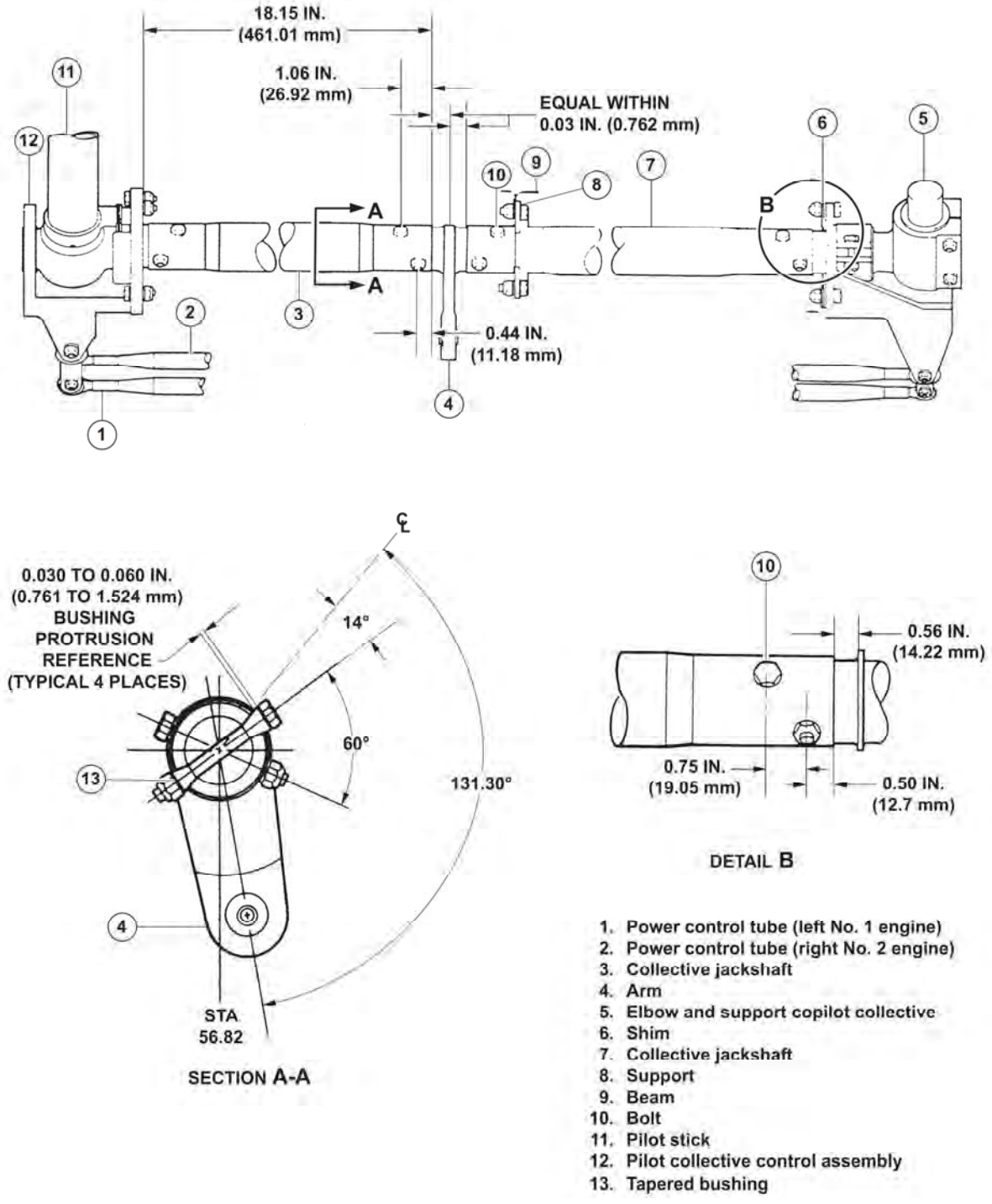

Figure 67-10. Collective Stick and Jackshaft Installation

• COPYRIGHT © 2007 BY DART AEROSPACE LTD. •
THIS DOCUMENT IS PRIVATE AND CONFIDENTIAL AND IS SUPPLIED ON THE EXPRESS CONDITION THAT IT IS NOT TO BE USED FOR ANY PURPOSE OR COPIED OR COMMUNICATED TO ANY OTHER PERSON WITHOUT WRITTEN PERMISSION FROM DART AEROSPACE LTD.

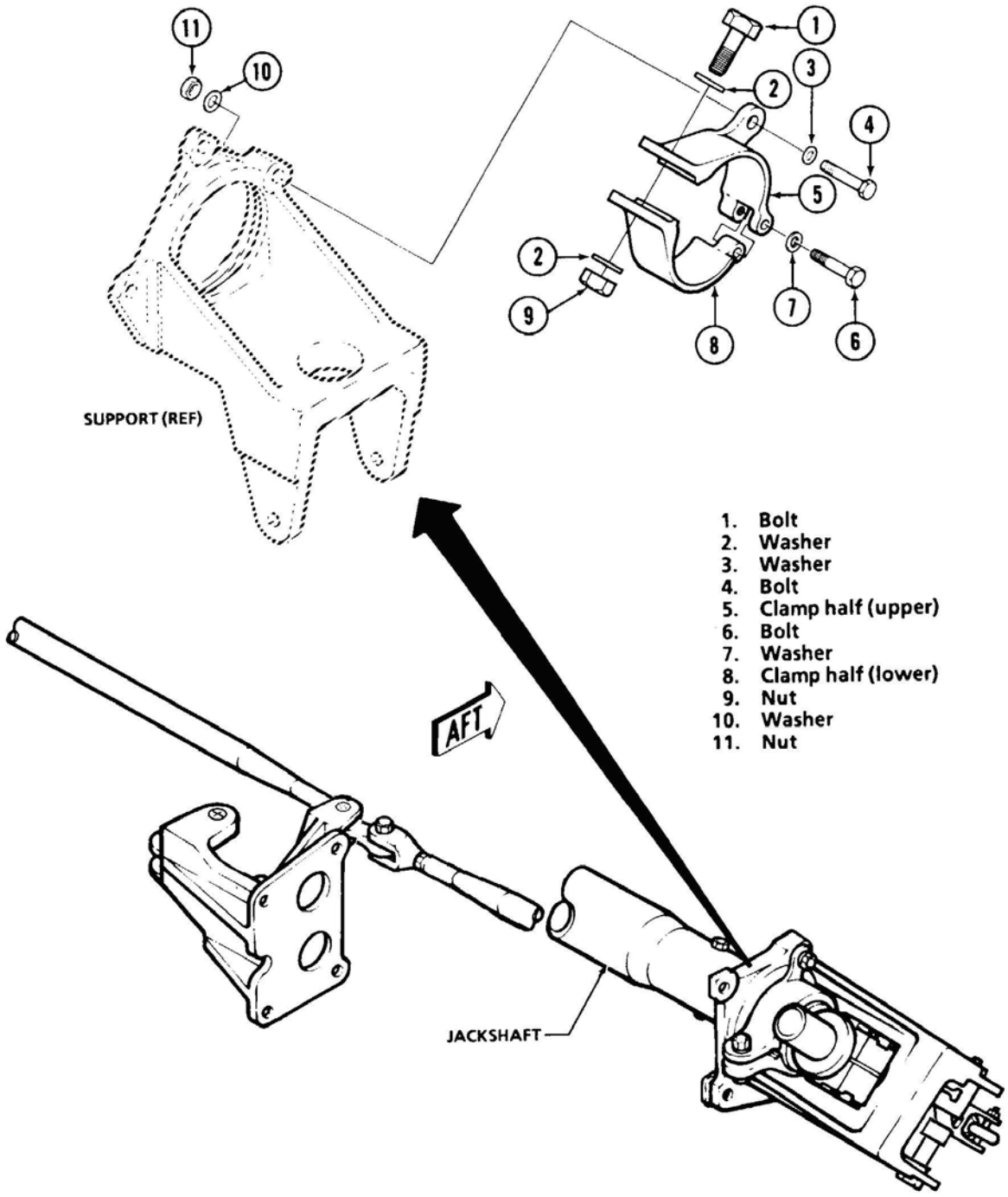

Figure 67-11. Friction Clamp Assembly

• COPYRIGHT © 2007 BY DART AEROSPACE LTD. •
THIS DOCUMENT IS PRIVATE AND CONFIDENTIAL AND IS SUPPLIED ON THE EXPRESS CONDITION THAT IT IS NOT TO BE USED FOR ANY PURPOSE OR COPIED OR COMMUNICATED TO ANY OTHER PERSON WITHOUT WRITTEN PERMISSION FROM DART AEROSPACE LTD.

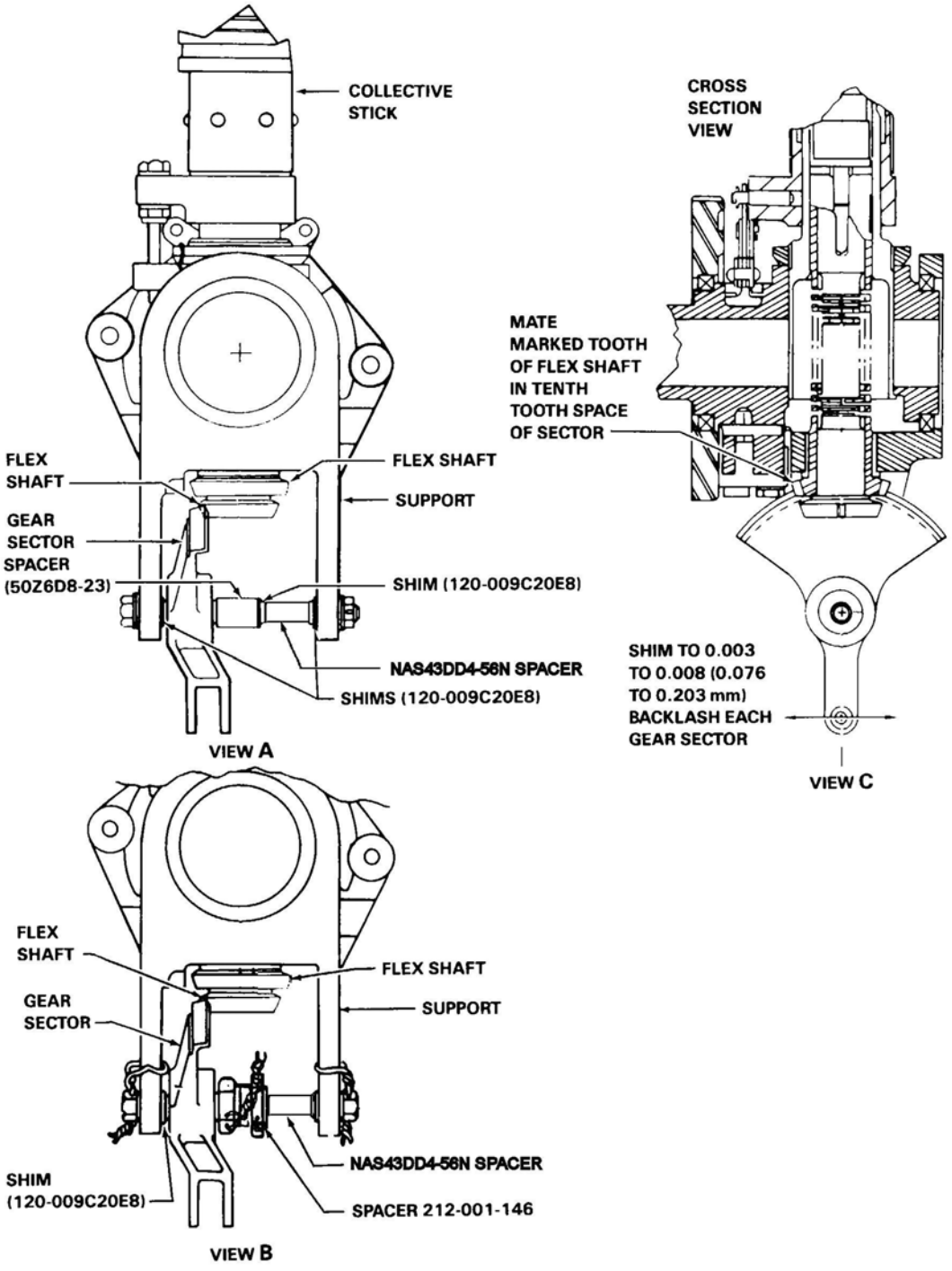

Figure 67-12. Throttle Control Gear Sectors Shimming and Backlash

• COPYRIGHT © 2007 BY DART AEROSPACE LTD. •
THIS DOCUMENT IS PRIVATE AND CONFIDENTIAL AND IS SUPPLIED ON THE EXPRESS CONDITION THAT IT IS NOT TO BE USED FOR ANY PURPOSE OR COPIED OR COMMUNICATED TO ANY OTHER PERSON WITHOUT WRITTEN PERMISSION FROM DART AEROSPACE LTD.

67.3 CYCLIC FLIGHT CONTROLS

67.3.1 Cyclic Controls

The cyclic control system consists of pilots cyclic control stick, push-pull tubes, bellcranks, mixing levers, two dual hydraulic power cylinders, and electrically operated force trim units. Movement of cyclic control stick is transmitted through linkage and hydraulic cylinders to the swashplate. Fore and aft control linkage is separate from lateral control linkage from control stick to mixing levers. Two dual hydraulic power cylinders are incorporated to reduce effort required for control and to reduce feedback forces from main rotor. Two force gradient units, with magnetic brakes, are incorporated for artificial control feel and stabilization of controls. The cyclic control stick is mounted through the floor in front of pilot seat. The cyclic stick has adjustable friction and is equipped with a trigger type intercom and communication switch, a cargo hook release switch, rescue hoist control switch, and a force trim switch.

67.3.2 Cyclic Control Stick

The cyclic control stick is mounted through the floor in front of the pilot seat. The cyclic stick has adjustable friction and is equipped with a trigger type intercom and communication switch, a cargo hook release switch, rescue hoist control switch and a force trim switch.

67.3.2.1 Removal

NOTE

Use this procedure to remove complete stick assembly, including support and lever.

67.3.2.1.1 Remove screws (2, Figure 67-13) and washers to detach boot (3) from floor. Remove boot assembly. Remove access plate on lower skin.

67.3.2.1.2 Disconnect control stick cable plug (10) from receptacle on structure. Detach clamp (4) from structure.

67.3.2.1.3 Disconnect fore-aft and lateral control tube assemblies (5 and 7) from lever, below stick support, by removing bolts (6 and 8).

67.3.2.1.4 Remove four bolts (9) and washers from support. Remove cyclic stick (1) and support assembly.

67.3.2.2 Installation

67.3.2.2.1 Position stick (Figure 67-13) in place. Secure support to structure with four bolts (9) and washers.

67.3.2.2.2 Attach fore-and-aft, and lateral control tube assemblies (5 and 7), to control stick lever with bolts (6 and 8), washers, nuts, and cotter pins.

67.3.2.2.3 Connect and lockwire control stick electrical cable plug (10) to receptacle on structure below floor. Check cable support clamp (4) allows enough slack in cable for full stick travel only.

67.3.2.2.4 Install boot assembly (3) with eight screws (2) with washers. Install access plate on lower skin.

67.3.3 Force Trim

A magnetic brake and force gradient installation is used in each of the two cyclic control systems for stick centering and force trim functions. The brake is secured to airframe structure, and has an arm on its rotary shaft. The arm can be braked and held at any point in its travel by use of a switch on cyclic stick. Brake and force gradient are alike in appearance for lateral and fore-and-aft systems, but are different in position of installation. Lateral force gradient is located behind F.S. 23 bulkhead inboard of left main beam. Fore-and-aft force gradient attaches to left end of cyclic control jackshaft at F.S. 49.5 and extends aft to connect to magnetic brake.

• COPYRIGHT © 2007 BY DART AEROSPACE LTD. •
THIS DOCUMENT IS PRIVATE AND CONFIDENTIAL AND IS SUPPLIED ON THE EXPRESS CONDITION THAT IT IS NOT TO BE USED FOR ANY PURPOSE OR COPIED OR COMMUNICATED TO ANY OTHER PERSON WITHOUT WRITTEN PERMISSION FROM DART AEROSPACE LTD.

67.3.4 Cyclic Control Force Gradient

The force gradient is a link equipped with an internal spring and connects arm of magnetic brake to a lever in fore-and-aft system and a bellcrank in lateral system.

67.3.4.1 Removal

67.3.4.1.1 Remove access panels from cabin floor and from lower fuselage skin as necessary.

67.3.4.1.2 Disconnect link from bellcrank (23, Figure 67-3) in lateral system by removing nut, washers, and bolt.

67.3.4.1.3 Disconnect clevis from lever on cyclic jackshaft (26) in fore-and-aft system by removing bolt.

67.3.4.1.4 Remove spring (35) if installed. Note rigging.

67.3.4.1.5 Remove nut to detach brake from force gradient (18 or 21).

67.3.4.1.6 If force gradient is to be replaced, remove link or clevis for use on replacement.

67.3.4.2 Installation

MATERIALS REQUIRED

NUMBER	NOMENCLATURE
C-405	Lockwire

NOTE

All force gradients are similar in appearance but each installation requires a different part number because of different spring assembly.

67.3.4.2.1 Adjust spring preload on force gradient as follows:

67.3.4.2.1.1 Remove cap (3, Figure 67-14).

67.3.4.2.1.2 Remove spring assembly (1) from housing (2).

67.3.4.2.1.3 Adjust nuts (6) to hold 2.5 to 3.0 lbs. (11.1 to 13.3 N) force against spring (1) on lateral force gradient. Tighten nuts together.

67.3.4.2.1.4 Adjust nuts (6) to hold 5.5 to 6.5 lbs. (24.5 to 29.0 N) force against spring assembly (1) on fore-and-aft force gradient. Tighten nuts together.

67.3.4.2.1.5 Insert spring assembly (1) into housing (2) and install cap (3) and tighten until all noticeable end play is eliminated. Secure with lockwire (C-405) as shown to prevent turning in either direction.

67.3.4.2.2 Install spring (35, Figure 67-3) as required.

67.3.4.2.3 Adjust and connect force trim in accordance with cyclic controls rigging procedure (paragraph 67.1.6 or 67.1.7).

67.3.4.2.4 Install access panels on cabin floor and lower fuselage skin.

67.3.5 Magnetic Brake

Two magnetic brakes are used with force gradient assemblies for stick centering and force trim in fore-and-aft and lateral cyclic control linkage. The brake assemblies are identical to each other except for position of arm on brake and position of mounting on structure.

67.3.5.1 Removal

67.3.5.1.1 Remove access panels from cabin floor and from lower fuselage skin as necessary.

67.3.5.1.2 Disconnect force gradient from arm of magnetic brake.

67.3.5.1.3 Disconnect electrical plug from magnetic brake (17 or 20, Figure 67-3). Note rigging of spring (35) in plate (34) if installed. Remove spring (35) and four bolts with washers.

• COPYRIGHT © 2007 BY DART AEROSPACE LTD. •
THIS DOCUMENT IS PRIVATE AND CONFIDENTIAL AND IS SUPPLIED ON THE EXPRESS CONDITION THAT IT IS NOT TO BE USED FOR ANY PURPOSE OR COPIED OR COMMUNICATED TO ANY OTHER PERSON WITHOUT WRITTEN PERMISSION FROM DART AEROSPACE LTD.

Lift magnetic brake from helicopter.

67.3.5.1.4 If force gradient is to be replaced, remove arm for use on replacement.

67.3.5.2 Installation

MATERIALS REQUIRED	
NUMBER	**NOMENCLATURE**
C-405	Lockwire

67.3.5.2.1 Install arm on magnetic brake as follows:

67.3.5.2.1.1 Align arm on magnetic brake (20, Figure 67-3) so **L** is next to mark on shaft (view C). Tighten attaching bolt.

67.3.5.2.1.2 Align arm on magnetic brake (17) so **F** is next to mark on shaft (view B). Tighten attaching bolt.

67.3.5.2.1.3 Attach magnetic brake to structure by installing four bolts with washers and install spring (35) if required. Attach electrical plug to magnetic brake and secure with lockwire (C-405).

67.3.5.2.1.4 Attach magnetic brake (17 and 20) to force gradient (18 and 21) by installing nut and cotter pin.

67.3.5.2.1.5 Adjust and connect force trim in accordance with cyclic controls rigging procedure (paragraph 67.1.6 or 67.1.7).

NOTE

Check clearance between force gradient and structure at extreme positions of magnetic brake arm. Re-index arm relative to shaft by one serration, if required for clearance, then repeat, paragraph 67.1.6, step 67.6.11 or paragraph 67.1.7, step 67.1.7.11.

67.3.5.2.1.6 Install access panels on cabin floor and lower fuselage skin.

67.3.6 Miscellaneous Control Components

Cyclic control components include push-pull tubes, bellcranks, jackshaft, mixing lever, and supports.

NOTE

For maintenance practices on cyclic controls dual control kit, refer to appropriate Service Instruction.

67.3.6.1 Removal

NOTE

Parts of control system can be removed separately as need occurs, or completely in any practical sequence. Take precautions against damage by accidental movement of linkage while disconnected.

67.3.6.1.1 Remove access covers on cabin floor, front of pylon island, and lower skin of fuselage, as required.

67.3.6.1.2 Disconnect control tubes (22 and 24 Figure 67-3) from pilot cyclic stick (25).

67.3.6.1.3 To remove the bellcrank assembly (23), proceed as follows:

67.3.6.1.3.1 Disconnect the control tubes (22 and 27), force gradient (21) and transducer (36).

67.3.6.1.3.2 Remove the cotter pin (46), bolt (43) washers (44) and nut (45) from bellcrank assembly (23). Discard cotter pin.

67.3.6.1.3.3 Remove the bellcrank assembly (23) for the support assembly (37).

67.3.6.1.4 To remove the support assembly (37), remove the bolts (38), washers (39) and nuts (40).

67.3.6.1.5 When removal of cyclic jackshaft (26) is required, remove bolts and tapered bushings to separate jackshaft tubes

• COPYRIGHT © 2007 BY DART AEROSPACE LTD. •
THIS DOCUMENT IS PRIVATE AND CONFIDENTIAL AND IS SUPPLIED ON THE EXPRESS CONDITION THAT IT IS NOT TO BE USED FOR ANY PURPOSE OR COPIED OR COMMUNICATED TO ANY OTHER PERSON WITHOUT WRITTEN PERMISSION FROM DART AEROSPACE LTD.

from each side of control lever. Remove each jackshaft by removing four bolts attaching bearing housing to beam, withdrawing assembly through access opening inside of cabin lower skin.

67.3.6.1.6 Disconnect control tubes from mixing lever (28) bellcranks (8 and 15).

67.3.6.1.7 Remove bellcranks from or with supports as required.

67.3.6.1.8 Remove either hydraulic cylinder (7 or 14).

67.3.6.1.9 Remove cylinder support (6) and support (13)

67.3.6.1.10 Remove cyclic mixing levers (Figure 67-15).

67.3.6.2 Inspection

67.3.6.2.1 Inspect cyclic control jackshaft components (BHT-212-CR&O).

67.3.6.2.2 Inspect bearings of cyclic control jackshaft components for secure installation and serviceability (BHT-ALL-SPM).

67.3.6.2.3 Inspect cyclic control bellcranks, mixing lever, supports, and control tubes (BHT-212-CR&O).

67.3.6.2.4 Check balance spring (2, Figure 67-3) for security, distortion and excessive length. Spring should be approximately 9.41 in. (239.01 mm) long, with a spring rate of 20 lbs. (89.0 N) per inch (25.4 mm).

67.3.6.2.5 On helicopter S/N 30850 and sub., check spring (35, Figure 67-3) for security, distortion, and excessive length. Spring should be approximately 7.6 in. (193.04 mm) long, with a spring rate of 2.3 lbs. (10.2 N) per inch (25.4 mm).

67.3.6.2.6 The maximum allowable lateral movement on cyclic jackshaft (26) is 0.20 in. (5.08 mm) (Figure 67-16).

67.3.6.3 Repair

MATERIALS REQUIRED

NUMBER	NOMENCLATURE
C-423	Abrasive Paper or Cloth

NOTE

Check rigging and proper operation of system after removal and installation of any parts.

67.3.6.3.1 Polish out mechanical damage to cyclic control jackshaft components with 400 grit or finer abrasive cloth or paper (C-423) to obtain a smooth, scratch-free surface. Refinish component to original finish (BHT-ALL-SPM).

67.3.6.3.2 Remove corrosion from cyclic control jackshaft components (BHT-ALL-SPM) and refinish component to original finish.

67.3.6.3.3 Replace unserviceable bearings of cyclic control jackshaft components (BHT-ALL-SPM).

67.3.6.3.4 Repair cyclic control bellcranks, mixing lever, supports, and control tubes (BHT-212-CR&O).

67.3.6.4 Installation

NOTE

If a support assembly (37, Figure 67-3) is being replaced, the upper bearing (42) will not be installed or supplied with the new support.

This is to make sure the bearing inner race touches the bellcrank bushing after ring staking the sleeve. If support assembly is replaced, do the following step.

67.3.6.4.1 Temporarily put the bellcrank assembly (23) into the support assembly (37) and put the new upper bearing (42) in position on the support assembly.

67.3.6.4.2 Ring stake the sleeve (41) to secure the upper bearing (42) in place (BHT-ALL-SPM, Chapter 9).

• COPYRIGHT © 2007 BY DART AEROSPACE LTD. •
THIS DOCUMENT IS PRIVATE AND CONFIDENTIAL AND IS SUPPLIED ON THE EXPRESS CONDITION THAT IT IS NOT TO BE USED FOR ANY PURPOSE OR COPIED OR COMMUNICATED TO ANY OTHER PERSON WITHOUT WRITTEN PERMISSION FROM DART AEROSPACE LTD.

67.3.6.4.3 Install the support assembly (37) on the airframe with bolts (38), washers (39) and nuts (40). Torque the nuts.

67.3.6.4.4 Install the bellcrank (23), bolt (43), washers (44), nut (45) and new cotter pin (46) on the support assembly (37).

67.3.6.4.5 Connect the control tubes (22 and 27), force gradient (21) and transducer (36) on the bellcrank assembly (23).

67.3.6.4.6 Connect the control tubes (22 and 24) on the pilot cyclic stick (25).

67.3.6.4.7 Install bellcranks (8 and 15) if removed. Assemble and install mixing lever assembly (Figure 67-15).

67.3.6.4.8 Install cyclic jackshaft (26, Figure 67-3), if removed.

67.3.6.4.9 Insert right and left tube assemblies, with bearings and supports in place, through access openings at sides of cabin lower skin. Slip ends of tubes on stub shafts of control arm. Align bolt holes with center arm pointing up and end arms down, and install bolts and tapered bushings.

67.3.6.4.10 Secure right and left bearing supports to each beam by installing four bolts with nuts and washers. Check for free operation.

67.3.6.4.11 Install and attach all fixed-length control tubes. If adjustable control tubes are not correct length to be attached. Leave one end free until controls are rigged.

67.3.6.4.12 Install supports (6) and support (13).

67.3.6.4.13 Install hydraulic cylinders (7 and 14).

67.3.6.4.14 Complete connection of linkage while rigging control system.

67.3.7 Cyclic Jackshaft

67.3.7.1 Replacement of cyclic jackshaft

MATERIALS REQUIRED

NUMBER	NOMENCLATURE
C-204	Primer

SPECIAL TOOLS REQUIRED

NUMBER	NOMENCLATURE
T-27872-11	Reamer

67.3.7.1.1 Remove access covers on cabin floor and lower skin of fuselage, as required.

67.3.7.1.2 Disconnect control tubes (1, 2 and 3, Figure 67-16) from jackshaft. Disconnect force gradient (4) from cyclic jackshaft.

67.3.7.1.3 Remove bolts and tapered bushings to separate jackshaft tubes from each side of control lever. Remove each jackshaft by removing four bolts attaching bearing housing to beam, withdraw assembly through access opening of cabin lower skin.

67.3.7.1.4 Assemble arm assembly (9), arm assembly (8) and tube assembly (10).

67.3.7.1.5 Clamp jackshaft in a suitable holding fixture with arm assemblies (9 and 11) down 90° and arm assembly (8) up and aft 6°.

67.3.7.1.6 Hold dimensions as shown on Figure 67-16.

67.3.7.1.7 Drill through tube assembly and arm assembly with a No. F (0.257 in. or 6.53 mm) drill.

67.3.7.1.8 Insert T-27872-11 reamer so end of pilot projects through parts to be reamed.

67.3.7.1.9 Ream one side (smooth finish).

67.3.7.1.10 Install tapered bushing. Ream opposite hole using tapered bushing to support reamer pilot.

• COPYRIGHT © 2007 BY DART AEROSPACE LTD. •
THIS DOCUMENT IS PRIVATE AND CONFIDENTIAL AND IS SUPPLIED ON THE EXPRESS CONDITION THAT IT IS NOT TO BE USED FOR ANY PURPOSE OR COPIED OR COMMUNICATED TO ANY OTHER PERSON WITHOUT WRITTEN PERMISSION FROM DART AEROSPACE LTD.

67.3.7.1.11 Disassemble and remove burrs and metal particles.

67.3.7.1.12 Install tapered bushing and secure with bolt, washer and nut (7).

NOTE

After torquing bolt (7), the washer must be held off the surface of jackshaft tube within limits given in Figure 67-16, detail A.

67.3.7.1.13 Repeat steps 67.3.7.1.7 through 67.3.7.1.11 for remaining holes.

67.3.7.1.14 Apply primer (C-204) to all raw metal.

67.3.7.1.15 Insert right and left tube assemblies, with bearings and supports in place, through access openings at sides of cabin lower skin. Slip ends of tubes on stub shafts of control arm. Align bolt holes with center arm pointing up and end arms down, and install bolts and tapered bushings. Secure right and left housing assemblies (5 and 6) to each beam with four bolts, washers and nuts. Check for free operation.

67.3.7.1.16 Connect control tubes (1, 2 and 3) to jackshaft

67.3.7.1.17 Connect force gradient (4) to jackshaft. Check rigging (paragraph 67.1.6 or 67.1.7).

• COPYRIGHT © 2007 BY DART AEROSPACE LTD. •
THIS DOCUMENT IS PRIVATE AND CONFIDENTIAL AND IS SUPPLIED ON THE EXPRESS CONDITION THAT IT IS NOT TO BE USED FOR ANY PURPOSE OR COPIED OR COMMUNICATED TO ANY OTHER PERSON WITHOUT WRITTEN PERMISSION FROM DART AEROSPACE LTD.

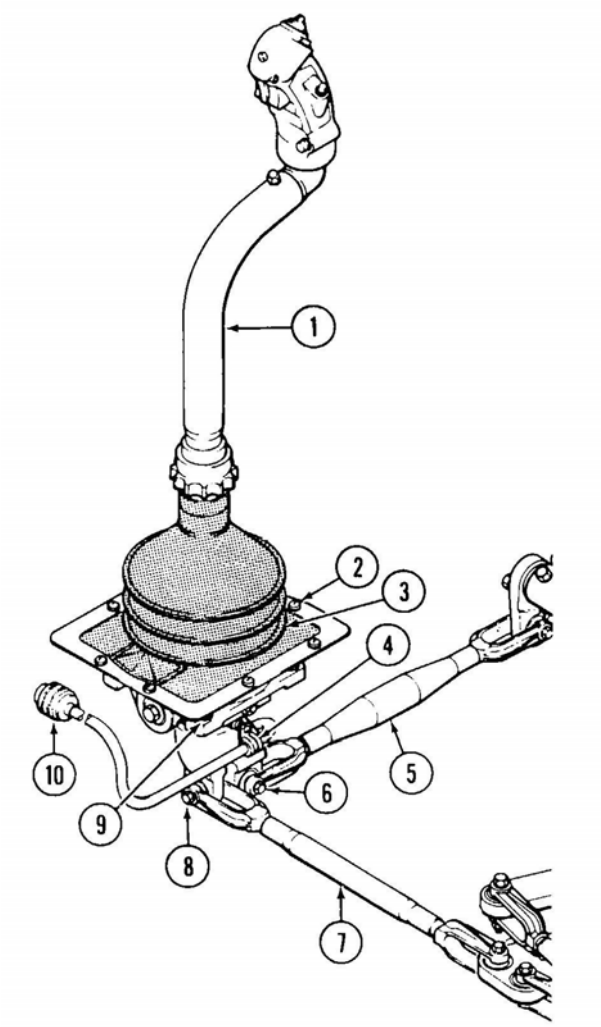

1. Cyclic stick
2. Screw
3. Boot
4. Clamp
5. Tube assembly (fore-and-aft)
6. Bolt
7. Tube assembly (lateral)
8. Bolt
9. Bolt
10. Cable plug

Figure 67-13. Cyclic Control Stick

• COPYRIGHT © 2007 BY DART AEROSPACE LTD. •
THIS DOCUMENT IS PRIVATE AND CONFIDENTIAL AND IS SUPPLIED ON THE EXPRESS CONDITION THAT IT IS NOT TO BE USED FOR ANY PURPOSE OR COPIED OR COMMUNICATED TO ANY OTHER PERSON WITHOUT WRITTEN PERMISSION FROM DART AEROSPACE LTD.

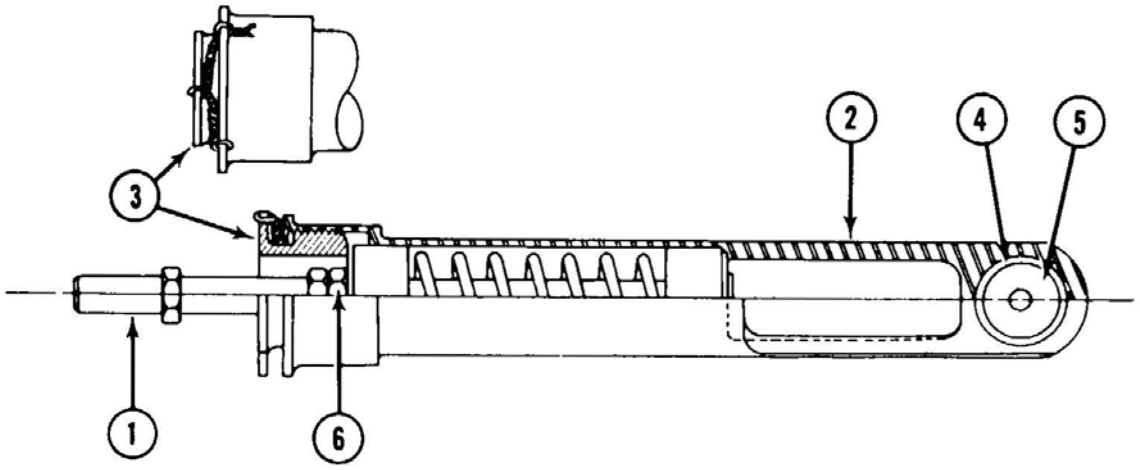

1. Spring assembly
2. Housing
3. Cap
4. Sleeve
5. Bearing
6. Nuts

Figure 67-14. Force Gradient

• COPYRIGHT © 2007 BY DART AEROSPACE LTD. •
THIS DOCUMENT IS PRIVATE AND CONFIDENTIAL AND IS SUPPLIED ON THE EXPRESS CONDITION THAT IT IS NOT TO BE USED FOR ANY PURPOSE OR COPIED OR COMMUNICATED TO ANY OTHER PERSON WITHOUT WRITTEN PERMISSION FROM DART AEROSPACE LTD.

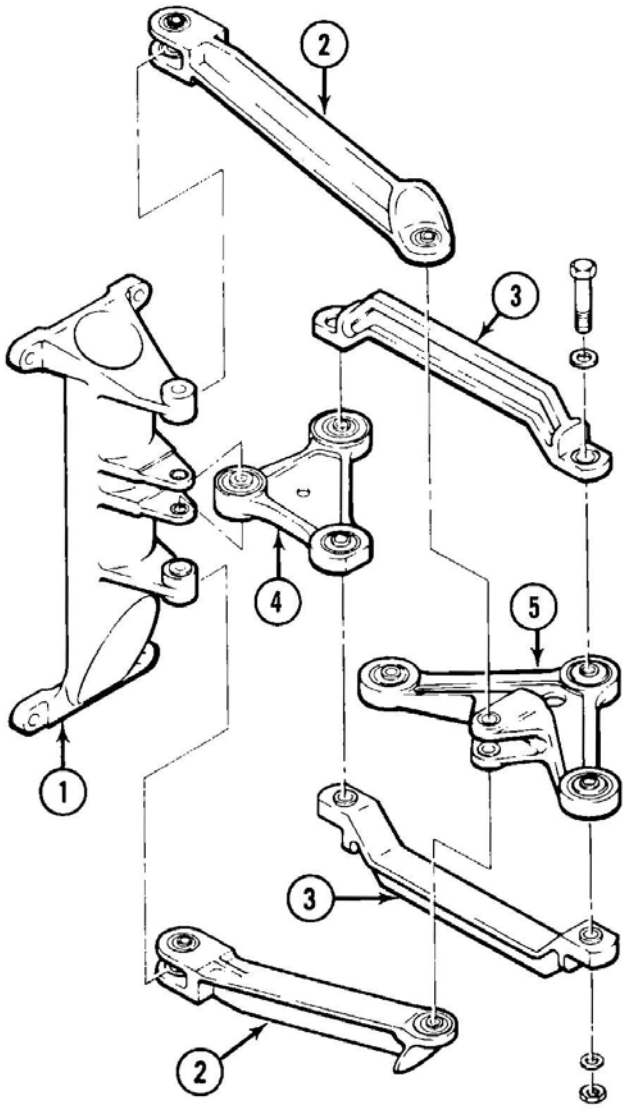

1. Support
2. Matched Links
3. Matched Links
4. Bellcrank
5. Bellcrank

Figure 67-15. Cyclic Control Mixing Lever Assembly

• COPYRIGHT © 2007 BY DART AEROSPACE LTD. •
THIS DOCUMENT IS PRIVATE AND CONFIDENTIAL AND IS SUPPLIED ON THE EXPRESS CONDITION THAT IT IS NOT TO BE USED FOR ANY PURPOSE OR COPIED OR COMMUNICATED TO ANY OTHER PERSON WITHOUT WRITTEN PERMISSION FROM DART AEROSPACE LTD.

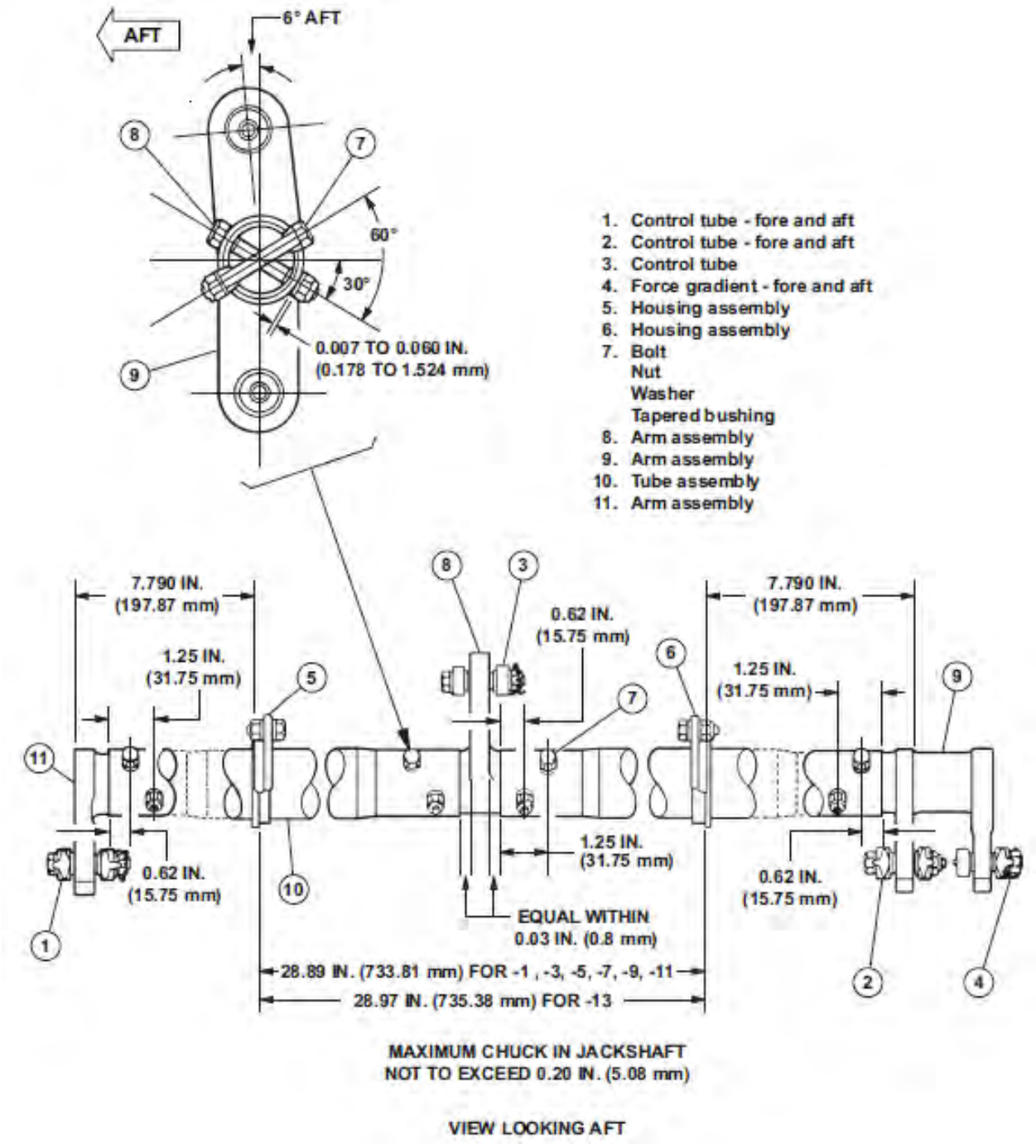

Figure 67-16. Cyclic Jackshaft

• COPYRIGHT © 2007 BY DART AEROSPACE LTD. •
THIS DOCUMENT IS PRIVATE AND CONFIDENTIAL AND IS SUPPLIED ON THE EXPRESS CONDITION THAT IT IS NOT TO BE USED FOR ANY PURPOSE OR COPIED OR COMMUNICATED TO ANY OTHER PERSON WITHOUT WRITTEN PERMISSION FROM DART AEROSPACE LTD.

67.4 ANTI-TORQUE CONTROL

67.4.1 Anti-Torque Control System

67.4.2 Anti-Torque Controls

The anti-torque control system. includes control pedals, pedal adjusters, a force gradient (centering spring) assembly with an electrically operated magnetic brake, a hydraulic power cylinder, and connecting linkage. Actuation of pedals causes a power-assisted pitch change of tail rotor blades to offset main rotor torque and control directional heading of helicopter. Refer to appropriate Service Instruction for maintenance practices on copilot dual controls kit.

67.4.3 Minimum Friction Adjustment

NOTE
Helicopter S/N 30850 and subsequent require minimum friction adjustment.

67.4.3.1 Disconnect force gradient (31, Figure 67-5) from pedal adjuster (28). Disconnect control tube (25) from walking beam (26).

67.4.3.2 Adjust friction screw (35) in friction clamp (34) until a force of 4.25 to 4.75 lbs. (18.9 to 21.1 Nm) is measured at pedals moving through neutral position.

67.4.3.3 Install force gradient (31) and control tube (25).

67.4.4 Pedals and Adjuster

A set of control pedals, supported on forward bulkhead, is connected under cabin floor to adjuster assembly. Adjuster is a bellcrank assembly with a knob on the floor for manual adjustment of pedal position according to pilot need. Force gradient and control linkage to power cylinder are connected to a bellcrank on pilot adjuster.

67.4.4.1 Removal

67.4.4.1.1 Remove pilot seat.

67.4.4.1.2 Remove flight control access doors.

67.4.4.1.3 Remove nuts, washers and bolts from control tube (33, Figure 67-5). Remove control tube (33).

67.4.4.1.4 Remove four bolts attaching pedal support to bulkhead. Remove pedals and support.

67.4.4.1.5 Remove nut, washer and bolt from forward end of control tube (27) and force gradient (31).

67.4.4.1.6 Remove two bolts and washers. Remove adjuster knob (33).

67.4.4.1.7 Remove four nuts, washers and bolts attaching tail rotor control pedal adjuster (28) to bulkhead. Remove pedal adjuster (28).

67.4.4.2 Installation

MATERIALS REQUIRED

NUMBER	NOMENCLATURE
C-200	Putty
C-201	Primer

67.4.4.2.1 Apply a coat of putty (C-200) to mounting surface of tail rotor control pedal adjuster, position on bulkhead, install bolts and washers. Torque nuts 50 to 70 in.lbs. (5.65 to 7.91 Nm).

67.4.4.2.2 Position adjuster knob (29, Figure 67-5) in slots of tail rotor control pedal adjustor, install washers and bolts. Torque 20 to 25 in.lbs. (2.26 to 2.82 Nm).

67.4.4.2.3 Position forward end of control tube (27) and force gradient (31) on tail rotor control adjuster, install bolts, washers and nuts. Torque nuts 30 to 40 in.lbs. (3.39 to 4.52 Nm)

• COPYRIGHT © 2007 BY DART AEROSPACE LTD. •
THIS DOCUMENT IS PRIVATE AND CONFIDENTIAL AND IS SUPPLIED ON THE EXPRESS CONDITION THAT IT IS NOT TO BE USED FOR ANY PURPOSE OR COPIED OR COMMUNICATED TO ANY OTHER PERSON WITHOUT WRITTEN PERMISSION FROM DART AEROSPACE LTD.

and secure with cotter pins.

67.4.4.2.4 Apply a coat of primer (C-201) to mounting surface of pedal support, position on bulkhead with the word TOP up. Install four bolts and washers. Torque 30 to 40 in.lbs. (3.39 to 4.52 Nm).

67.4.4.2.5 Position control tubes (33) on pedals. Install bolts, washers and nuts. Torque nuts 30 to 40 in.lbs. (3.39 to 4.52 Nm) and secure with cotter pins.

67.4.4.2.6 Install flight control access doors.

67.4.4.2.7 Install pilot seat.

67.4.4.2.8 Perform rigging and operational check (paragraph 67.1.4).

67.4.5 Force Trim

A magnetic brake and force gradient installation is used for control centering and force trim. An arm on a rotary shaft can be braked and held at any point in arc of travel by use of a switch on cyclic stick. The force gradient is a link equipped with an internal spring, and connects brake arm to center hole in aft bellcrank on pilot pedal adjuster. Brake and force gradient are like units used in cyclic system but are different in position of installation. Brake is mounted on forward side of F.S. 63.33 bulkhead at approximately right B.L. 20 and force gradient extends forward.

67.4.6 Force Gradient

67.4.6.1 Removal

67.4.6.1.1 Remove pilot seat.

67.4.6.1.2 Remove access panels from cabin floor as necessary.

67.4.6.1.3 Disconnect forward end of force gradient (31, Figure 67-5) from pedal adjuster (28).

67.4.6.1.4 Remove nut from stud on magnetic brake arm and remove force gradient.

67.4.6.2 Installation

MATERIALS REQUIRED

NUMBER	NOMENCLATURE
C-405	Lockwire

CAUTION

ALL FORCE GRADIENTS ARE SIMILAR IN APPEARANCE, BUT EACH INSTALLATION REQUIRES A DIFFERENT PART NUMBER BECAUSE OF DIFFERENT SPRING ASSEMBLY.

67.4.6.2.1 Adjust spring preload on force gradient, if required, as follows:

67.4.6.2.1.1 Remove cap (3, Figure 67-14).

67.4.6.2.1.2 Adjust nuts (6) to hold 2.5 to 3 lbs. (11.1 to 13.3 N) force against spring assembly (1). Tighten nuts together.

67.4.6.2.1.3 Insert spring assembly (1) into housing (2) and install cap (3) until all noticeable end play is eliminated. Secure cap with lockwire (C-405) as shown to prevent turning either direction.

67.4.6.2.2 Place aft end of force gradient over stud on magnetic brake arm. Secure with washer, nut and cotter pin.

67.4.6.2.3 Adjust length of force gradient (paragraph 67.1.6 or 67.1.7) and connect to pedal adjuster (28, Figure 67-5). Install cotter pin.

67.4.6.2.4 Install cabin floor access panel.

67.4.6.2.5 Install pilot seat.

• COPYRIGHT © 2007 BY DART AEROSPACE LTD. •
THIS DOCUMENT IS PRIVATE AND CONFIDENTIAL AND IS SUPPLIED ON THE EXPRESS CONDITION THAT IT IS NOT TO BE USED FOR ANY PURPOSE OR COPIED OR COMMUNICATED TO ANY OTHER PERSON WITHOUT WRITTEN PERMISSION FROM DART AEROSPACE LTD.

67.4.7 Magnetic Brake

67.4.7.1 Removal

67.4.7.1.1 Remove pilot seat.

67.4.7.1.2 Remove access panels from cabin floor, as necessary.

67.4.7.1.3 Remove aft end of force gradient from arm of magnetic brake.

67.4.7.1.4 Disconnect electrical plug from magnetic brake.

67.4.7.1.5 Remove four bolts with washers and lift assembly from helicopter.

67.4.7.1.6 Remove arm from magnetic brake.

67.4.7.2 Installation

MATERIALS REQUIRED

NUMBER	NOMENCLATURE
C-405	Lockwire

67.4.7.2.1 Align arm on magnetic brake shaft so that the **D** is next to mark on shaft. Tighten arm attaching bolt.

67.4.7.2.2 Position magnetic brake in helicopter and secure magnetic brake to bulkhead with four bolts and washers.

67.4.7.2.3 Connect electrical plug to magnetic brake. Secure connector with lockwire (C-405)

67.4.7.2.4 Check rigging of magnetic brake and force gradient in accordance with paragraph 67.1.6 or 67.1.7 and connect force gradient to magnetic brake. Install cotter pin.

67.4.7.2.5 Install cabin floor access panel.

67.4.7.2.6 Install pilot seat.

67.4.8 Miscellaneous Control Components

Control components between tail rotor control pedals and pitch change mechanism mounted on tail rotor gearbox includes control tubes, bellcranks, levers, a walking beam, a force gradient with magnetic brake and a hydraulic power cylinder.

67.4.8.1 Removal

NOTE

Parts of control system can be removed separately as need arises, or completely in any practical sequence. Take precaution against damage by accidental movement of linkage while disconnected.

67.4.8.1.1 Remove access covers on cabin floor and lower skin of fuselage and tailboom as necessary.

NOTE

Remove tail rotor gearbox prior to removing control tube (8, Figure 67-5).

67.4.8.1.2 Remove control tubes, bellcranks, levers and walking beam by removing attaching hardware.

67.4.8.2 Inspection and repair

67.4.8.2.1 Inspect linkage parts for wear, elongated bolt holes, cracks, nicks, and damage. Inspect bearings for wear and roughness.

NOTE

Maximum allowable elongation to a bushing or clevis hole in the control system is 0.003 in. (0.076 mm).

67.4.8.2.2 Inspect control tubes for wear and damage (BHT-212-CR&O).

• COPYRIGHT © 2007 BY DART AEROSPACE LTD. •
THIS DOCUMENT IS PRIVATE AND CONFIDENTIAL AND IS SUPPLIED ON THE EXPRESS CONDITION THAT IT IS NOT TO BE USED FOR ANY PURPOSE OR COPIED OR COMMUNICATED TO ANY OTHER PERSON WITHOUT WRITTEN PERMISSION FROM DART AEROSPACE LTD.

67.4.8.3 Installation

MATERIALS REQUIRED

NUMBER	NOMENCLATURE
C-101	Corrosion Preventive Compound

CAUTION

ENSURE CORROSION PREVENTIVE COMPOUND (C-101) IS NOT ALLOWED ON FAYING SURFACES OF FRICTION CLAMP (34, FIGURE 67-5) AND LEVER (26).

67.4.8.3.1 Apply corrosion preventive compound (C-101) to bolts shown in Figure 67-17 prior to installing.

67.4.8.3.2 Install control tubes, bellcranks, levers, and walking beam by installing attaching hardware.

67.4.8.3.3 Install lever (17, Figure 67-5) in support (19). If lever has side play in support (19), a maximum of two shim washers (18) may be used, one each side of lever (17). One shim washer (18) may be used on one side only.

67.4.8.3.4 Place washer (21) on bolt (20). Install bolt (20) through support (19) and lever (17). Install washer (22) and nut (23). Install cotter pin (24).

67.4.8.3.5 When installing hydraulic power cylinder, install bolts with heads inboard.

67.4.8.3.6 Install boot on control tube (25) with aft edge of clamp positioned 4.5 in. (114.3 mm) aft of F.S. 123.0 bulkhead with pedals in neutral.

67.4.8.3.7 Install tail rotor gearbox, if removed.

67.4.8.3.8 Rig anti-torque controls (paragraph 67.1.4).

• COPYRIGHT © 2007 BY DART AEROSPACE LTD. •
THIS DOCUMENT IS PRIVATE AND CONFIDENTIAL AND IS SUPPLIED ON THE EXPRESS CONDITION THAT IT IS NOT TO BE USED FOR ANY PURPOSE OR COPIED OR COMMUNICATED TO ANY OTHER PERSON WITHOUT WRITTEN PERMISSION FROM DART AEROSPACE LTD.

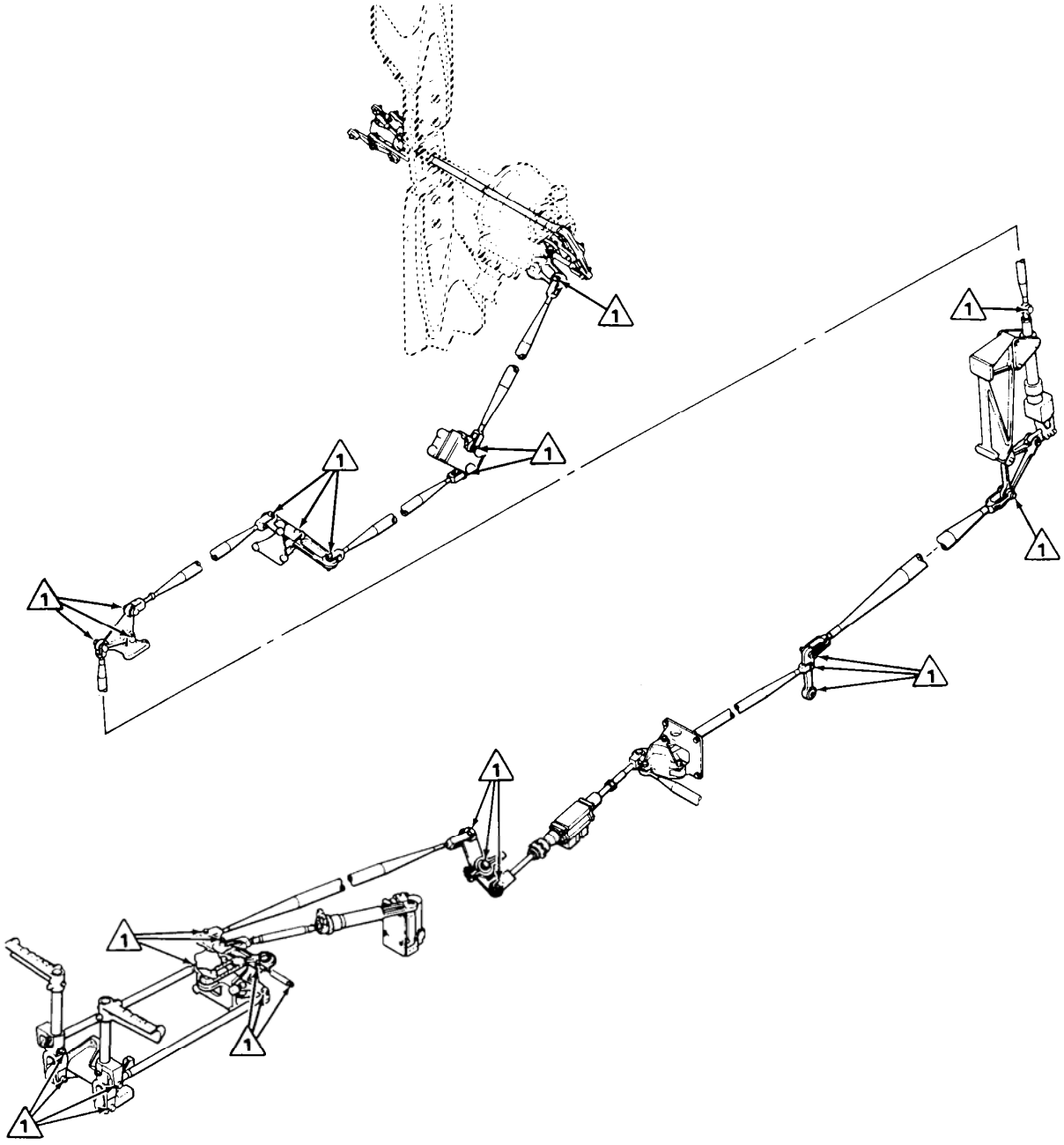

NOTE

1 **Bolts to be installed with corrosion preventive compound (C-101).**

Figure 67-17. Anti-Torque Control Pivot Bolts

• COPYRIGHT © 2007 BY DART AEROSPACE LTD. •
THIS DOCUMENT IS PRIVATE AND CONFIDENTIAL AND IS SUPPLIED ON THE EXPRESS CONDITION THAT IT IS NOT TO BE USED FOR ANY PURPOSE OR COPIED OR COMMUNICATED TO ANY OTHER PERSON WITHOUT WRITTEN PERMISSION FROM DART AEROSPACE LTD.

CHAPTER 67 – FLIGHT CONTROLS (67-00-00)

67.5 SYNCHRONIZED ELEVATOR

67.5.1 Synchronized Elevator

The synchronized elevator consists of two elevators, one on each side of tailboom (Figure 67-18). Each elevator is a horizontal airfoil section built up on a spar tube which is inserted into a projecting end of a horn assembly and secured by two bolts. The horn assembly is installed horizontally through sides of the tailboom and is secured to the structure by supports which serve as bearings for rotational movement. A control arm on the horn provides attachment for linkage from the fore-and-aft cyclic control system at the swashplate.

67.5.2 Maintenance

67.5.2.1 Removal

Remove either synchronized elevator assembly as follows:

67.5.2.1.1 Remove access door from bottom of tailboom below elevator.

67.5.2.1.2 Remove cotter pin (15, Figure 67-18), nut (14), washers (13), and bolt (12).

67.5.2.1.3 Remove special retaining bolt (2), with washer, to detach elevator fitting from lug (4) on horn assembly (5).

67.5.2.1.4 Withdraw elevator straight outboard until spar tube (3) is pulled free from horn assembly (5).

67.5.2.1.5 If horn (5) is to be removed, proceed as follows:

67.5.2.1.5.1 Disconnect control tube assembly from arm (6) on horn assembly.

67.5.2.1.5.2 At each end of horn assembly (inside tailboom) remove two bolts with nuts, washers, and shims (8) which attach upper and lower retainers (7).

67.5.2.1.5.3 Remove bolts and washers attaching retainers (7) and shim sets (9) to tailboom support brackets (10). Remove retainers and shim sets.

CAUTION

HANDLE RETAINERS WITH CARE TO AVOID DAMAGING INNER SURFACES OF BUSHINGS. KEEP REMOVED PARTS IN SETS.

67.5.2.1.5.4 Remove horn assembly through access opening in bottom of tailboom.

67.5.2.2 Inspection and repair

MATERIALS REQUIRED

NUMBER	NOMENCLATURE
C-300	Adhesive
C-305	Aliphatic Naphtha
C-306	Toluene

67.5.2.2.1 Inspect elevator for damage, dents, and cracks.

67.5.2.2.2 Check elevator radial movement as follows:

67.5.2.2.2.1 With elevators installed, mount a dial indicator on tailboom with stylus in contact with upper surface of elevator at spar station.

67.5.2.2.2.2 Lightly move elevator up and down and observe total reading on dial indicator. Maximum play of 0.010 in (0.254 mm) is permissible. If reading is riot within allowable limits, accomplish following steps 67.5.2.2.2.3 through 67.5.2.2.2.5.

67.5.2.2.2.3 Check elevator for proper installation (paragraph 67.5.2.3).

67.5.2.2.2.4 Check drag on support assembly (paragraph 67.5.2.3).

67.5.2.2.2.5 Inspect elevator and support in

• COPYRIGHT © 2007 BY DART AEROSPACE LTD. •
THIS DOCUMENT IS PRIVATE AND CONFIDENTIAL AND IS SUPPLIED ON THE EXPRESS CONDITION THAT IT IS NOT TO BE USED FOR ANY PURPOSE OR COPIED OR COMMUNICATED TO ANY OTHER PERSON WITHOUT WRITTEN PERMISSION FROM DART AEROSPACE LTD.

accordance with following steps 67.5.2.2.3 and 67.5.2.2.4.

67.5.2.2.3 Inspect elevator for loose rivets, damage, dents, cracks, and worn spar tube (Figure 67-19).

67.5.2.2.4 Inspect support retainer set (7, Figure 67-18) for damage, wear, and looseness (BHT-212-CR&O).

67.5.2.2.5 Inspect horn (5) for damage, dents, cracks, and excessive wear (BHT-212-CR&O).

NOTE

Inboard rib may be modified in accordance with T.B. 212-83-76 to reduce the possibility of cracking.

67.5.2.2.6 Inspect inboard rib for cracks. Small crack in web may be stop drilled if crack does not extend into radius of rib flange. If crack extends into rib flange, replace rib.

67.5.2.2.7 Replace tip cap (11, Figure 67-18) if loose or missing as follows:

67.5.2.2.7.1 Clean elevator tip area with aiphatic naphtha (C-305).

67.5.2.2.7.2 Inspect new cap assembly (11) to ensure freedom from oil, grease, dirt, or other contaminants. If necessary, clean cap with toluene (C-306).

67.5.2.2.7.3 Brush a thin coat of adhesive (C-300) (approximately 0.010 in. (0.254 mm) thick) on elevator tip (cleaned area) and inside of cap.

67.5.2.2.7.4 Allow approximately one hour drying time until adhesive attains an aggressive tack. Install cap on elevator tip.

67.5.2.2.7.5 Retain cap in place at least 15 seconds.

67.5.2.2.7.6 Allow a minimum of 24 hours drying time before releasing helicopter for flight.

68.5.2.2.8 For structural repair of elevator, refer to FAA Aircraft Inspection and Repair Manual AC 43.13-1 A.

67.5.2.2.9 The following procedure is to be used when replacing elevator horn:

CAUTION

HORN MUST BE MACHINED IN ACCORDANCE WITH FIGURE 67-20. FAILURE TO COMPLY WILL RESULT IN LOSS OF INTERCHANGEABILITY WITH FUTURE SPARE PARTS.

67.5.2.2.9.1 Drill 0.375 to 0.376 inch (9.53 to 9.55 mm) diameter hole through both walls of elevator horn. Hole to be 6.750 inches (171.45 mm) inboard of center of elevator attach bolt hole and through center of horn parallel to face of adjacent elevator attach lug (Figure 67-20). Repeat procedure on opposite end of horn. Deburr holes.

67.5.2.2.9.2 Assemble synchronized elevators to horn and secure in place with bolt (2, Figure 67-18).

67.5.2.2.9.3 Push bushing, P/N 20-006-16-32-32 (or similar drill bushing) into one of four holes in elevator horn wall.

NOTE

Bushing should be light push fit in horn. If fit is too tight, polish outside diameter of bushing down until light push fit is obtained.

67.5.2.2.9.4 Drill 0.246 to 0.250 inch (6.25 to 6.35 mm) diameter hole through spar wall using size “D” drill.

67.5.2.2.9.5 Repeat steps 67.5.2.2.9.3 and 67.5.2.2.9.4 for remaining three elevator horn hole locations.

67.5.2.2.9.6 Disassemble elevators from horn.

67.5.2.2.9.7 Drill holes in elevator spars

• COPYRIGHT © 2007 BY DART AEROSPACE LTD. •
THIS DOCUMENT IS PRIVATE AND CONFIDENTIAL AND IS SUPPLIED ON THE EXPRESS CONDITION THAT IT IS NOT TO BE USED FOR ANY PURPOSE OR COPIED OR COMMUNICATED TO ANY OTHER PERSON WITHOUT WRITTEN PERMISSION FROM DART AEROSPACE LTD.

0.312 to 0.313 inch (7.92 to 7.95 mm) diameter. Deburr holes.

67.5.2.2.9.8 Apply primer (C-204) to holes and allow to dry.

67.5.2.3 Installation

MATERIALS REQUIRED	
NUMBER	**NOMENCLATURE**
C-104	Corrosion Preventive Compound

67.5.2.3.1 Coat horn assembly (5, Figure 67-18) with corrosion preventive compound (C-104).

67.5.2.3.2 Insert horn into tailboom through access door on bottom of tailboom below elevator. Position assembly with ends through tailboom brackets (10) and with control arm (6) at right of center pointing down.

67.5.2.3.3 Position shim sets (9) and retainers (7) on tailboom brackets (10) and install attaching washers and bolts. Peel shim sets as necessary to obtain 0.005 in. to 0.030 in. (0.127 to 0.762 mm) lateral play of horn assembly.

CAUTION

HANDLE RETAINERS CAREFULLY TO AVOID DAMAGING INNER SURFACES OF BUSHINGS.

67.5.2.3.4 Secure upper and lower retainers together with two bolts and nuts (with thin aluminum washers next to bolt heads and shims (8) between retainers)

67.5.2.3.5 Adjust preload on bearings as follows:

NOTE

Preload will be measured by using a standard spring scale applied to control arm (6) of horn assembly. Apply spring scale tension 90° to control arm to obtain a correct reading.

67.5.2.3.5.1 With one support retainer set (7) loosely installed, peel or add to shims (8) on opposite set to obtain 13 to 16 lb. (57.827 to 71.172 N) preload with bolts torqued to 50 to 70 in-lbs (5.6 to 7.9 Nm).

67.5.2.3.5.2 Adjust opposite support retainer set (in the same manner) until an overall reading of 26 to 32 lbs. (115.7 to 141.9 N) of drag is measured on horn assembly control arm (6).

67.5.2.3.6 Connect control tube to horn assembly.

67.5.2.3.7 Coat surfaces of elevator spar tube with corrosion preventive compound (C-104). Install each elevator assembly by inserting spar tube into end of horn assembly and installing special retaining bolt with washer. Torque bolt 100 to 140 in.lbs. (11.3 to 15.82 Nm).

67.5.2.3.8 Install bolt (12), washers (13), and nut (14). Tighten nut (14) snugly but do not exceed 10 in.lbs. (1.13 Nm). Install cotter pin.

67.5.2.3.9 Check elevator system rigging.

67.5.2.3.10 Install access door on underside of tailboom.

• COPYRIGHT © 2007 BY DART AEROSPACE LTD. •
THIS DOCUMENT IS PRIVATE AND CONFIDENTIAL AND IS SUPPLIED ON THE EXPRESS CONDITION THAT IT IS NOT TO BE USED FOR ANY PURPOSE OR COPIED OR COMMUNICATED TO ANY OTHER PERSON WITHOUT WRITTEN PERMISSION FROM DART AEROSPACE LTD.

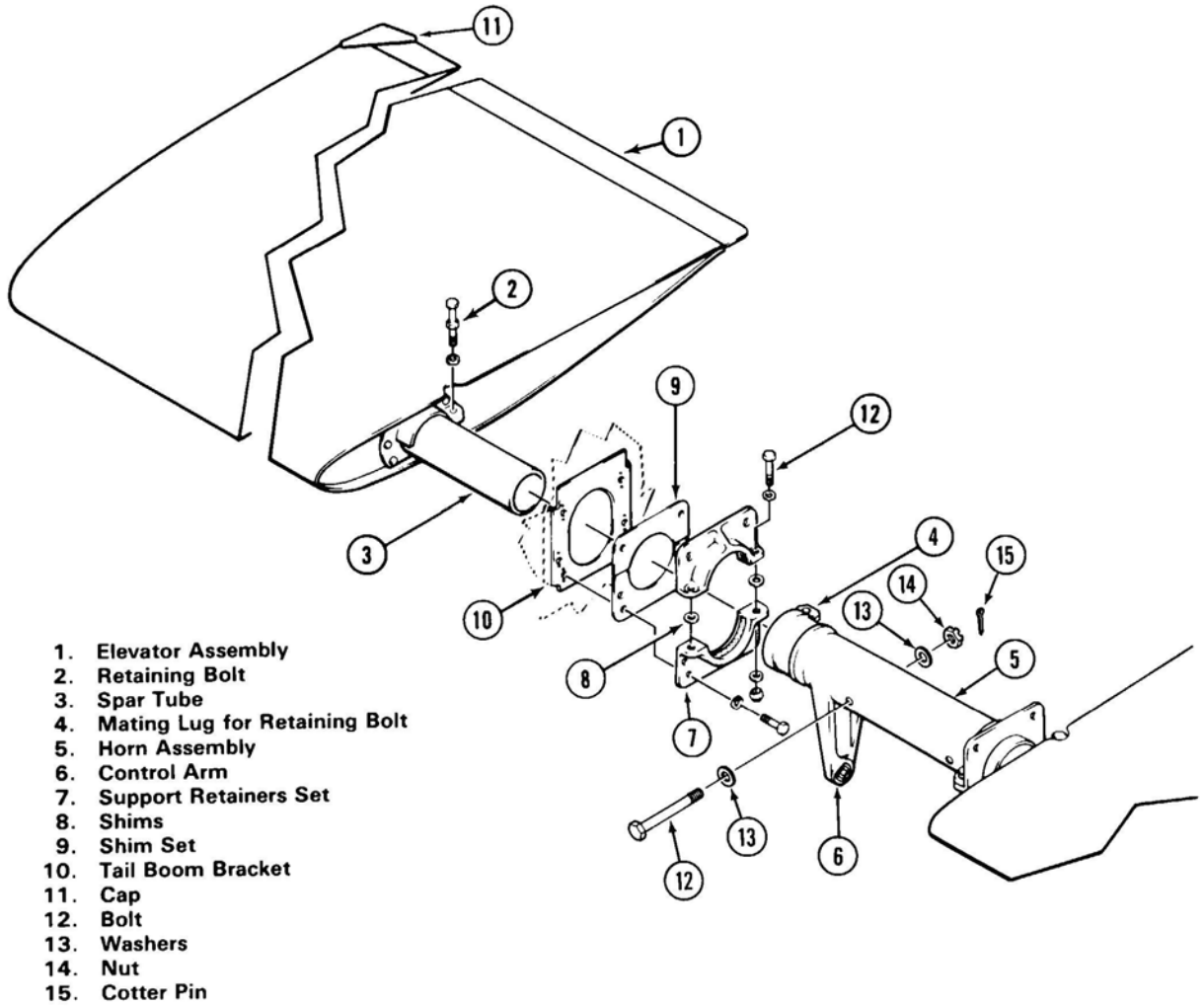

Figure 67-18. Synchronized Elevator

• COPYRIGHT © 2007 BY DART AEROSPACE LTD. •
THIS DOCUMENT IS PRIVATE AND CONFIDENTIAL AND IS SUPPLIED ON THE EXPRESS CONDITION THAT IT IS NOT TO BE USED FOR ANY PURPOSE OR COPIED OR COMMUNICATED TO ANY OTHER PERSON WITHOUT WRITTEN PERMISSION FROM DART AEROSPACE LTD.

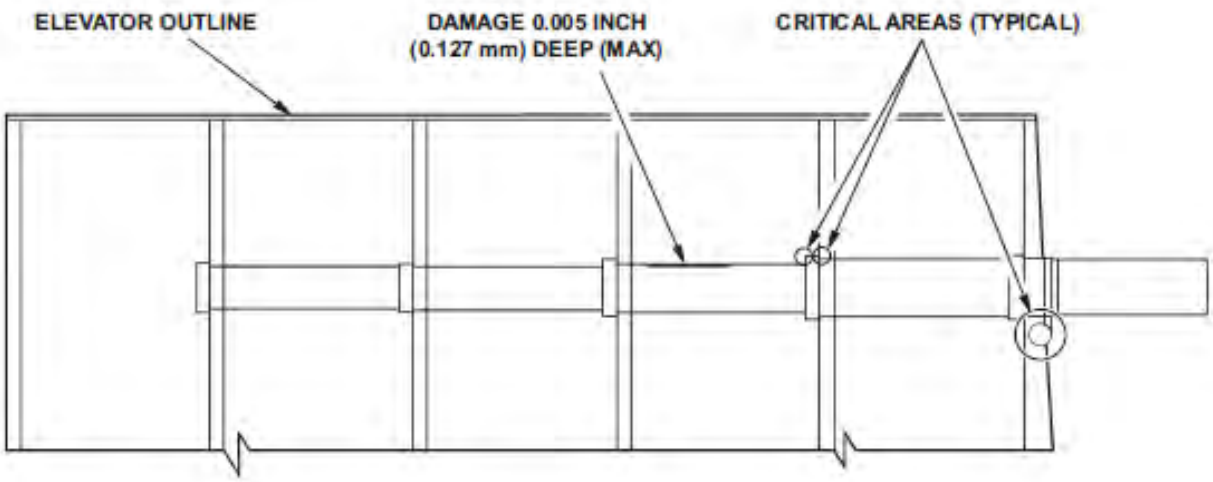

NOTES

1. The entire elevator spar tube is a critical fatigue area. The area where the elevator attaches to the horn and the radii adjacent to the rib lands are especially critical because these are the points where loads are transferred to the spar. If an elevator sustains damage, the elevator skin must be removed for inspection of the spar prior to repair of the internal damage.

   LIMITS - REPAIRABLE DAMAGE. Scratch and scoring damage is limited to 0.005 inch (0.127 mm) depth after clean-up with 400 grit or smoother abrasive paper to a polished smooth surface. Scratch and scoring damage is further limited as follows: 0.50 inch (12.7 mm) radially. 1.00 inch (25.4 mm) longitudinally. No dents which result in visible tube wall depressions are permitted. The allowable limit on pit corrosion is 10% of wall thickness. No corrosion is permitted after clean-up.

2. Apply two coats of epoxy polyamide primer (C-204) to spar in clean-up areas and a light coat of super koropon primer (C-202) or epoxy polyamide primer (C-204) to portion of spar which fits inside horn.

Figure 67-19. Elevator Spar Damage

• COPYRIGHT © 2007 BY DART AEROSPACE LTD. •
THIS DOCUMENT IS PRIVATE AND CONFIDENTIAL AND IS SUPPLIED ON THE EXPRESS CONDITION THAT IT IS NOT TO BE USED FOR ANY PURPOSE OR COPIED OR COMMUNICATED TO ANY OTHER PERSON WITHOUT WRITTEN PERMISSION FROM DART AEROSPACE LTD.

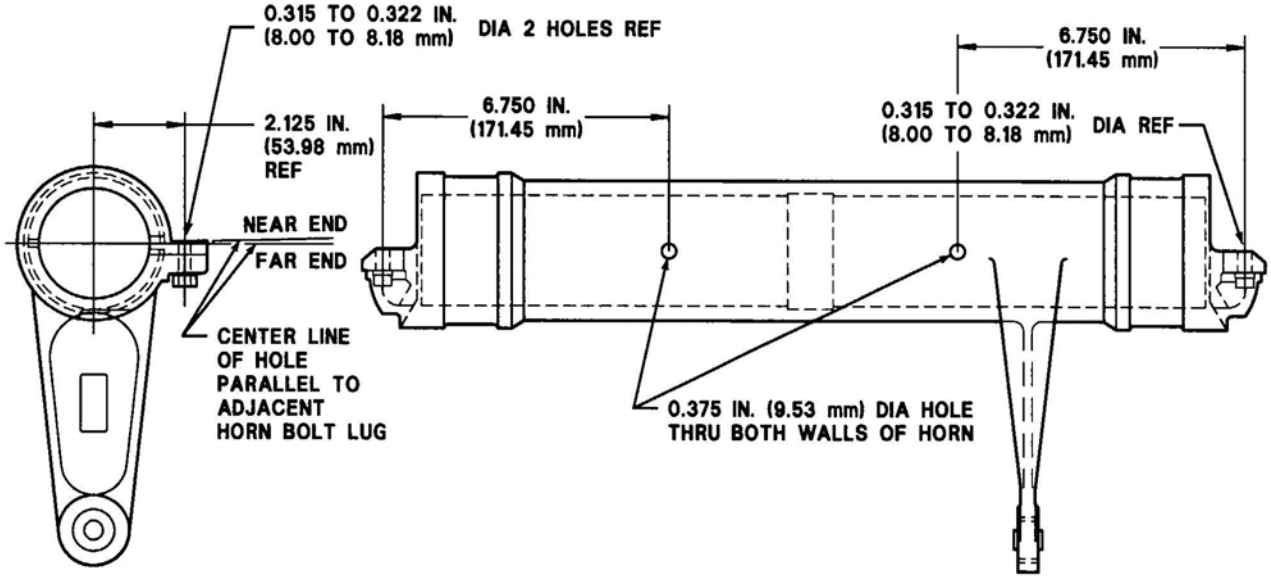

Figure 67-20. Elevator Horn Hole Location

• COPYRIGHT © 2007 BY DART AEROSPACE LTD. •
THIS DOCUMENT IS PRIVATE AND CONFIDENTIAL AND IS SUPPLIED ON THE EXPRESS CONDITION THAT IT IS NOT TO BE USED FOR ANY PURPOSE OR COPIED OR COMMUNICATED TO ANY OTHER PERSON WITHOUT WRITTEN PERMISSION FROM DART AEROSPACE LTD.

CHAPTER 71
POWER PLANT SYSTEM
(71-00-00)

• COPYRIGHT © 2007 BY DART AEROSPACE LTD. •
THIS DOCUMENT IS PRIVATE AND CONFIDENTIAL AND IS SUPPLIED ON THE EXPRESS CONDITION THAT IT IS NOT TO BE USED FOR ANY PURPOSE OR COPIED OR COMMUNICATED TO ANY OTHER PERSON WITHOUT WRITTEN PERMISSION FROM DART AEROSPACE LTD.

CHAPTER 71 – POWER PLANT SYSTEM (71-00-00)

TABLE OF CONTENTS

LIST OF FIGURES 2
71.1 Power Plant System 3
71.1.1 Power Plant – General 3
71.2 Cowling and Fairings 16
71.2.1 Cowling and Fairings – General 16
71.2.2 Engine Cowling 16
71.2.3 Engine Intake Faring 16
71.2.4 Transmission Cowling 17
71.2.5 Tailpipe Fairing 17
71.3 Engine Mounts 19
71.3.1 Engine Mounts 19
71.4 Power Plant Buildup 23

LIST OF FIGURES

Figure 71-1. Engine (Left Side) 4
Figure 71-2. Engine (Right Side) 5
Figure 71-3. Engine Stand 6
Figure 71-4. Positioning Pylon for Driveshaft Alignment 10
Figure 71-5. Engine Mount Fittings 12
Figure 71-6. Typical Leg Assembly 13
Figure 71-7. Lockwire Details 14
Figure 71-8. Use of Alignment Tool Set T101419 15
Figure 71-9. Location of Airframe Components 18
Figure 71-10. Engine Mounts 21
Figure 71-11. 204-060-743-005 Lever Assembly Installation Detail 22

• COPYRIGHT © 2007 BY DART AEROSPACE LTD. •
THIS DOCUMENT IS PRIVATE AND CONFIDENTIAL AND IS SUPPLIED ON THE EXPRESS CONDITION THAT IT IS NOT TO BE USED FOR ANY PURPOSE OR COPIED OR COMMUNICATED TO ANY OTHER PERSON WITHOUT WRITTEN PERMISSION FROM DART AEROSPACE LTD.

71.1 POWER PLANT SYSTEM

71.1.1 Power Plant – General

The T5317A/B/BCV gas turbine engine is a free turbine power plant. The engine is a shaft turbine engine with a two-stage, free-type power turbine and a two-stage gas producer turbine that drives a combination axial centrifugal compressor. Five major sections of the engine are air inlet, compressor, diffuser, combustor, and exhaust. The maintenance procedures outlined in the following paragraphs include only those systems and controls that are not a part of the basic engine. Maintenance and overhaul instructions for the basic engine are found in the applicable Honeywell Publications.

Tools Required

- - - -	Hoist
LTCT773	Engine Sling

71.1.1.1 Removal – Power Plant

Remove engine from helicopter as a quick-change assembly, with adapting parts attached as outlined below. Preservation should be accomplished, if applicable, before removing engine.

71.1.1.1.1 Disconnect battery.

71.1.1.1.2 Open engine cowling. Disconnect starter generator air duct at top end, release support tubes, pull pins at each end of support beam and remove top sections of the engine cowl.

71.1.1.1.3 Disconnect antenna and anti-collision light connections under tailpipe. Unfasten sections of tailpipe fairing and remove from helicopter.

71.1.1.1.4 Remove air inlet cowl and screening. Remove main input driveshaft. (Refer to Chapter 63.)

71.1.1.1.5 Disconnect fuel and oil hoses, electrical connectors and engine controls as follows: (Refer to Figures 71-1 and 71-2.)

71.1.1.1.5.1 When disconnecting fuel and oil hoses with shroud installed, loosen clamp to allow shroud to be moved for access to hose connection. Retain clamp and shroud with hose.

71.1.1.1.5.2 Disconnect oil and fuel hoses and electrical connector at engine deck. Disconnect bleed air hose at selector valve.

71.1.1.1.5.3 Disconnect oil pump outlet hose at external oil filter. Disconnect fuel inlet hose at fuel filter.

71.1.1.1.5.4 Disconnect droop compensator control tube from cambox at left forward side of engine. Disconnect power lever control tube at power lever arm on fuel control.

71.1.1.1.5.5 Disconnect electrical connectors at forward firewall, fuel pressure transmitter, engine oil filter switch and fuel filter bypass switch. Remove clamps from wiring.

71.1.1.1.5.6 Disconnect breather hose and oil inlet hose at oil tank.

71.1.1.1.6 Install suitable engine hoist.

71.1.1.1.7 Attach LTCT773 engine sling or suitable type sling to lifting points on engine, and connect to hoist.

71.1.1.1.8 Release fasteners on aft engine firewall.

71.1.1.1.9 Remove V-band coupling (1, Figure 71-1) which secures air intake bellmouth to flange of engine inlet housing.

71.1.1.1.10 At each engine mount pillow block (2), open hinged bearing cap by loosening nut on latching eyebolt. Remove forward left engine mount tube assembly by removing bolt and washer.

• COPYRIGHT © 2007 BY DART AEROSPACE LTD. •
THIS DOCUMENT IS PRIVATE AND CONFIDENTIAL AND IS SUPPLIED ON THE EXPRESS CONDITION THAT IT IS NOT TO BE USED FOR ANY PURPOSE OR COPIED OR COMMUNICATED TO ANY OTHER PERSON WITHOUT WRITTEN PERMISSION FROM DART AEROSPACE LTD.

71.1.1.1.11 Hoist engine from helicopter, carefully guiding engine nose out of forward firewall bellmouth. Install engine in suitable stand. (Refer to Figure 71-3).

71.1.1.1.12 Remove all engine QEC parts (hoses, brackets, wiring, etc.) except those which are a part of the basic engine. Keep hose shroud and clamps with hoses.

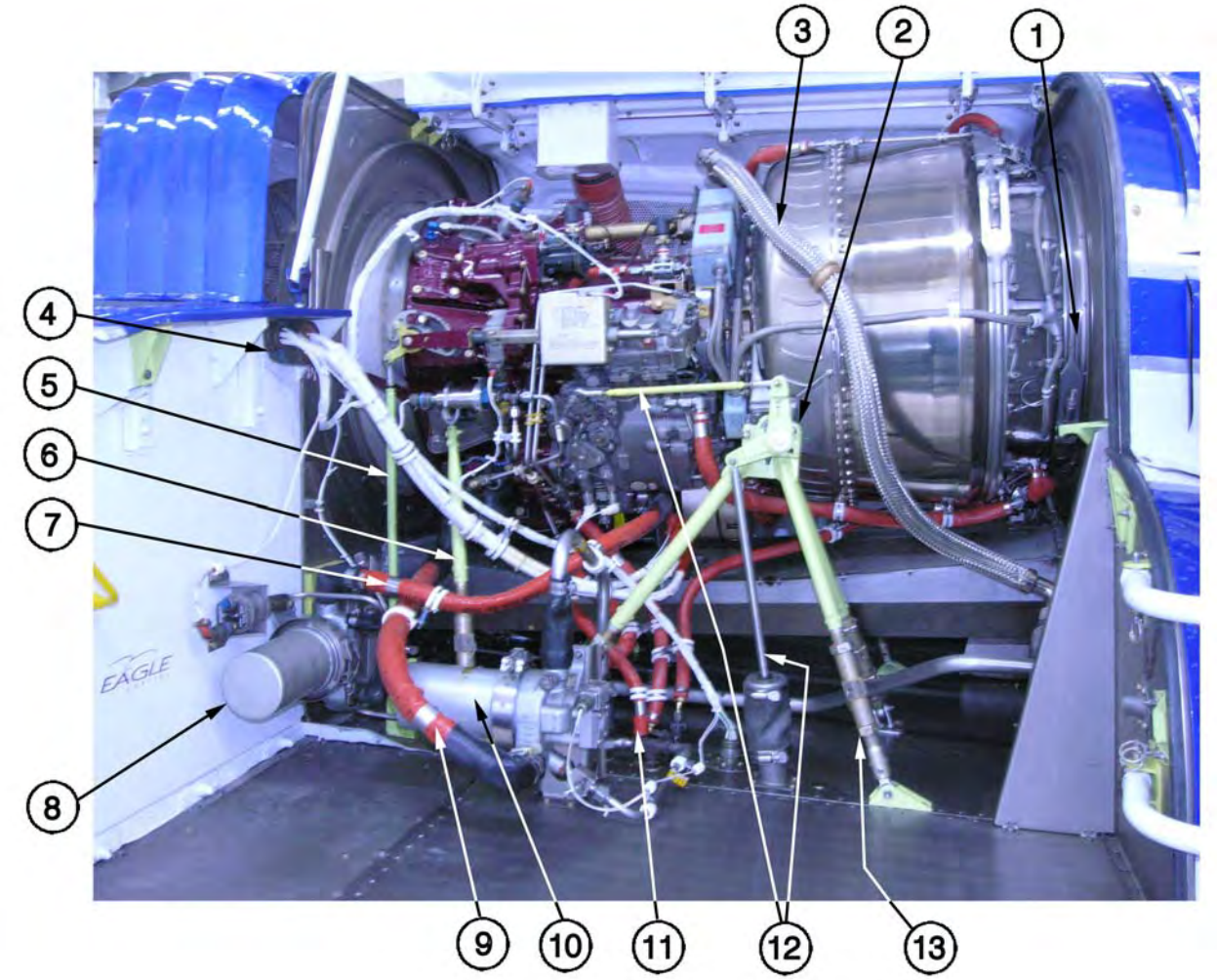

1. V-Band Coupling (AFT)
2. Pillow Block
3. Bleed Air Hose
4. Starter-Generator and Engine Electrical Connectors
5. Governor and Cambox Control Rods
6. Forward Support Tube
7. Fuel Control Inlet Hose
8. Fuel Filter
9. Oil Pump Outlet Hose
10. Oil Filter
11. Starter Drive Seal Drain Hose
12. Fuel Control Rods
13. Tripod

Figure 71-1. Engine (Left Side)

• COPYRIGHT © 2007 BY DART AEROSPACE LTD. •
THIS DOCUMENT IS PRIVATE AND CONFIDENTIAL AND IS SUPPLIED ON THE EXPRESS CONDITION THAT IT IS NOT TO BE USED FOR ANY PURPOSE OR COPIED OR COMMUNICATED TO ANY OTHER PERSON WITHOUT WRITTEN PERMISSION FROM DART AEROSPACE LTD.

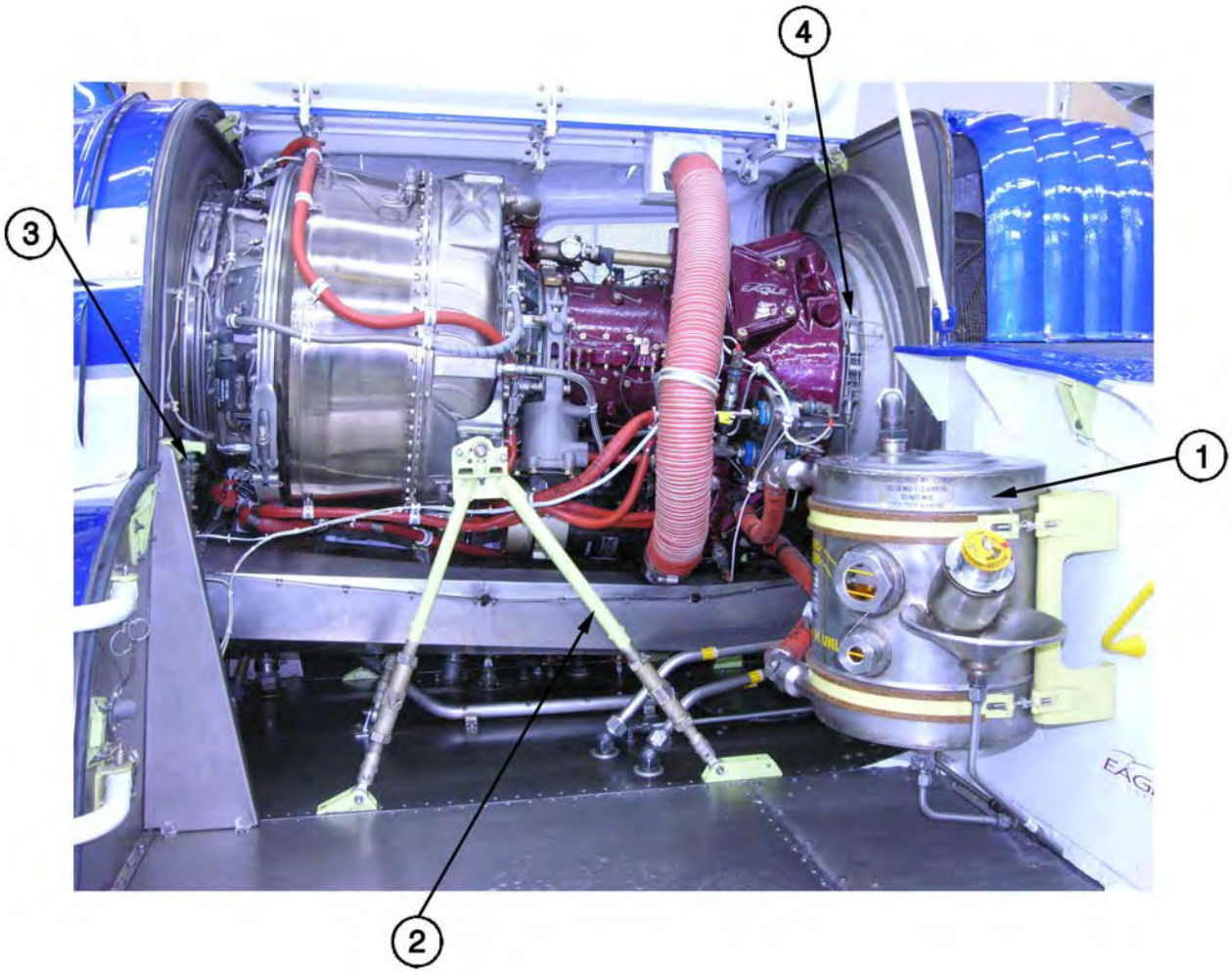

1. Oil Tank
2. Bipod
3. EGT/MGT Firewall Connector
4. V Band Coupling (FWD)

Figure 71-2. Engine (Right Side)

• COPYRIGHT © 2007 BY DART AEROSPACE LTD. •
THIS DOCUMENT IS PRIVATE AND CONFIDENTIAL AND IS SUPPLIED ON THE EXPRESS CONDITION THAT IT IS NOT TO BE USED FOR ANY PURPOSE OR COPIED OR COMMUNICATED TO ANY OTHER PERSON WITHOUT WRITTEN PERMISSION FROM DART AEROSPACE LTD.

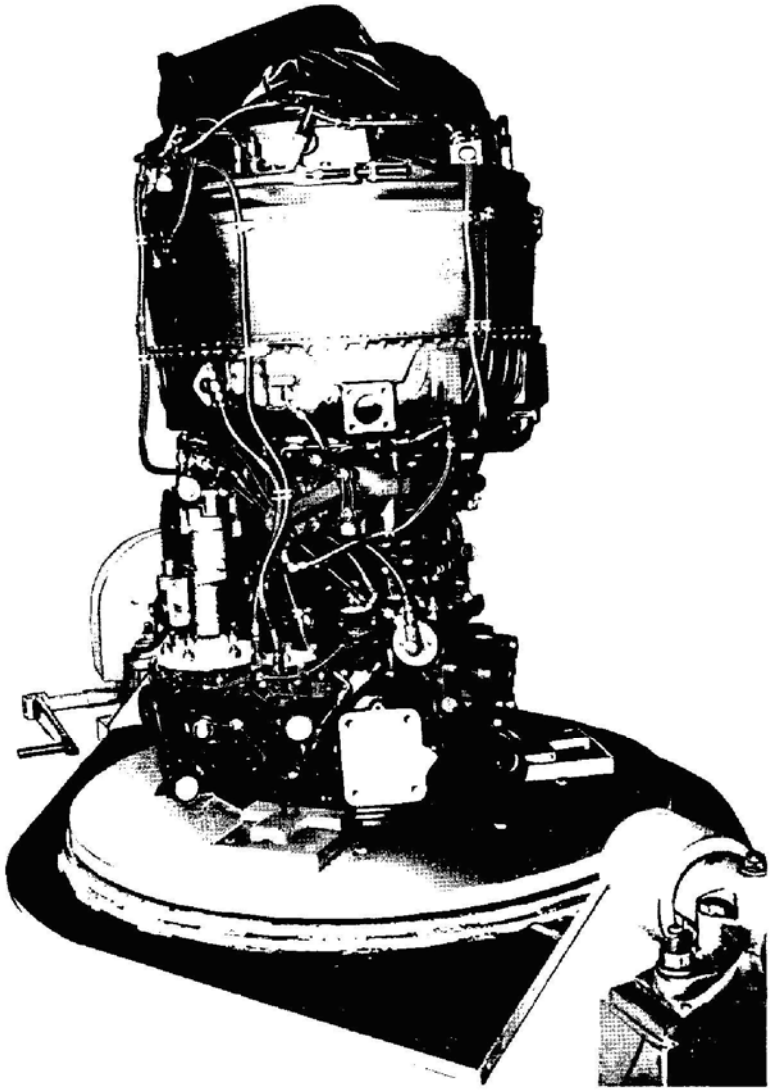

Figure 71-3. Engine Stand

• COPYRIGHT © 2007 BY DART AEROSPACE LTD. •
THIS DOCUMENT IS PRIVATE AND CONFIDENTIAL AND IS SUPPLIED ON THE EXPRESS CONDITION THAT IT IS NOT TO BE USED FOR ANY PURPOSE OR COPIED OR COMMUNICATED TO ANY OTHER PERSON WITHOUT WRITTEN PERMISSION FROM DART AEROSPACE LTD.

71.1.1.2 Installation – Power Plant

This procedure applies to engine built up with adapting parts to constitute a quick change assembly.

71.1.1.2.1 Erect suitable engine hoist. Attach cables of suitable engine sling on bolts or pins inserted through eye on inlet housing and bracket on diffuser section. Attach hoist to sling and lift engine to horizontal position above mounts.

NOTE

Check trunnion mount bearings prior to installation for 0.010 inch maximum axial play and 0.004 inch maximum radial play between ball and race. If bearing play is greater than these values, replace bearings.

71.1.1.2.2 Check that air intake bellmouth is free to shift in slip joint of forward firewall to align with engine inlet flange. If necessary, loosen screws through firewall around bellmouth. Guide engine nose into bellmouth while lowering engine until trunnion bearings rest on pillow blocks (2, Figure 71-1).

71.1.1.2.3 Position forward support tube (6) rod-end, against mount trunnion fitting at left side of inlet housing. Install retaining bolt and washer. Lockwire bolt of trunnion. Close bearing caps of mount pillow blocks, and tighten nuts on latching eyebolts.

71.1.1.2.4 Secure upper section of rear firewall to lower section with cowl fasteners.

71.1.1.2.5 Place V-band coupling clamp over mating flanges of air intake bellmouth and engine inlet housing. Tap around clamp to seat while latching and tightening. Torque nut 40 to 50 inch-pounds, and lockwire. If loosened, retighten screws in firewall around bellmouth. Install beam and cowl halves with pip-pins, between tops of forward and rear firewalls.

NOTE

Ensure large gap in "V" band clamp is located at the 6:00 position to allow for drainage. The latch and bolt are located at the 3:00 position. Refer to Figure 72-2 (4).

71.1.1.2.6 Check engine-to-transmission alignment, if required. (Refer to paragraph 71.1.1.3).

71.1.1.2.7 Install main driveshaft between engine and transmission and reinstall access sections of intake screen and baffle. (Refer to Chapter 63).

71.1.1.2.8 Connect engine hoses as follows:

NOTE

To avoid improper installation of engine hose assemblies, adhere strictly to the procedures outlined below.

71.1.1.2.8.1 Fuel control inlet hose (7, Figure 71-1) to maintain strainer outlet coupling. Position shroud over connection and secure with clamp.

71.1.1.2.8.2 Fuel control seal drain and combustion drain hose to deck coupling below left mount trunnion. Starter drive seal drain hose (11) to deck coupling forward of fuel control seal drain coupling.

71.1.1.2.8.3 Governor bleed hose to deck coupling inboard of fuel strainer. Position shroud over connection and secure with clamp.

71.1.1.2.8.4 Oil pump outlet hose (9) to coupling on left side of filter. Position shroud over connection and secure with clamp.

71.1.1.2.8.5 Oil pump inlet hose to oil tank lower coupling and engine breather hose to oil tank upper coupling.

71.1.1.2.8.6 Exhaust tailpipe drain hose to coupling behind rear firewall.

NOTE

Prior to installation of bleed air hoses apply dry film lube (C-005) to fitting threads.

• COPYRIGHT © 2007 BY DART AEROSPACE LTD. •
THIS DOCUMENT IS PRIVATE AND CONFIDENTIAL AND IS SUPPLIED ON THE EXPRESS CONDITION THAT IT IS NOT TO BE USED FOR ANY PURPOSE OR COPIED OR COMMUNICATED TO ANY OTHER PERSON WITHOUT WRITTEN PERMISSION FROM DART AEROSPACE LTD.

71.1.1.2.8.7 Connect bleed air hose (3) to coupling on selector valve at left side of deck.

NOTE

Route bleed air hose as shown in Figure 71-1 (3). Ensure hose does not contact engine, engine accessories or engine cowls when installed.

71.1.1.2.9 Connect starter-generator cooling hose to inlet duct of cowling.

71.1.1.2.10 Connect electrical cables and leads and lockwire connectors as follows:

71.1.1.2.10.1 Connect starter-generator connector (4) at large receptacle on upper left FWD firewall.

71.1.1.2.10.2 Connect main electrical cable at forward firewall and on engine deck below left engine mount. Connect electrical connectors at fuel pressure transmitter, fuel filter bypass switch, and oil filter switch. Install clamps to secure wiring.

71.1.1.2.11 Connect and rig control linkages to power lever arm and governor control lever on fuel control unit. (Refer to Chapter 76.)

71.1.1.2.12 Install tailpipe fairing, connecting antenna, and anti-collision light wiring at deck connectors.

71.1.1.2.13 Check servicing. Reconnect battery. Accomplish post-installation inspection and ground functional checks.

71.1.1.3 Alignment – Power Plant

Tools Required

- - - -	Hoist
T101419	Tool Set
T101440	Jacks

71.1.1.3.1 Check alignment of the main driveshaft installation between the transmission input drive quill coupling and the engine output shaft adapter when any of the following conditions exist.

71.1.1.3.1.1 Main driveshaft inspection reveals excessive wear of coupling spline.

71.1.1.3.1.2 Replacement of main transmission.

71.1.1.3.1.3 Replacement of transmission isolation mounts.

71.1.1.3.1.4 Hard landing which does not show apparent structural damage.

71.1.1.3.1.5 Replacement of engine.

71.1.1.3.1.6 Major repair or replacement of components in center fuselage, tailboom, or pylon support structure.

71.1.1.3.1.7 Driveshaft misalignment is suspected for any reason.

71.1.1.3.2 Remove the main driveshaft assembly, leaving the engine output shaft adapter installed.

71.1.1.3.3 Position transmission pylon as follows:

71.1.1.3.3.1 Release fasteners attaching lower access doors to pylon support and remove doors. Remove screws attaching upper access doors to pylon support and remove doors.

71.1.1.3.3.2 Use maintenance hoist to raise pylon to position where lower bolt of lift link can be moved freely with nut and washer removed. (Refer to Figure 71-4.) Replace bolt if binding occurs due to corrosion or galling. Check upper bolt with nut and washer removed. Replace bolt if binding occurs due to corrosion or galling. Apply grease (C-001) to bore and OD of bushing.

71.1.1.3.3.3 Install four transmission leveling jacks, T101440 (two at each side) between transmission support case and top of pylon support and remove cotter pin, nut, and washer from lower end of lift link.

• COPYRIGHT © 2007 BY DART AEROSPACE LTD. •
THIS DOCUMENT IS PRIVATE AND CONFIDENTIAL AND IS SUPPLIED ON THE EXPRESS CONDITION THAT IT IS NOT TO BE USED FOR ANY PURPOSE OR COPIED OR COMMUNICATED TO ANY OTHER PERSON WITHOUT WRITTEN PERMISSION FROM DART AEROSPACE LTD.

NOTE
Use shim plates on jacks to obtain necessary height.

71.1.1.3.3.4 With maintenance hoist detached, and nut and washer removed from lower bolt of lift link, adjust jacks to raise transmission until bolt can be freely moved with fingers.

71.1.1.3.3.5 Determine that transmission support points are symmetrically parallel with pylon support structure by measuring at each mount with a micrometer depth gage. (Refer to Figure 71-4.)

71.1.1.3.3.6 Use micrometer depth gage to measure from the top surface of the support case mounting plates to the top of the pylon support. This measurement is to be taken at each of the four mounts.

NOTE
Disregard step 71.1.1.3.3.7 if assembly uses 212-040-054 case which has integral fifth mount.

71.1.1.3.3.7 Subtract thickness of support beam from the measurements obtained at the two aft mounts. This action will allow for thickness of the fifth mount support beam channel, which covers the mounting plates at these two points. All four measurements should now be equal within 0.020 inch.

NOTE
The lower thickness of the fifth mount support beam channel need not be considered, since it has been compensated for by a difference in the filler plates.

71.1.1.3.3.8 When all four points cannot be adjusted to the same dimension, take the average of the two front points and adjust the two rear points accordingly.

71.1.1.3.3.9 Upon completion of transmission pylon positioning, recheck the lower and upper bolt of the lift link to make sure that it can be freely moved with the fingers.

71.1.1.3.4 Install the target plate of T101419 engine-to-transmission driveshaft alignment tool set on the transmission input quill coupling. (Refer to Figure 71-8)

71.1.1.3.5 Set the target plate with the arrow of the center disc indexed at 8.0 on the inner scale, and secure by tightening the two washer-head screws at back of plate. Position the plate or the coupling with the 35.6 index of the outer scale at the top of the vertical center line. Secure with coupling clamp set.

71.1.1.3.6 Install alignment gage of tool set on the engine output shaft adapter, and secure with coupling clamp set.

71.1.1.3.7 Check horizontal and vertical alignment by inserting a suitable tool through access holes in the alignment gage housing and pushing the plunger forward, against the retracting spring tension, toward the target plate hole.

NOTE
To indicate correct alignment, largest diameter of plunger must enter hole in target plate. If misalignment is indicated, observe and note amount and direction of such misalignment.

No correction of misalignment should be attempted before completion of angularity check outlined in step 71.1.1.3.8. Correction can be best determined on the basis of both checks.

71.1.1.3.8 Perform angularity check as follows:

71.1.1.3.8.1 Mount a dial indicator on the forward end of the alignment gage plunger as shown in Figure 71-8.

71.1.1.3.8.2 Position the dial indicator for contact at 2.5 inch radius (just inside outer scale numerals). Zero the dial indicator at 12 o'clock position. Check runout through a full turn of the gage. Runout must be 0.030 ± 0.004 at 6

• COPYRIGHT © 2007 BY DART AEROSPACE LTD. •
THIS DOCUMENT IS PRIVATE AND CONFIDENTIAL AND IS SUPPLIED ON THE EXPRESS CONDITION THAT IT IS NOT TO BE USED FOR ANY PURPOSE OR COPIED OR COMMUNICATED TO ANY OTHER PERSON WITHOUT WRITTEN PERMISSION FROM DART AEROSPACE LTD.

o'clock position. Re-zero indicator at 3 o'clock position. Read +0.006 ± 0.004 at 9 o'clock position.

71.1.1.3.9 Correct engine alignment per section 71.1.1.4.

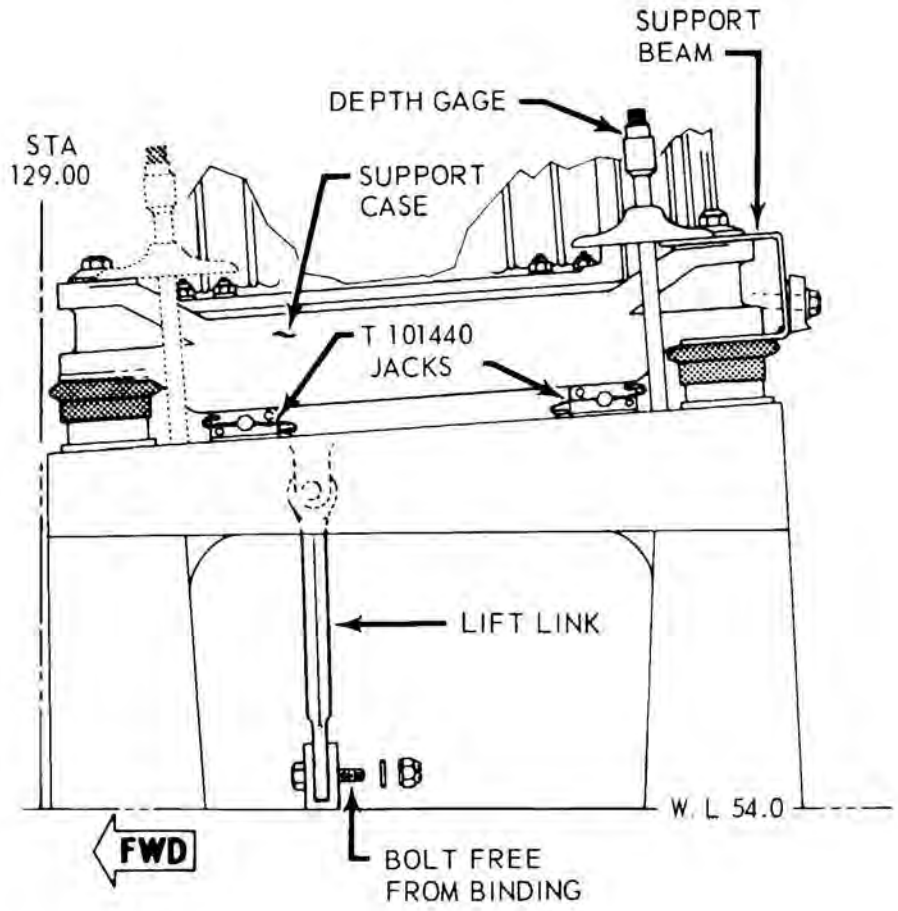

Figure 71-4. Positioning Pylon for Driveshaft Alignment

71.1.1.4 Corrections to Engine Alignment

71.1.1.4.1 Corrections to be made to engine alignment as follows (See Figures 71-5 thru 71-8)

71.1.1.4.2 Cut and remove safety wire from each turnbuckle assembly.

71.1.1.4.3. Loosen jam nuts at each end of turnbuckle assembly.

71.1.1.4.4 Achieve alignment of engine by rotating each turnbuckle sleeve on the tube assembly, bipod assembly and tripod assembly per Figure 71-8.

71.1.1.4.5 Make sure stud threads are still visible through witness holes.

71.1.1.4.6 Torque nuts 400 to 600 in-lbs (45.2-67.8 Nm).

71.1.1.4.7 Safety wire turnbuckle assembly

• COPYRIGHT © 2007 BY DART AEROSPACE LTD. •
THIS DOCUMENT IS PRIVATE AND CONFIDENTIAL AND IS SUPPLIED ON THE EXPRESS CONDITION THAT IT IS NOT TO BE USED FOR ANY PURPOSE OR COPIED OR COMMUNICATED TO ANY OTHER PERSON WITHOUT WRITTEN PERMISSION FROM DART AEROSPACE LTD.

as shown in Figure 71-7 using lockwire P/N MS20995C41.

71.1.1.4.8 Seal lockwire holes in sleeve and around nut/thread interface with sealant per MIL-S-8802.

71.1.1.5 Reinstall Engine Support Fittings

71.1.1.5.1 Reinstall the engine support fittings with the short end of the fitting facing toward angle A of Figure 71-5. Check support fittings screws and bolts for correct length.

71.1.1.5.2 Interference between the engine and the aft upper firewall at the 9 o'clock position (looking forward) may result with this realignment. If this condition occurs accomplish the following:

71.1.1.5.2.1 Remove the aft upper firewall assembly and disassemble by removing the sixteen screws.

71.1.1.5.2.2 Remove the aft section of firewall web and enlarge the sixteen holes, by drilling, to 5/16 inch (7.938 mm).

71.1.1.5.2.3 Deburr the drilled holes. Reassemble the firewall assembly using AN970-3 washers over the enlarged holes and under the 16 screw heads.

71.1.1.5.3 Loosen screws around intake bellmouth in forward firewall, and around attaching ring in rear firewall, to allow engine to shift as necessary during alignment.

71.1.1.5.4 Repeat alignment and angularity check after any adjustment of turnbuckle assembly.

71.1.1.5.5 When alignment is correct, remove T101419 tool set and T101440 jacks. Retighten screws in firewalls as necessary.

71.1.1.5.6 Install nut, washer, and cotter pin on lower bolt in lift link. Install access doors on pylon island. (Refer to Chapter 63.)

71.1.1.5.7 Install main driveshaft. (Refer to Chapter 63.)

71.1.1.5.8 Check fuel control and governor linkage for proper rigging and cushion.

• COPYRIGHT © 2007 BY DART AEROSPACE LTD. •
THIS DOCUMENT IS PRIVATE AND CONFIDENTIAL AND IS SUPPLIED ON THE EXPRESS CONDITION THAT IT IS NOT TO BE USED FOR ANY PURPOSE OR COPIED OR COMMUNICATED TO ANY OTHER PERSON WITHOUT WRITTEN PERMISSION FROM DART AEROSPACE LTD.

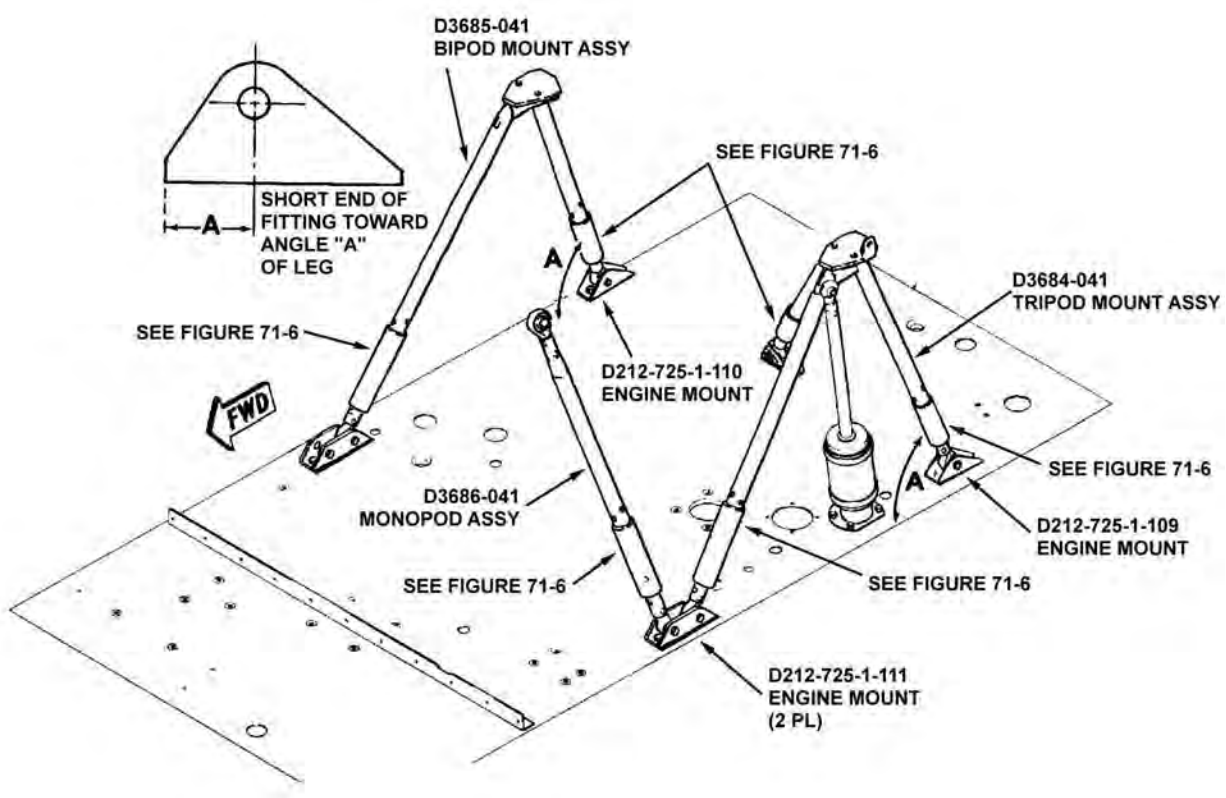

Figure 71-5. Engine Mount Fittings

• COPYRIGHT © 2007 BY DART AEROSPACE LTD. •
THIS DOCUMENT IS PRIVATE AND CONFIDENTIAL AND IS SUPPLIED ON THE EXPRESS CONDITION THAT IT IS NOT TO BE USED FOR ANY PURPOSE OR COPIED OR COMMUNICATED TO ANY OTHER PERSON WITHOUT WRITTEN PERMISSION FROM DART AEROSPACE LTD.

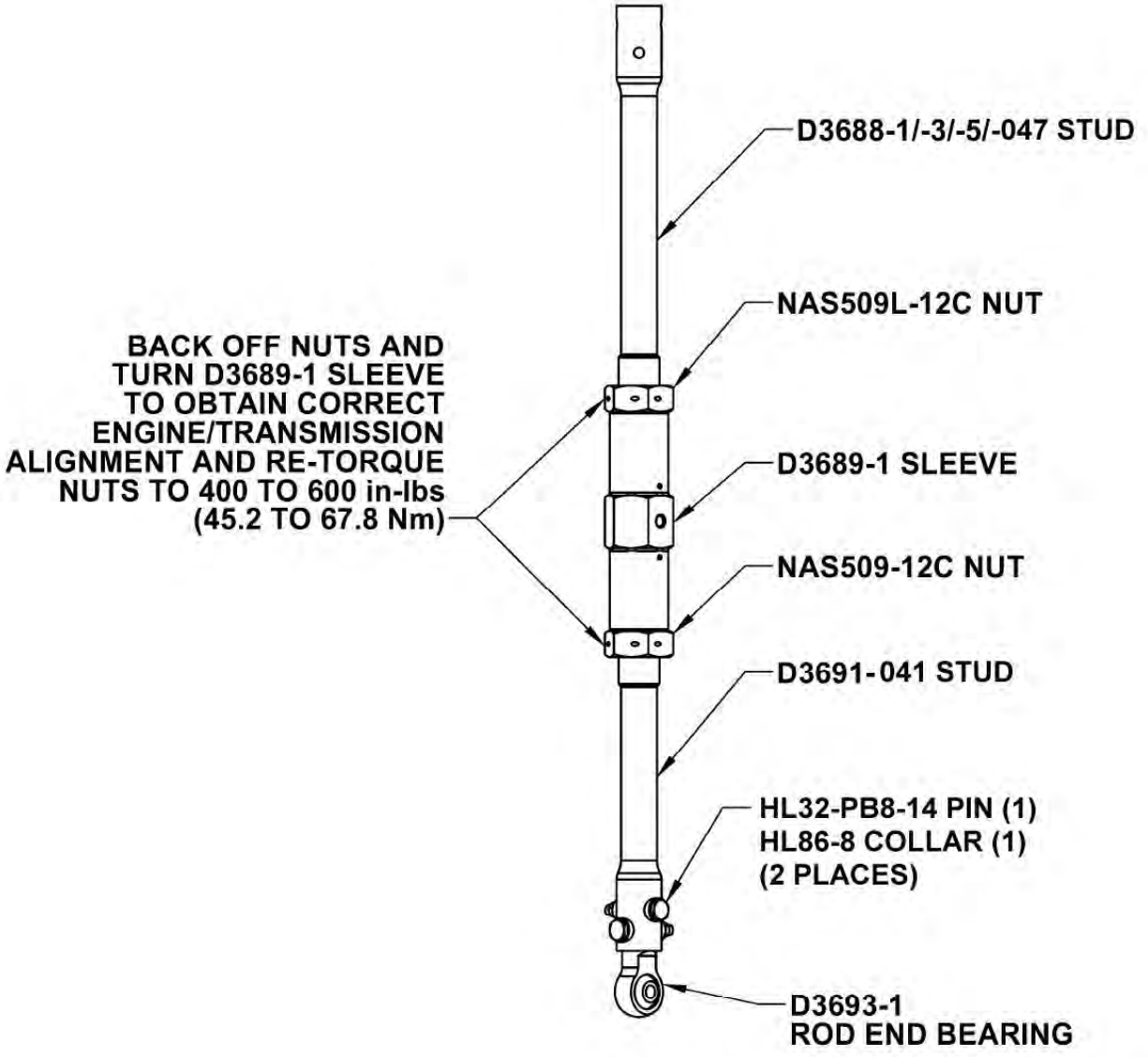

Figure 71-6. Typical Leg Assembly

• COPYRIGHT © 2007 BY DART AEROSPACE LTD. •
THIS DOCUMENT IS PRIVATE AND CONFIDENTIAL AND IS SUPPLIED ON THE EXPRESS CONDITION THAT IT IS NOT TO BE USED FOR ANY PURPOSE OR COPIED OR COMMUNICATED TO ANY OTHER PERSON WITHOUT WRITTEN PERMISSION FROM DART AEROSPACE LTD.

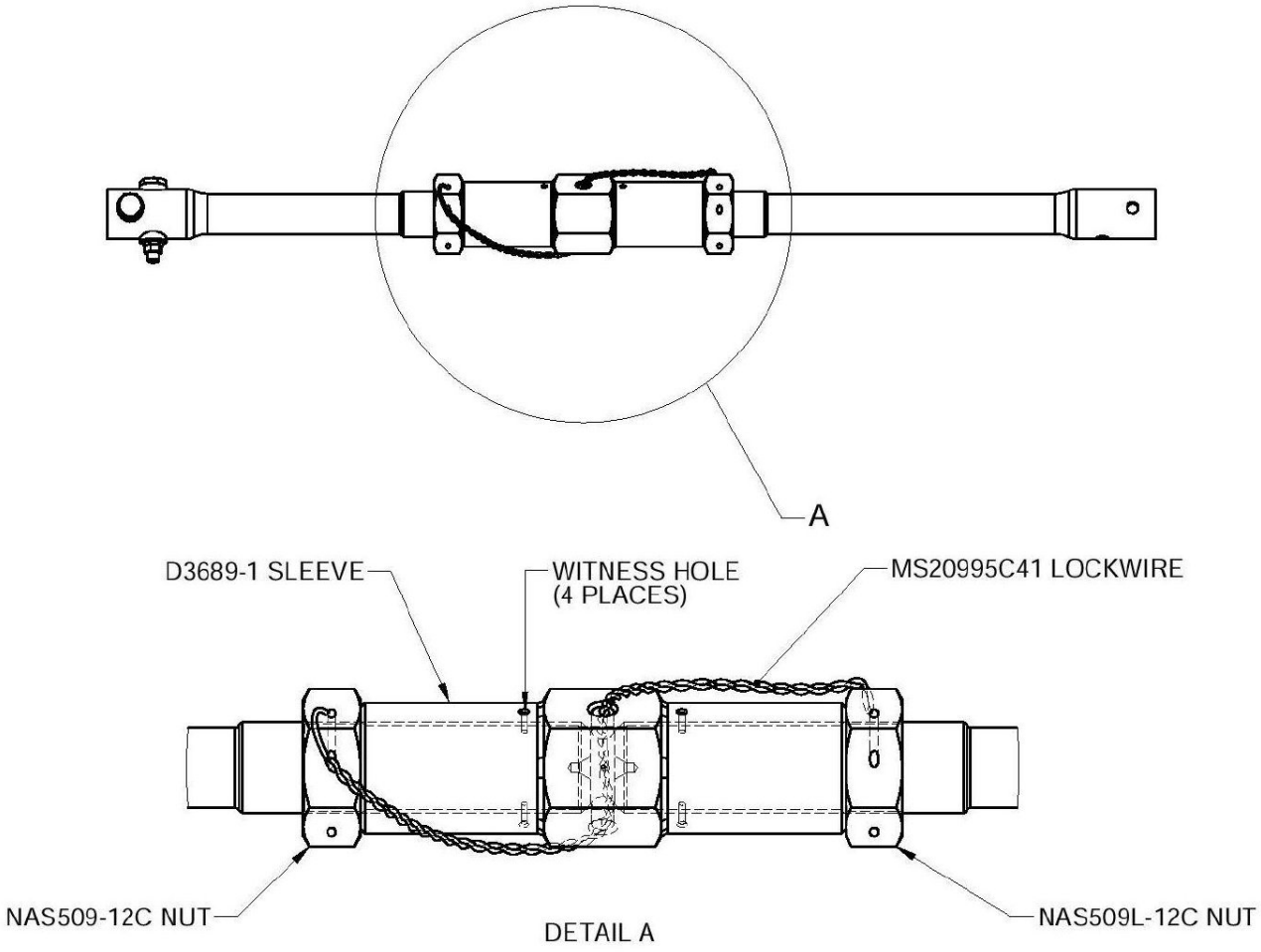

Figure 71-7. Lockwire Details

• COPYRIGHT © 2007 BY DART AEROSPACE LTD. •
THIS DOCUMENT IS PRIVATE AND CONFIDENTIAL AND IS SUPPLIED ON THE EXPRESS CONDITION THAT IT IS NOT TO BE USED FOR ANY PURPOSE OR COPIED OR COMMUNICATED TO ANY OTHER PERSON WITHOUT WRITTEN PERMISSION FROM DART AEROSPACE LTD.

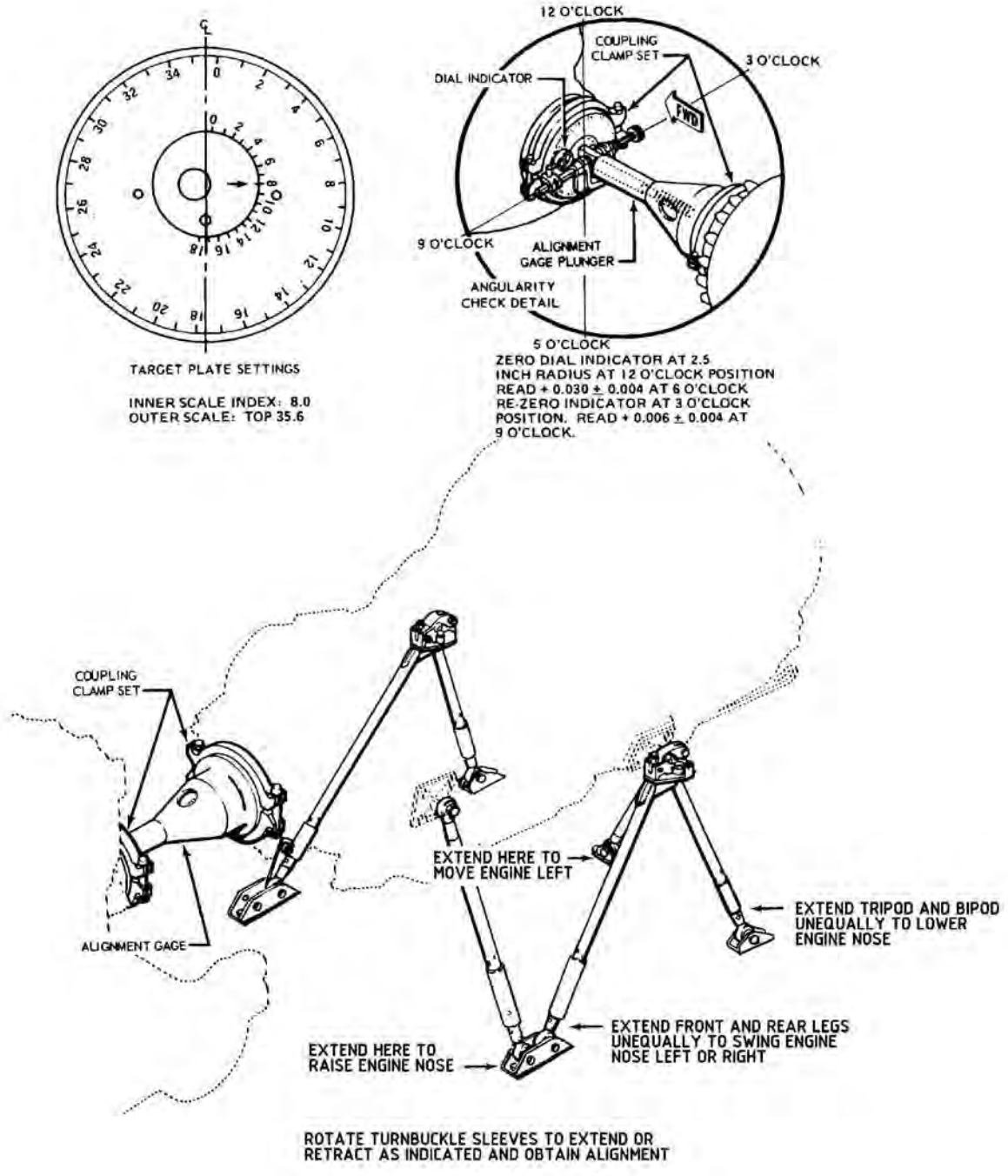

Figure 71-8. Use of Alignment Tool Set T101419

• COPYRIGHT © 2007 BY DART AEROSPACE LTD. •
THIS DOCUMENT IS PRIVATE AND CONFIDENTIAL AND IS SUPPLIED ON THE EXPRESS CONDITION THAT IT IS NOT TO BE USED FOR ANY PURPOSE OR COPIED OR COMMUNICATED TO ANY OTHER PERSON WITHOUT WRITTEN PERMISSION FROM DART AEROSPACE LTD.

71.2 COWLING AND FAIRINGS

71.2.1 Cowling and Fairings – General

Cowling and fairings are used to protect and provide easy maintenance access to engine compartment, intake and exhaust tailpipe areas, and top of main transmission.

71.2.2 Engine Cowling

Engine compartment between front and rear firewalls is covered by side and upper cowling assemblies. Each side cowl opens by swinging aft on hinges of rear firewall, and can be secured open by a folding strut snapped to a stud on fuselage. The upper cowl sections swing upward on hinges and are held open by rods. Flush type spring-locking latches provide closure.

Fixed work platforms are provided by walkways on cabin roof and by engine compartment deck under cowling. Steps for access are on each side of fuselage below engine and on right door post of cabin between crew door and cargo doors.

71.2.2.1 Removal – Engine Cowling

71.2.2.1.1 Disengage and open each side cowling. Pull pins from hinges on rear firewall to remove cowling sections.

71.2.2.1.2 Disengage upper cowl and raise to open position at each side.

71.2.2.1.3 Disconnect flexible duct and clamp from starter-generator cooling air intake on upper cowling.

71.2.2.1.4 Pull out pins at each end of beam to detach from firewall. Remove beam with upper cowl sections attached.

71.2.2.2 Inspection – Engine Cowling

71.2.2.2.1 Inspect cowling for cracks, dents and damage.

71.2.2.2.2 Inspect latches for serviceability.

71.2.2.3 Installation – Engine Cowling

71.2.2.3.1 Position upper cowling assembly. Align ends of beam in brackets on front and rear firewalls and install pins.

71.2.2.3.2 Engage support rods to hold upper cowling open.

71.2.2.3.3 Connect flexible duct from starter-generator to air intake on top of cowling. Secure duct with clamp.

71.2.2.3.4 Align side cowling sections to hinges on rear firewall and install hinge pins.

71.2.2.3.5 Close upper cowling, with support rods stowed in clips. Close side cowlings.

71.2.3 Engine Intake Faring

The engine air intake fairing is located above the cabin roof level and between the transmission fairing and the engine compartment cowling.

71.2.3.1 Removal – Engine Intake Fairing

71.2.3.1.1 Disengage fasteners around top of the intake fairing (3, Figure 71-9) and bottom of side louvers.

71.2.3.1.2 Remove intake fairing.

71.2.3.2 Inspection – Engine Intake Fairings

71.2.3.2.1 Inspect engine intake fairing (3, Figure 71-9) for dents, cracks, or other damage.

71.2.3.2.2 Inspect hinges, fittings, and fasteners for wear, damage, and serviceability.

• COPYRIGHT © 2007 BY DART AEROSPACE LTD. •
THIS DOCUMENT IS PRIVATE AND CONFIDENTIAL AND IS SUPPLIED ON THE EXPRESS CONDITION THAT IT IS NOT TO BE USED FOR ANY PURPOSE OR COPIED OR COMMUNICATED TO ANY OTHER PERSON WITHOUT WRITTEN PERMISSION FROM DART AEROSPACE LTD.

71.2.3.3 Installation – Engine Intake Fairing

71.2.3.3.1 Position intake fairing (3, Figure 71-9) on transmission and engine cowling.

71.2.3.3.2 Align and secure fasteners around top of fairing and bottom of side louvers.

71.2.4 Transmission Cowling

A one-piece transmission cowling covering the front and sides of the upper transmission area is secured by three latches and a hinge assembly. For access, the unlatched cowling can be swung forward to rest on cabin roof.

71.2.4.1 Removal – Transmission Cowling

71.2.4.1.1 Disengage three latches and swing cowling to the open position.

71.2.4.1.2 Detach hinge from two fittings on cabin roof by removing bolts with nuts and washers. Lift off cowling assembly. If hinge is detached from cowling, observe position of washers used for alignment for reassembly in the same manner.

71.2.4.2 Inspection – Transmission Cowling

71.2.4.2.1 Inspect cowling for dents, cracks or damage.

71.2.4.2.2 Inspect hinge and fittings for wear, damage, and serviceability.

71.2.4.3 Installation – Transmission Cowling

71.2.4.3.1 Position cowling hinge to fittings on cabin roof and install bolts with washers and nuts.

71.2.4.3.2 Swing cowling to closed position. Check alignment for secure latching and for clearance with control linkages or other parts on transmission pylon.

71.2.4.4 Transmission and Engine Cowling Adjustment

Adjustment of serrated hinges and adjustable rod ends should be accomplished with care and in such a manner that the cowling is not deformed.

71.2.5 Tailpipe Fairing

A three-piece fairing covers exhaust tailpipe area behind engine rear firewall, and is secured by cowl fasteners. An anti-collision light is mounted on top of upper fairing.

71.2.5.1 Removal – Tailpipe Fairing

71.2.5.1.1 Reach through door in lower left fairing and disconnect anti-collision light connector.

71.2.5.1.2 Open driveshaft cover which overlaps upper fairing. Release fasteners and remove upper and two lower tailpipe fairings.

71.2.5.2 Inspection – Tailpipe Fairing

71.2.5.2.1 Inspect for damage, cracks, and dents.

71.2.5.2.2 Inspect fasteners for serviceability.

71.2.5.3 Installation – Tailpipe Fairing

71.2.5.3.1 Install and fasten lower fairings and upper fairing. Close driveshaft cover.

71.2.5.3.2 Reach through door on lower left fairing and connect anti-collision light connector at deck.

• COPYRIGHT © 2007 BY DART AEROSPACE LTD. •
THIS DOCUMENT IS PRIVATE AND CONFIDENTIAL AND IS SUPPLIED ON THE EXPRESS CONDITION THAT IT IS NOT TO BE USED FOR ANY PURPOSE OR COPIED OR COMMUNICATED TO ANY OTHER PERSON WITHOUT WRITTEN PERMISSION FROM DART AEROSPACE LTD.

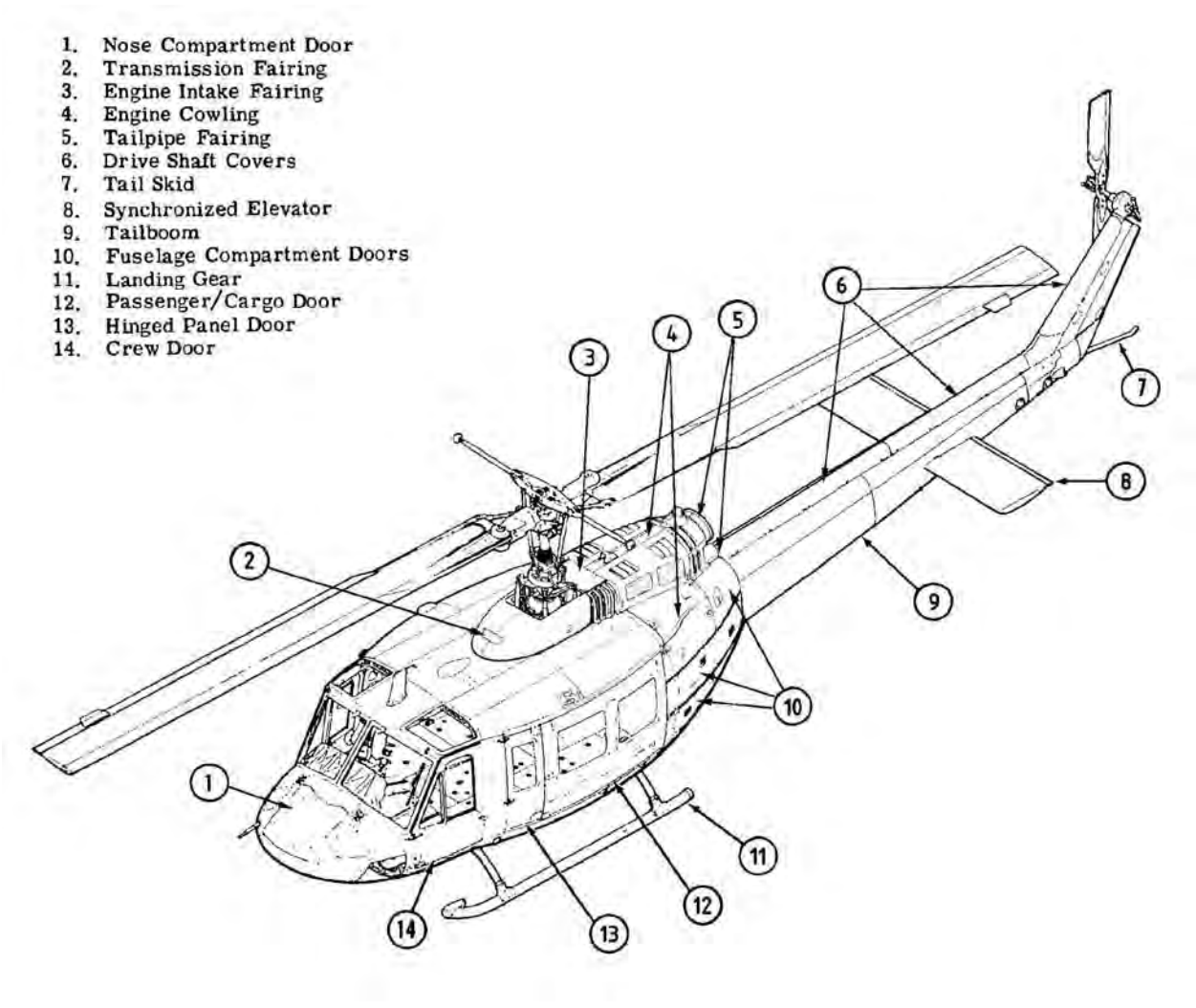

Figure 71-9. Location of Airframe Components

• COPYRIGHT © 2007 BY DART AEROSPACE LTD. •
THIS DOCUMENT IS PRIVATE AND CONFIDENTIAL AND IS SUPPLIED ON THE EXPRESS CONDITION THAT IT IS NOT TO BE USED FOR ANY PURPOSE OR COPIED OR COMMUNICATED TO ANY OTHER PERSON WITHOUT WRITTEN PERMISSION FROM DART AEROSPACE LTD.

71.3 ENGINE MOUNTS

71.3.1 Engine Mounts

The engine is supported on the service deck with one bipod and one tripod mount located on the right and left side of the engine combustor. A single forward support tube is located at forward left side of engine. A Turnbuckle Assembly is provided at each mount leg for engine alignment.

CAUTION

LEAVE DECK FITTINGS (11, FIGURE 71-10) IN PLACE EXCEPT WHEN REMOVAL IS REQUIRED FOR INSPECTION REPLACEMENT, ADJUST TURNBUCKLE ASSEMBLY TO CORRECT DRIVESHAFT ALIGNMENT.

Tools Required

- - -	Hoist
LTCT773	Engine Sling

71.3.1.1 Removal – Engine Mounts

71.3.1.1.1 Install LTCT773 engine sling.

71.3.1.1.2 Raise engine using a suitable hoist.

71.3.1.1.3 Remove bolts, washers, and nuts securing mounts (1, 10, and 12, Figure 71-10) to the airframe deck fittings (11).

71.3.1.1.4 Remove the 204-060-743-005 lever assembly from the D3684-041 mount assembly. Reference Figure 71-11.

71.3.1.2 Inspection – Engine Mounts

71.3.1.2.1 Inspect the tube assemblies and weld areas of the mount for cracks. If cracks are found, replace the mounts.

71.3.1.2.2 Inspect bolt threads and replace bolts as required.

71.3.1.2.3 Inspect rod end bearings for play as follows:

NOTE

Bipod mount and tripod mount use a double row type rod end bearing and axial play cannot be used to determine bearing condition.

71.3.1.2.3.1 Rod end bearings on the bipod mount and tripod mount must be replaced if radial wear exceeds 0.005 inch.

71.3.1.2.3.2 Rod end bearings on forward support tube must be replaced if radial wear exceeds 0.005 inch or axial wear exceeds 0.012 inch.

71.3.1.3 Installation – Engine Mounts

71.3.1.3.1 Check installation of deck fittings (11, Figure 71-10). Place rod ends of tripod mount (10) in three fittings at left and rear of deck. Install close tolerance bolts with washers under heads and nuts.

71.3.1.3.2 In similar manner, install bipod mount (1) in right deck fittings (11).

71.3.1.3.3 Install forward support tube (12) in the deck fitting (11).

71.3.1.3.4 Open bearing caps (8) on pillow blocks. Lower engine to seat main trunnion bearings. Close bearing caps and secure with latching eyebolts (5).

71.3.1.3.5 Align rod end of forward support tube (12) on forward left trunnion fitting and install retaining bolt (14) with washer. Torque retaining bolt (14) 50 to 60 inch-pounds. Secure bolt head to upper aft bolt of trunnion with lockwire (C-405).

71.3.1.3.6 Remove LTCT773 engine sling.

• COPYRIGHT © 2007 BY DART AEROSPACE LTD. •
THIS DOCUMENT IS PRIVATE AND CONFIDENTIAL AND IS SUPPLIED ON THE EXPRESS CONDITION THAT IT IS NOT TO BE USED FOR ANY PURPOSE OR COPIED OR COMMUNICATED TO ANY OTHER PERSON WITHOUT WRITTEN PERMISSION FROM DART AEROSPACE LTD.

71.3.1.3.7 Accomplish main driveshaft alignment check, if required. (Refer to paragraph 71.1.1.3.)

71.3.1.3.8 Install 204-060-743-005 lever assembly on D3684-041 mount. See Figure 71-11.

71.3.1.4 Bearing Replacement

71.3.1.4.1 D3688-047 and D3691-041 stud assemblies (which include the rod end bearings) are to be replaced as complete assemblies only per Section 71.3.1.5.

71.3.1.5 Stud Replacement

71.3.1.5.1 After removing the affected engine mount from the aircraft per Section 71.3.1.1, remove the HL32PB8-14 Hi-Lok Pins and HL86-8 Hi-Lok Collars from the affected stud and discard them.

71.3.1.5.2 Remove the damaged stud from the assembly.

71.3.1.5.3 Ensure the stud threads are well lubricated with TECTYL 502C Class I, MIL-PRF-16173E Grade 2 (or equivalent) anti-seize compound on threads.

71.3.1.5.4 Install the replacement stud on the mount assembly carefully aligning the assembly holes. Using a #08-630 drill (0.247 dia.) enlarge the assembly holes in the replacement stud. Ream the holes using a #44-350 step reamer (0.2621 dia./0.2470 pilot). Disassemble the stud and clean and deburr the holes. Reassemble the stud using Hysol EA934NA or Magnabond 6398 adhesive and install oversized HL36PB8-14 Hi-lok pins and HL87-8 Hi-Lok collars.

71.3.1.5.5 D3688-047 and D3691-041 stud assemblies (which include the rod end bearings) are to be replaced as complete assemblies only.

71.3.1.5.6 Complete engine mount re-installation per Section 71.3.1.3.

• COPYRIGHT © 2007 BY DART AEROSPACE LTD. •
THIS DOCUMENT IS PRIVATE AND CONFIDENTIAL AND IS SUPPLIED ON THE EXPRESS CONDITION THAT IT IS NOT TO BE USED FOR ANY PURPOSE OR COPIED OR COMMUNICATED TO ANY OTHER PERSON WITHOUT WRITTEN PERMISSION FROM DART AEROSPACE LTD.

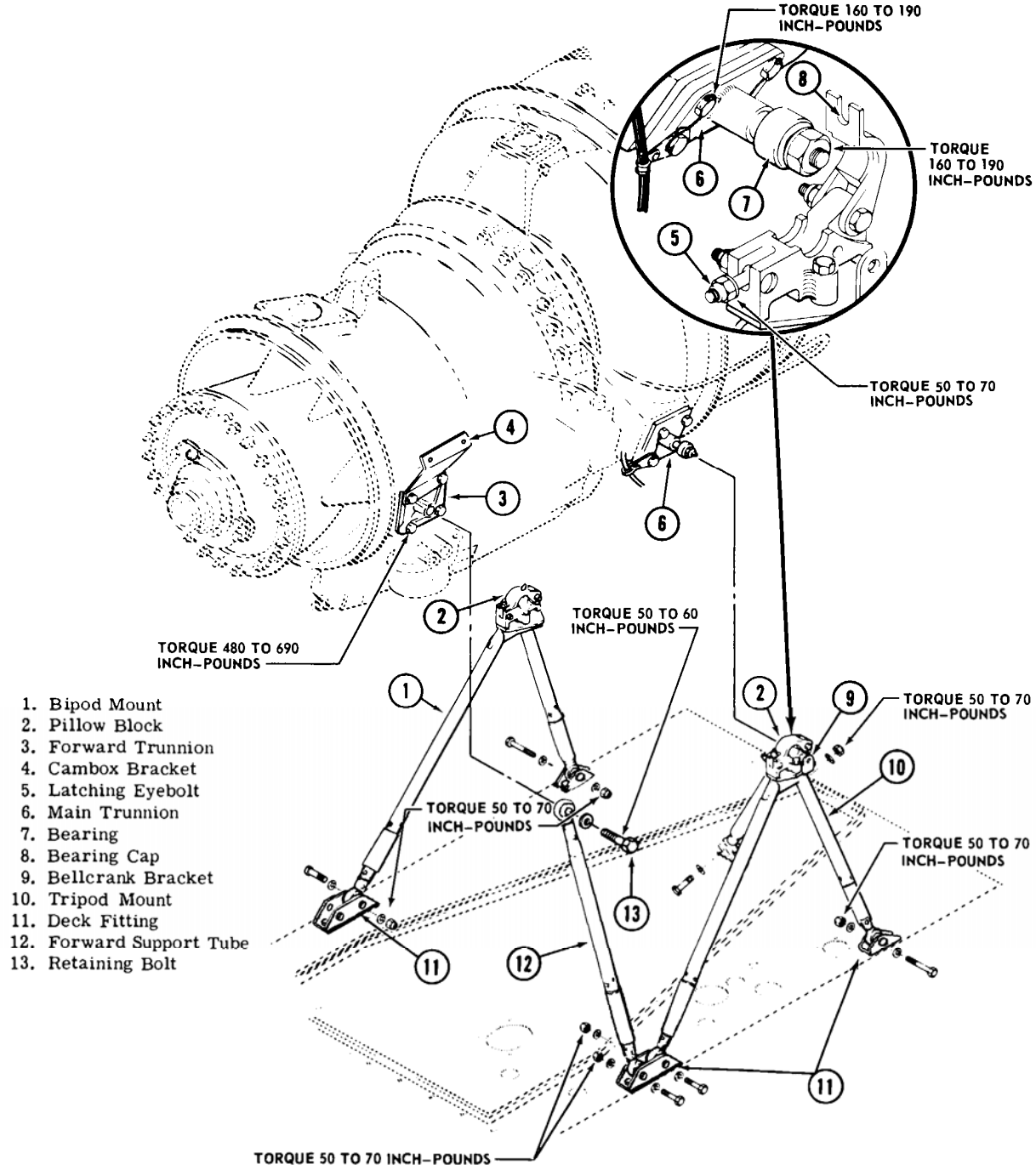

Figure 71-10. Engine Mounts

• COPYRIGHT © 2007 BY DART AEROSPACE LTD. •
THIS DOCUMENT IS PRIVATE AND CONFIDENTIAL AND IS SUPPLIED ON THE EXPRESS CONDITION THAT IT IS NOT TO BE USED FOR ANY PURPOSE OR COPIED OR COMMUNICATED TO ANY OTHER PERSON WITHOUT WRITTEN PERMISSION FROM DART AEROSPACE LTD.

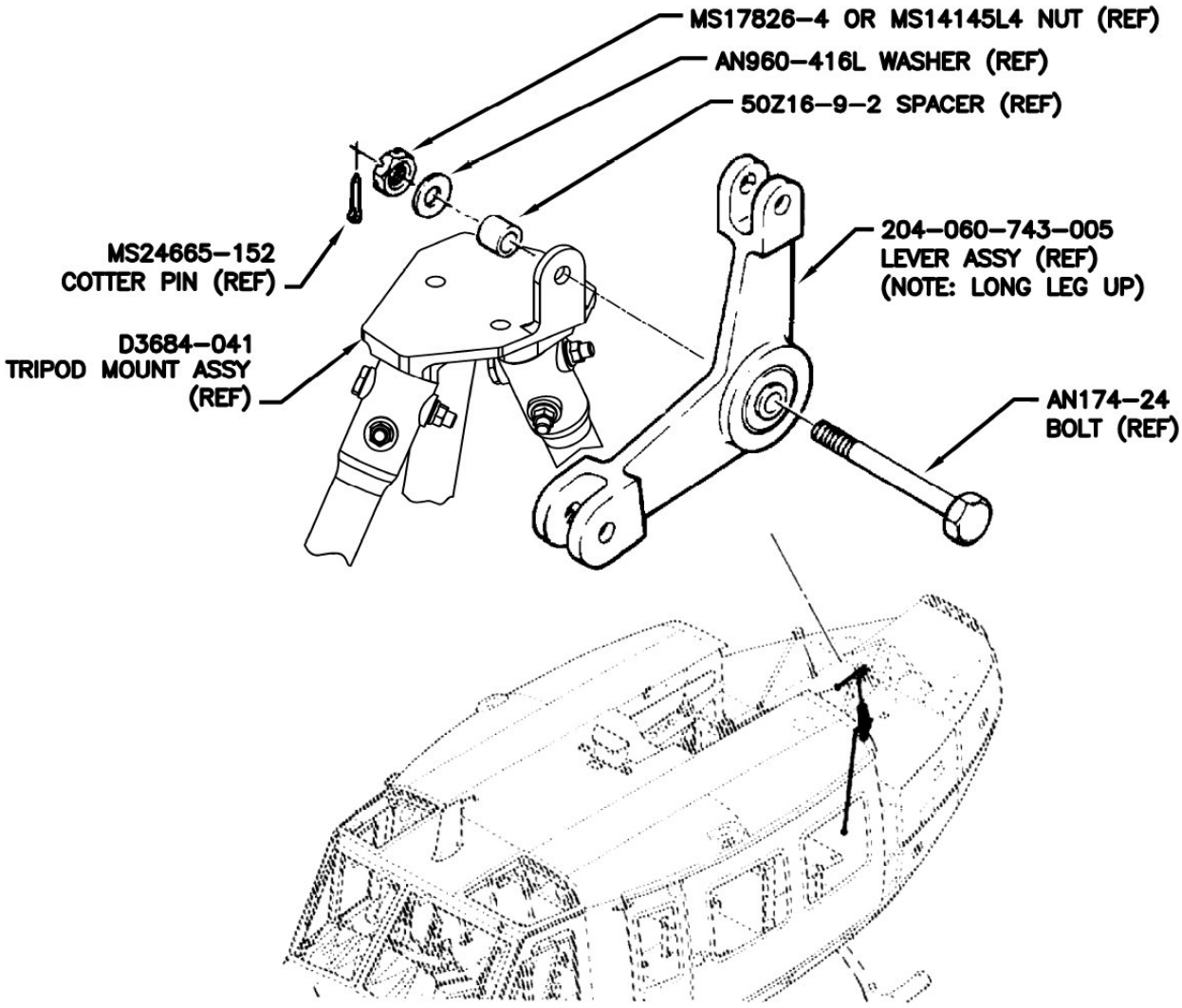

Figure 71-11. 204-060-743-005 Lever Assembly Installation Detail

• COPYRIGHT © 2007 BY DART AEROSPACE LTD. •
THIS DOCUMENT IS PRIVATE AND CONFIDENTIAL AND IS SUPPLIED ON THE EXPRESS CONDITION THAT IT IS NOT TO BE USED FOR ANY PURPOSE OR COPIED OR COMMUNICATED TO ANY OTHER PERSON WITHOUT WRITTEN PERMISSION FROM DART AEROSPACE LTD.

71.4 POWER PLANT BUILDUP

71.4.1 Remove engine from shipping container in accordance with the following:

71.4.1.1 Release air pressure from engine shipping container.

71.4.1.2 Remove container lid attaching bolts around center of shipping container.

71.4.1.3 Attach suitable sling to engine lifting lugs

71.4.1.4 Attach cable hoist to engine lifting sling.

71.4.1.5 Remove mounting bolts retaining engine adapter mounts to shipping container.

71.4.1.6 Lift engine free of shipping container. Remove lockwire and shipping adapter mounts from engine.

71.4.1.7 Remove drain plug from lower section of fuel control and allow to drain.

71.4.1.8 Install engine in suitable build-up stand.

71.4.2 Remove from the old engine the following parts for reinstallation of the new engine.

71.4.2.1 Firewall.

71.4.2.2 Tailpipe.

71.4.2.3 Igniters.

71.4.2.4 Bleed air adapter.

71.4.2.5 Engine mount fitting.

71.4.2.6 Trunnion, cambox, and bracket.

71.4.2.7 Throttle governor lever.

71.4.2.8 Fuel control arm.

71.4.2.9 Linear actuator.

71.4.2.10 Power turbine tachometer generator

71.4.2.11 Torque pressure transmitter bracket

71.4.2.12 Engine fittings and tubes (power governor).

71.4.2.13 Oil pressure transmitter

71.4.2.14 Oil pressure switch

71.4.2.15 Engine tubing (oil pressure transmitter)

71.4.2.16 Starter-generator

71.4.2.17 Gas producer tachometer generator

71.4.2.18 Torque pressure transmitter and tubes.

71.4.2.19 Flexible hoses.

71.4.2.20 Electrical harness.

71.4.2.21 Output driveshaft adapter.

NOTE: Inspect lines thoroughly for evidence of leaking, contamination, chafing, or heat damage.

71.4.3 Install parts on new engine as follows:

71.4.3.1 Install firewall as follows:

71.4.3.1.1 Position firewall on rear of engine combustion section. Position band clamp (Item 1, Figure 71.1) and bolts at 2:00 and 8:00 of engine.

71.4.3.1.2 While tapping around band clamp with mallet, torque clamp nut 100 to 130 inch-pounds.

• COPYRIGHT © 2007 BY DART AEROSPACE LTD. •
THIS DOCUMENT IS PRIVATE AND CONFIDENTIAL AND IS SUPPLIED ON THE EXPRESS CONDITION THAT IT IS NOT TO BE USED FOR ANY PURPOSE OR COPIED OR COMMUNICATED TO ANY OTHER PERSON WITHOUT WRITTEN PERMISSION FROM DART AEROSPACE LTD.

71.4.3.2 Install tailpipe as follows:

71.4.3.2.1 Position tailpipe onto rear of combustion section. Align dowel pins on rear face of combustion section to matching indents in face of mounting flange of tailpipe. Locate band clamp and bolt to bottom and top centerline of engine.

71.4.3.2.2 While tapping around band clamp with mallet, torque clamp nut 100 to 130 inch-pounds.

71.4.3.3 Install igniters as follows:

71.4.3.3.1 Connect four igniter leads to respective igniter plugs.

71.4.3.3.2 Tighten and secure with shear wire (C-414).

71.4.3.4 Install bleed air adapter as follows:

71.4.3.4.1 Remove four bolts attaching bleed air adapter cover and remove cover

71.4.3.4.2 Install gasket supplied on engine.

71.4.3.4.3 Position bleed air adapter on bleed air tube with hose coupling nipple facing the front of the engine. Bleed air fitting may be positioned from level forward to 45 degrees up as required to clear other engine accessories.

71.4.3.4.4 Install four washers and four bolts,

71.4.3.4.5 Secure bolts in pairs with lockwire (C-405).

71.4.3.5 Install engine mounting fittings as follows:

71.4.3.5.1 Install mount fitting on left rear side of engine.

71.4.3.5.2 Install four washers and four bolts securing the fitting to the engine,

71.4.3.5.3 Torque bolts 160 to 190 inch-pounds and lockwire (C-405).

71.4.3.5.4 Check trunnion mount bearings prior to installation for 0.010 inch maximum axial play between ball and race. If bearings play is greater than these values, replace bearings,

71.4.3.5.5 Position the bearing on the engine mount fitting. Install washer and nut.

71.4.3.5.6 Torque nut 160 to 190 inch-pounds.

71.4.3.5.7 Install procedures for right side mount fitting are identical to left fitting. Install the right fitting using steps (1) through (3).

71.4.3.6 Install trunnion, cambox, and bracket as follows:

71.4.3.6.1 Paint mating surfaces of trunnion and engine with primer (C-201 or C-204).

71.4.3.6.2 Place trunnion into position on lower left side of engine,

71.4.3.6.3 Position oil pressure transmitter and bracket on trunnion, the transmitter mounting hole provision facing aft of engine,

71.4.3.6.4 Align lower bolt holes of bracket and trunnion with mounting holes of engine.

71.4.3.6.5 Install two lower bolts with washers through bracket and trunnion.

71.4.3.6.6 Position cambox on trunnion, aligning mounting holes on cambox with upper mounting holes of trunnion. Install two bolts with two washers.

71.4.3.6.7 Torque mounting bolts 480 to 560 inch-pounds.

71.4.3.6.8 Secure bolt heads in pairs with lockwire (C-405).

• COPYRIGHT © 2007 BY DART AEROSPACE LTD. •
THIS DOCUMENT IS PRIVATE AND CONFIDENTIAL AND IS SUPPLIED ON THE EXPRESS CONDITION THAT IT IS NOT TO BE USED FOR ANY PURPOSE OR COPIED OR COMMUNICATED TO ANY OTHER PERSON WITHOUT WRITTEN PERMISSION FROM DART AEROSPACE LTD.

71.4.3.7 Install throttle governor lever as follows:

71.4.3.7.1 Position governor shaft at mid point between stops.

71.4.3.7.2 Install governor lever on shaft splines vertical to engine center line.

71.4.3.7.3 Install bolt in lever and lockwire (C-405).

71.4.3.8 Install fuel control arm (power lever) as follows:

71.4.3.8.1 Install arm on power lever control shaft of fuel control. Install fuel control arm parallel to fuel control pointer.

71.4.3.8.2 Install locking screw and lockwire (C-405).

71.4.3.9 Install linear actuator as follows:

71.4.3.9.1 Attach linear actuator rod end bearing to governor lever using bolt, washer, nut, and cotter pin. Washer may be used to shim rod end to governor lever clevis.

71.4.3.9.2 Connect clevis end of linear actuator rod to cambox rod end with bolt head up. Insert spring washer inside clevis beneath cambox rod end. Install washer and nut on bolt.

71.4.3.9.3 Tighten nut finger tight plus one castellation, if necessary, to facilitate installation of cotter pin,

71.4.3.10 Install power turbine tachometer generator as follows:

71.4.3.10.1 Remove cover for turbine tachometer generator, located on governor and turbine generator gearbox on left upper side of engine

71.4.3.10.2 Clean splines of tachometer generator and drive splines with solvent (C-304). Pack drive splines with lubricant (C-012).

71.4.3.10.3 Install gasket using engine supplied hardware; install turbine tachometer generator with electrical receptacle toward top of engine,

71.4.3.11 Install torque pressure transmitter bracket as follows:

71.4.3.11.1 Position bracket on mounting provided on forward right side of inlet housing of engine,

71.4.3.11.2 Align transmitter mounting hole in bracket facing aft of engine.

71.4.3.11.3 Install four mounting bolts with four washers.

71.4.3.11.4 Torque bolts 480 to 560 inch-pounds and secure in pairs with lockwire (C-405).

71.4.3.12 Install engine fittings and tube as follows:

71.4.3.12.1 Install reducer fitting with packing in governor seal drain hose, located on forward top section of power governor.

71.4.3.12.2 Install T fitting with locking nut and packing into fuel pump seal drain port located on lower side, forward on fuel control.

71.4.3.12.3 Install tube assembly between fittings installed in steps (1) and (2).

71.4.3.12.4 Install restrictor fitting with locking nut and packing into oil filter located on lower side of engine.

71.4.3.12.5 Install two fuel pressure switches with packing into the two pressure taps on lower section of fuel control. Secure with shearwire (C-414).

71.4.3.12.6 Remove shipping plugs from fuel control inlet pressure taps and starter-generator pad on lower side.

71.4.3.12.7 Install plugs with packing into

• COPYRIGHT © 2007 BY DART AEROSPACE LTD. •
THIS DOCUMENT IS PRIVATE AND CONFIDENTIAL AND IS SUPPLIED ON THE EXPRESS CONDITION THAT IT IS NOT TO BE USED FOR ANY PURPOSE OR COPIED OR COMMUNICATED TO ANY OTHER PERSON WITHOUT WRITTEN PERMISSION FROM DART AEROSPACE LTD.

ports. Tighten securely and lockwire (C-405).

71.4.3.12.8 Install reducer fitting with packing into starter-generator pad drive seal drain port located on lower side forward of starter-generator.

71.4.3.12.9 Install elbow fitting with packing into outlet port of engine oil pump. Position fitting outlet 90 degrees down from engine center line and torque locking nut 300 to 325 inch-pounds.

71.4.3.12.10 Install fitting with packing into inlet port of oil pump.

71.4.3.12.11 Install union fitting with packing into engine breather port located on lower right side of inlet housing of engine.

71.4.3.12.12 Install elbow fitting with locking nut and packing into engine torque pressure vent pad, located adjacent to starter-generator drive pad.

71.4.3.12.13 Install torque pressure restrictor fitting into pressure port located on right side forward of engine inlet housing.

71.4.3.12.14 Remove snap-ring, plug and packing from anti-icing system pressure switch (10) mounting provision on top of engine inlet housing.

71.4.3.12.15 Install pressure switch in existing port using engine furnished hardware and packing.

71.4.3.13 Install oil pressure transmitter as follows:

71.4.3.13.1 Position oil pressure transmitter on mounting bracket with electrical receptacle toward the front of the engine,

71.4.3.13.2 Tighten lock nut and lockwire (C-405).

71.4.3.13.3 Install T fitting, lock-nut and packing on pressure port of transmitter.

71.4.3.14 Install oil pressure switch as follows:

71.4.3.14.1 Position oil pressure switch on oil pressure transmitter mounting bracket with electrical receptacle vertical to engine center line.

71.4.3.14.2 Mount switch to bracket with clamp, screw, washer, and nut.

71.4.3.15 Install engine tubing as follows:

71.4.3.15.1 Install oil tube assembly between oil pressure transmitter T fitting and elbow fitting on oil pressure port at oil strainer.

71.4.3.15.2 Install tube assembly between oil pressure switch and oil transmitter T fitting.

71.4.3.15.3 Install tube assembly between governor bleed elbow fitting on power governor and union fitting connection to lower governor bleed hose. Position shroud over connection and secure with clamp.

71.4.3.15.4 Attach clamp support on the top left case bolt of the accessory drive gearbox. Secure governor bleed tube assembly to support using clamp, screw, nut, and washer.

71.4.3.15.5 Attach clamp support to lower outboard mounting bolt of turbine tachometer generator. Secure governor bleed tube assembly to clamp support using clamp, nut, washer, and screw.

71.4.3.16 Install starter-generator as follows:

71.4.3.16.1 Using existing hardware and gasket for installation.

71.4.3.16.2 Install cooling air exhaust shroud on rear of starter generator. Position flat side of shroud down in respect to engine center line for maximum clearance of the tail rotor driveshaft housing. Tighten locking screws and lockwire.

• COPYRIGHT © 2007 BY DART AEROSPACE LTD. •
THIS DOCUMENT IS PRIVATE AND CONFIDENTIAL AND IS SUPPLIED ON THE EXPRESS CONDITION THAT IT IS NOT TO BE USED FOR ANY PURPOSE OR COPIED OR COMMUNICATED TO ANY OTHER PERSON WITHOUT WRITTEN PERMISSION FROM DART AEROSPACE LTD.

71.4.3.16.3 Install cooling air inlet shroud on starter-generator with the flanged side toward the mounting flange of the generator. Move shroud to rear of generator to expose the elongated mounting holes in the flange of the starter-generator.

71.4.3.16.4 Clean splines of starter-generator and drive splines with solvent (C-304). Pack drive splines with lubricant (C-012).

71.4.3.16.5 Place starter-generator on splines of drive pad and mounting studs; rotate to position terminal connectors to extreme left side of engine. Starter terminal block will be located on the left side just below the fuel control inlet. The fuel control inlet line must be removed from the fuel control for terminal block clearance.

71.4.3.16.6 Lower starter-generator onto splines, mounting bolts and nuts. Turn generator counterclockwise to lock in end of elongated flange mounting holes.

71.4.3.16.7 Secure starter-generator mounting nuts and torque 160 to 190 inch-pounds.

71.4.3.16.8 Position cooling air intake shroud over air inlet ports on starter-generator and secure with two bolts.

71.4.3.17 Install gas producer tachometer generator as follows:

71.4.3.17.1 Clean splines of tachometer generator and drive splines with solvent (C-304). Pack drive splines with lubricant (C-012).

71.4.3.17.2 Install tachometer generator using engine supplied hardware and gasket, on drive pad, position electrical receptacle to the right side of engine. The gas producer tachometer generator may be installed with the electrical receptacle on the top side to enable the electrical connector to reach if the wiring is too short.

71.4.3.17.3 Install four mounting nuts and torque 50 to 70 inch-pounds.

71.4.3.18 Install torque pressure transmitter and tubes as follows:

71.4.3.18.1 Install torque pressure transmitter in bracket with electrical receptacle toward front of engine.

71.4.3.18.2 Lock into position with locking nut and lockwire (C-405).

71.4.3.18.3 Install elbow fitting in vent port on rear of transmitter.

71.4.3.18.4 Install elbow fitting in pressure port on front of transmitter.

71.4.3.18.5 Connect torque pressure tube assembly between torque pressure transmitter pressure port fitting and torque pressure fitting on engine inlet housing section.

71.4.3.18.6 Install tube assembly between vent port elbow fitting of transmitter and engine vent pad elbow fitting located on forward lower right side.

71.4.3.19 Install flexible hose as follows:

71.4.3.19.1 Connect combustion chamber drain hose) to drain fitting located on the bottom of engine combustion chamber.

71.4.3.19.2 Connect governor seal drain hose to T fitting located on lower forward side of fuel control.

71.4.3.19.3 Connect the 45 degree fitting of the starter-generator seal drain hose to fitting on pad drain positioned aft of engine center line.

71.4.3.19.4 Connect power governor bleed hose to union fitting at lower end of governor bleed tube. Position shroud over connection and secure with clamp.

71.4.3.19.5 Connect engine bleed air hose (Item 3, Figure 71.1) elbow fitting to bleed air

• COPYRIGHT © 2007 BY DART AEROSPACE LTD. •
THIS DOCUMENT IS PRIVATE AND CONFIDENTIAL AND IS SUPPLIED ON THE EXPRESS CONDITION THAT IT IS NOT TO BE USED FOR ANY PURPOSE OR COPIED OR COMMUNICATED TO ANY OTHER PERSON WITHOUT WRITTEN PERMISSION FROM DART AEROSPACE LTD.

adapter located at top of engine, forward of the combustion chamber. Route the hose assembly aft and downward across the combustion chamber. Secure hose to combustion chamber section using engine supplied hardware and clamps.

71.4.3.19.6 Connect engine breather hose, end fitting to engine breather port union fitting, located at lower right side of engine compressor section.

71.4.3.19.7 Connect tank to engine oil inlet hose, to union fitting in inlet port of engine oil pump located at lower right side of the compressor section of engine.

71.4.3.19.8 Connect engine oil outlet hose, to the elbow fitting in the outlet port of the engine oil pump located at lower side of the engine compressor section. Torque hose-to-fitting locking nut 750 to 850 inch-pounds. Position shroud over connection and secure with clamp.

71.4.3.19.9 Connect fuel inlet hose elbow fitting to fuel inlet port union fitting of fuel control. Position shroud over connection and secure with clamp.

71.4.3.19.10 Connect tailpipe drain hose to lower fitting of tailpipe.

71.4.3.20 Install electrical harness as follows: The electrical harness is installed as per the Installation Instructions IIN-D212-725.

71.4.3.21 Install output driveshaft adapter. (Refer to Chapter 66)

• COPYRIGHT © 2007 BY DART AEROSPACE LTD. •
THIS DOCUMENT IS PRIVATE AND CONFIDENTIAL AND IS SUPPLIED ON THE EXPRESS CONDITION THAT IT IS NOT TO BE USED FOR ANY PURPOSE OR COPIED OR COMMUNICATED TO ANY OTHER PERSON WITHOUT WRITTEN PERMISSION FROM DART AEROSPACE LTD.

CHAPTER 76
ENGINE CONTROLS
(76-00-00)

• COPYRIGHT © 2007 BY DART AEROSPACE LTD. •
THIS DOCUMENT IS PRIVATE AND CONFIDENTIAL AND IS SUPPLIED ON THE EXPRESS CONDITION THAT IT IS NOT TO BE USED FOR ANY PURPOSE OR COPIED OR COMMUNICATED TO ANY OTHER PERSON WITHOUT WRITTEN PERMISSION FROM DART AEROSPACE LTD.

TABLE OF CONTENTS

List of Figures 2
76.1 Engine Controls 3
76.1.1 Engine Controls 3
76.2 Droop Compensator Controls 3
76.2.1 Droop Compensator Controls 3
76.2.2 Cambox and Linear Actuator 9
76.3 Power Lever Controls 11
76.3.1 Power Lever Controls 11
76.3.1.1 Power Lever Control System 11
76.3.1.2 Rigging – Power Lever Controls 11
76.3.1.3 Removal – Power Lever Controls 13
76.3.1.4 Cleaning – Power Lever Controls 14
76.3.1.5 Inspect – Power Lever Controls 14
76.3.1.6 Repair/Replace – Power Lever Controls 14
76.3.1.7 Installation – Power Lever Controls 14
76.3.2 Flight Idle Solenoid 18
76.3.2.1 Removal – Flight Idle Solenoid 18
76.3.2.2 Installation – Flight Idle Solenoid 19
76.3.2.3 Rigging – Flight Idle Solenoid 19
76.3.3 UpTrim for the T5317 Engine 19

LIST OF FIGURES

Figure 76-1. Droop Compensator Controls 7
Figure 76-2. Rigging N2 Governor Actuator (Sheet 1 of 2) 8
Figure 76-2. Rigging N2 Governor Actuator (Sheet 2 of 2) 9
Figure 76-3. Power Lever (N1) Controls Rigging (Sheet 1 of 3) 16
Figure 76-3. Power Lever Control System (Sheet 2 of 3) 17
Figure 76-3. Power Lever (N1) Control Rigging (Sheet 3 of 3) 18
Figure 76-4. Fuel Control Adjustments 21

• COPYRIGHT © 2007 BY DART AEROSPACE LTD. •
THIS DOCUMENT IS PRIVATE AND CONFIDENTIAL AND IS SUPPLIED ON THE EXPRESS CONDITION THAT IT IS NOT TO BE USED FOR ANY PURPOSE OR COPIED OR COMMUNICATED TO ANY OTHER PERSON WITHOUT WRITTEN PERMISSION FROM DART AEROSPACE LTD.

76.1 ENGINE CONTROLS

76.1.1 Engine Controls

The engine controls consist of the droop compensator controls and the power lever controls. The linkage in the droop compensator system operates from a bellcrank of the collective pitch system. The power lever controls are operated from a twist grip on the collective stick.

76.2 DROOP COMPENSATOR CONTROLS

76.2.1 Droop Compensator Controls

Engine power turbine speed (N2 rpm) is controlled through the overspeed governor by means of a linear actuator and a droop compensator cambox control. The droop compensator linkage consists of tube assemblies, torque tube, mount assemblies, cambox assembly, and linear actuator. A GOV RPM INCR/DECR switch on the pilots collective pitch control stick electrically operates the linear actuator. The actuator moves an engine fuel control lever (governor shaft) to change settings of the power turbine rpm. The droop compensator installation stabilizes rpm as power plant load fluctuates with changes in main rotor pitch.

NOTE

Bellcrank (6, Figure 76-1) is attached to torque tube (4) by means of a shear pin (7), which is designed to shear to allow unhindered operation of the collective pitch controls if the compensator linkage should malfunction.

76.2.1.1 Rigging – Droop Compensator Controls

76.2.1.1.1 Ensure that the collective pitch control system is fully rigged.

76.2.1.1.2 Complete the droop compensator installation less the following items or connections:

76.2.1.1.2.1 Control lever (16, Figure 76-1).

76.2.1.1.2.2 Hardware connecting actuator (15) to control lever (16).

76.2.1.1.2.3 Hardware connecting bellcrank of cambox (14) to adjustable control tube (12).

76.2.1.1.3 Set bellcrank of cambox (14) to center of slot within 0.06 inch (1.52 mm) as follows: (Refer to detail C, Figure 76-2).

76.2.1.1.3.1 Loosen nut to allow free movement of lockwasher.

76.2.1.1.3.2 Center bellcrank adjustment bolt in slot.

76.2.1.1.4 Using the adjustment screw or screws (detail A, Figure 76-2) of linear actuator adjust the stroke length as follows:

76.2.1.1.4.1 Electrically position actuator shaft to approximately midpoint of stroke, by operating GOV RPM switch on collective control lever.

76.2.1.1.4.2 If actuator with two adjusting screws is installed, turn both positive stop adjusting screws to obtain maximum stroke. (Refer to detail A.) Reduce stroke by turning each screw ten full turns away from maximum adjustment to obtain actuator nominal position.

76.2.1.1.4.3 If actuator with single adjusting screw is installed, it is not necessary to adjust positive stop screw to obtain nominal position. Positive stops can be adjusted, if necessary, for travel of 0.50 to 1.75 inch (1.27 to 44.45 mm) without change in nominal position.

NOTE

One full turn of the adjusting screw will cause a change in both the retract and extend position of 0.032 inch. (Refer to detail A.)

• COPYRIGHT © 2007 BY DART AEROSPACE LTD. •
THIS DOCUMENT IS PRIVATE AND CONFIDENTIAL AND IS SUPPLIED ON THE EXPRESS CONDITION THAT IT IS NOT TO BE USED FOR ANY PURPOSE OR COPIED OR COMMUNICATED TO ANY OTHER PERSON WITHOUT WRITTEN PERMISSION FROM DART AEROSPACE LTD.

76.2.1.1.4.4 Set actuator travel to 0.50 inches (1.27 mm).

76.2.1.1.4.5 When actuator travel has been completed, electrically move the actuator to the retracted (full increase) position.

76.2.1.1.5 Adjust the engine governor stop screws as follows:

76.2.1.1.5.1 Adjust upper governor stop screw to 0.210 inch measured from inner side of mounting boss.

NOTE
Remove and discard lead seal lockwire, if existing.

76.2.1.1.5.2 Adjust lower stop screw until no less than 0.060 inch (1.524 mm) protrudes from the screw mounting boss. (Refer to detail B, Figure 76-2.)

76.2.1.1.6 Adjust cam slot setting as follows:

76.2.1.1.6.1 Lock collective control lever in full down position.

76.2.1.1.6.2 Set the cam slot to be visible below the cambox housing by 0.38 inch (9.65 mm). Secure in this position.

76.2.1.1.6.3 Adjust control tube (2, Figure 76-1) so 0.020 shear wire will not pass through inspection hole of tube. Install bolt, washers and nut on bellcrank (6) and control tube (2).

NOTE
Ensure safety hole in rod end is completely covered.

76.2.1.1.6.4 Hold cam slot setting as set in step 76.2.1.1.6.2, adjust control tube (12) to fit bellcrank of cambox.

76.2.1.1.7 Adjust control lever (16) as follows:

76.2.1.1.7.1 Lock collective control stick in full up position.

76.2.1.1.7.2 Electrically operate the actuator (15) to full increase position.

76.2.1.1.7.3 Adjust rod end of actuator (15) to mid position.

76.2.1.1.7.4 If preloading exists between cambox (14) and control lever (16), loosen the cambox bracket (13) attaching bolts and adjust cambox (14) as required.

76.2.1.1.7.5 Set governor stop arm 0.010 inch (0.254 mm) from upper stop. Position control lever (16) on governor control shaft (17), at nearest serration, to align with rod end of actuator (15). Adjust rod end of actuator (15) to align with bolt hole of lever (16) and provide the 0.010 inch (0.254 mm) clearance at upper stop. Install bolt, washers, and nut on control lever (16) and rod end of actuator (15).

76.2.1.1.7.6 Center actuator rod end in clevis of lever so self-aligning bearing will absorb rotation of shaft. Tighten jamnut.

76.2.1.1.7.7 Tighten all jamnuts, replace all lockwire, cotter pins and secure all adjustable points.

76.2.1.1.7.8 Lock collective stick in full down position, extend the actuator (15) to full decrease, and set the lower governor stop screw to no less than 0.010 inch (0.254 mm) clearance from the stop arm.

76.2.1.1.8 On initial ground run, with collective control lever in full down position, check for 97 percent to 101% ± 0.8% rpm range controlled by GOV RPM switch.

NOTE
Cam compensator installation should maintain 100% ± 0.6% N2 from flat pitch to full power.

76.2.1.1.9 After preliminary rigging by preceding steps, the final rigging adjustment will

• COPYRIGHT © 2007 BY DART AEROSPACE LTD. •
THIS DOCUMENT IS PRIVATE AND CONFIDENTIAL AND IS SUPPLIED ON THE EXPRESS CONDITION THAT IT IS NOT TO BE USED FOR ANY PURPOSE OR COPIED OR COMMUNICATED TO ANY OTHER PERSON WITHOUT WRITTEN PERMISSION FROM DART AEROSPACE LTD.

be made as required in ground run or flight:

76.2.1.1.9.1 Readjust actuator stroke as necessary to maintain 97% to 101.5% ± 0.75% range with collective stick full down.

76.2.1.1.9.2 Set the cam to maintain 100% ± 0.6% N2 percent. (Engine Output Shaft RPM) from flat pitch to full power.

76.2.1.1.9.3 If RPM droop occurs, rotate cam counterclockwise toward maximum compensation. If maximum cam compensation does not correct RPM droop, shorten tube (12). Cam shall not bottom on cam follower, either full up or full down collective. If RPM overspeeds, rotate cam clockwise.

CAUTION

ANY ADJUSTMENT AFTER PRELIMINARY RIGGING WILL REQUIRE RECHECK AND ADJUSTMENT FOR PROPER CLEARANCE OF GOVERNOR STOP SCREWS.

76.2.1.2 Removal – Droop Compensator Controls.

76.2.1.2.1 Open engine compartment cowling on left side.

76.2.1.2.2 Remove actuator (15, Figure 76-1).

NOTE

Place actuator in dust proof container until required for further operations.

76.2.1.2.3 When control lever (16) is to be removed for engine change, remove lockwire, loosen bolt, and lift from serrated shaft of overspeed governor.

76.2.1.2.4 Remove control tube (12) from bellcrank of cambox (14) and from aft end of torque tube (4) by removing cotter pins, nuts, washer, and bolts.

76.2.1.2.5 Remove bellcrank (6), torque tube (4), and associated parts as follows:

76.2.1.2.5.1 Remove access cover on left side of pylon island to gain access for operations.

76.2.1.2.5.2 Remove control tube (2) from collective pitch bellcrank (1) and bellcrank (6) by removing cotter pins, nuts, washers, and bolts.

76.2.1.2.5.3 Remove nut and washer from forward end of torque tube (4).

76.2.1.2.5.4 Remove bracket assembly (3) from structural support by removing three nuts, six washers, and three bolts.

76.2.1.2.5.5 Remove retaining washer (9), shims (8), shear pin (7), and bellcrank (6) from shear fitting (5).

76.2.1.2.5.6 Slide torque tube (4) forward to free from bearing in support (11), then slide aft through firewall seal (10).

76.2.1.2.5.7 Remove support (11), if necessary, to replace bearing from engine service deck by removing four screws and four washers

76.2.1.3 Cleaning – Droop Compensator

76.2.1.3.1 Clean external surfaces of parts by wiping with a cloth moistened with dry cleaning solvent (C-304). Do not permit solvent to enter bearings or actuator.

76.2.1.3.2 Dry governor actuator and droop compensator with dry, filtered compressed air.

76.2.1.4 Inspection – Droop Compensator Controls

76.2.1.4.1 Inspect linear actuator for evidence of damage or malfunction

• COPYRIGHT © 2007 BY DART AEROSPACE LTD. •
THIS DOCUMENT IS PRIVATE AND CONFIDENTIAL AND IS SUPPLIED ON THE EXPRESS CONDITION THAT IT IS NOT TO BE USED FOR ANY PURPOSE OR COPIED OR COMMUNICATED TO ANY OTHER PERSON WITHOUT WRITTEN PERMISSION FROM DART AEROSPACE LTD.

76.2.1.4.2 Inspect cambox for security of parts and smooth operation. Check that shims on each side of bellcrank bearing align the cam in center of slot and provides 0.001 to 0.003 inch (0.025 to 0.076 mm) clearance before bolt is tightened.

76.2.1.4.3 Check for broken shear pin by manually holding torque tube and applying slight force to bellcrank.

76.2.1.4.4 Inspect all other parts for freedom of operation, looseness and damage.

76.2.1.5 Repair/Replace – Droop Compensator Controls

76.2.1.5.1 Replace actuator if damage or malfunction occurs.

76.2.1.5.2 Replace cambox and bracket assembly if damaged or failing to operate smoothly.

76.2.1.5.3 Replace shear pin if sheared. Investigate cause of failure and correct any fouling of linkage or other faulty condition.

76.2.1.5.4 Replace other parts, where found unserviceable.

76.2.1.6 Installation – Droop Compensator Controls

76.2.1.6.1 Install bellcrank (6, Figure 76-1), torque tube (4), and associated parts as follows:

76.2.1.6.1.1 Position and secure support (11) to engine service deck, if previously removed, and secure with four screws and four washers.

76.2.1.6.1.2 Slide torque tube (4) through opening in firewall seal (10) then aft with pivot end in bearing of support (11).

76.2.1.6.1.3 Position bellcrank (6) on shaft of shear fitting (5), align shear pin holes and install shear pin (7).

76.2.1.6.1.4 Secure shear pin (7) with shim (8), washer (9), and plain washer on shaft of shear fitting (5).

76.2.1.6.1.5 Adjust shims (8) upon completion of installation to a 0.001 to 0.003 inch (0.025 to 0.076 mm) clearance between bellcrank (6) and shear fitting (5).

76.2.1.6.1.6 Insert assembled torque tube (4) with forward shaft in bearing of bracket assembly (3) on support (11) and secure with three bolts, six washers, and three nuts.

76.2.1.6.1.7 Install washer and nut on forward side of bracket assembly (3).

76.2.1.6.1.8 Adjust bracket assembly (3) and support (11) fore and aft for alignment and for freedom of operation of torque tube (4). Check and adjust shims for 0.001 to 0.003 inch (0.025 to 0.076 mm) clearance.

76.2.1.6.1.9 Install control tube (2), adjustable end up, to collective pitch bellcrank (1) and bellcrank (6). Secure each end with bolts, washers, nuts, and cotter pins.

76.2.1.6.2 Install control tube (12), adjustable end up, to bellcrank of cambox (14) and to aft end of fitting on torque tube (4). Secure with bolts, washers, and nuts. Install cotter pins after rigging has been completed.

76.2.1.6.3 Install control lever (16), if removed, on serrated shaft of overspeed governor. Adjust and secure control lever during rigging procedures.

76.2.1.6.4 Remove terminal cover with attaching screws from top of actuator and connect previously stowed wires to proper terminals, and reinstall cover with attaching screws.

• COPYRIGHT © 2007 BY DART AEROSPACE LTD. •
THIS DOCUMENT IS PRIVATE AND CONFIDENTIAL AND IS SUPPLIED ON THE EXPRESS CONDITION THAT IT IS NOT TO BE USED FOR ANY PURPOSE OR COPIED OR COMMUNICATED TO ANY OTHER PERSON WITHOUT WRITTEN PERMISSION FROM DART AEROSPACE LTD.

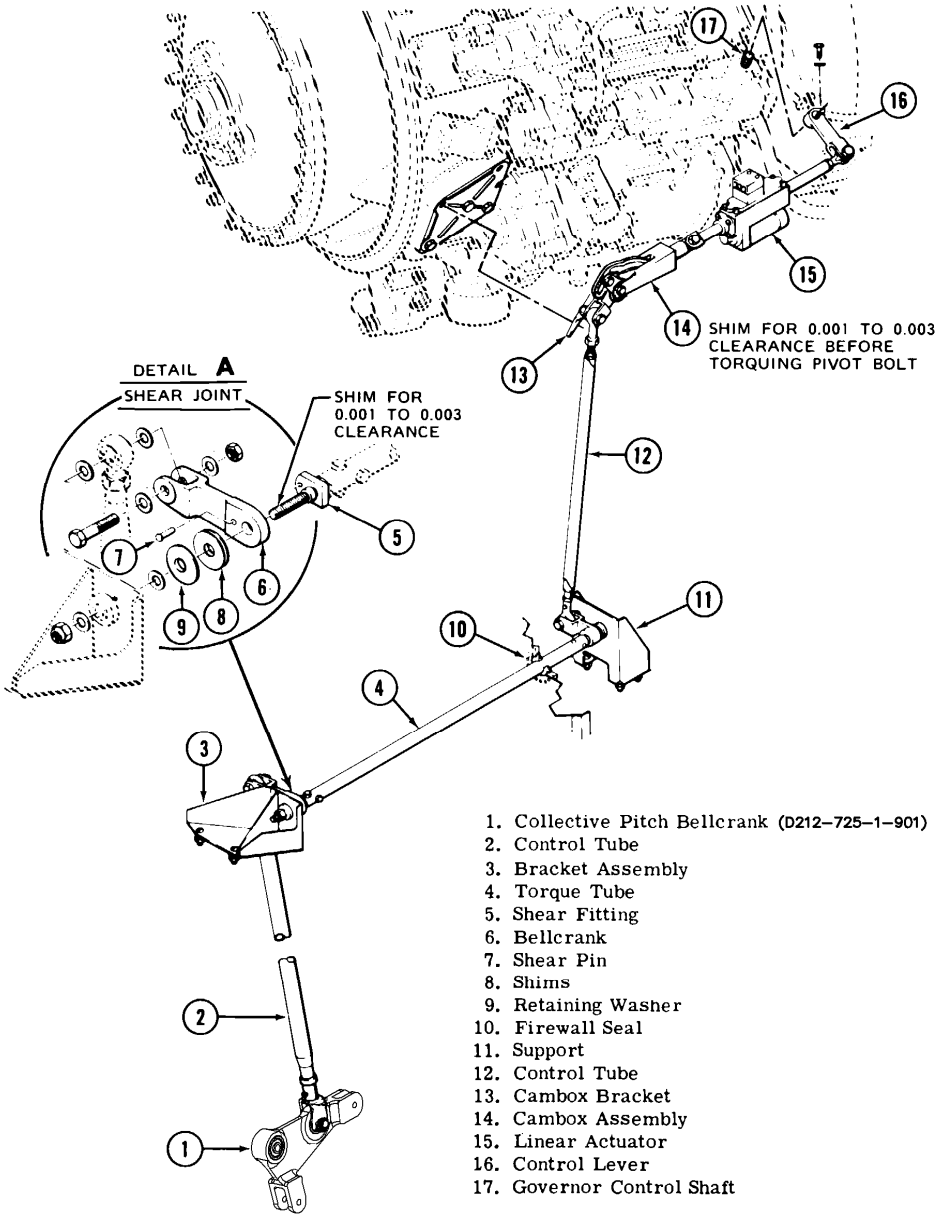

Figure 76-1. Droop Compensator Controls

• COPYRIGHT © 2007 BY DART AEROSPACE LTD. •
THIS DOCUMENT IS PRIVATE AND CONFIDENTIAL AND IS SUPPLIED ON THE EXPRESS CONDITION THAT IT IS NOT TO BE USED FOR ANY PURPOSE OR COPIED OR COMMUNICATED TO ANY OTHER PERSON WITHOUT WRITTEN PERMISSION FROM DART AEROSPACE LTD.

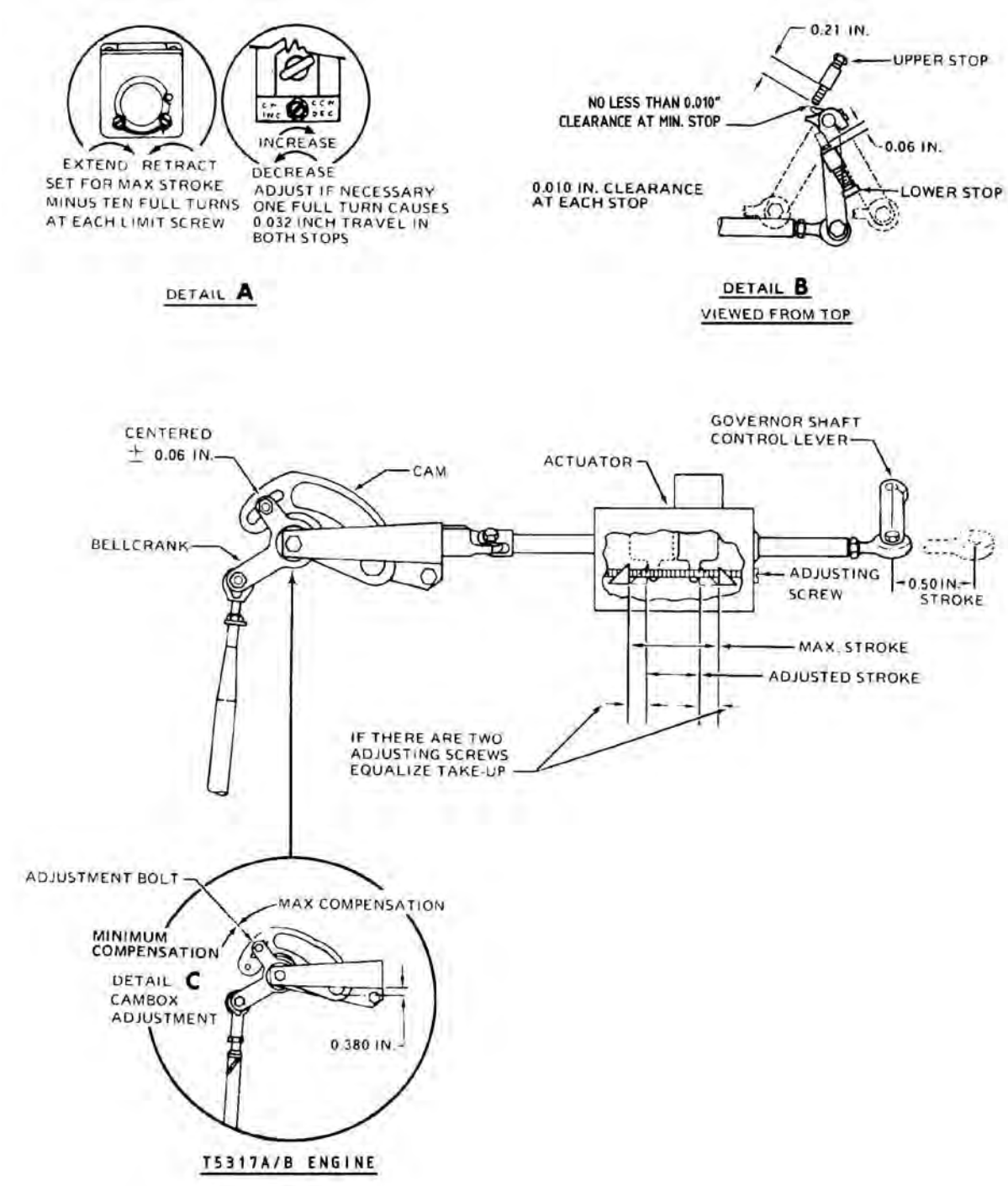

Figure 76-2. Rigging N2 Governor Actuator (Sheet 1 of 2)

• COPYRIGHT © 2007 BY DART AEROSPACE LTD. •
THIS DOCUMENT IS PRIVATE AND CONFIDENTIAL AND IS SUPPLIED ON THE EXPRESS CONDITION THAT IT IS NOT TO BE USED FOR ANY PURPOSE OR COPIED OR COMMUNICATED TO ANY OTHER PERSON WITHOUT WRITTEN PERMISSION FROM DART AEROSPACE LTD.

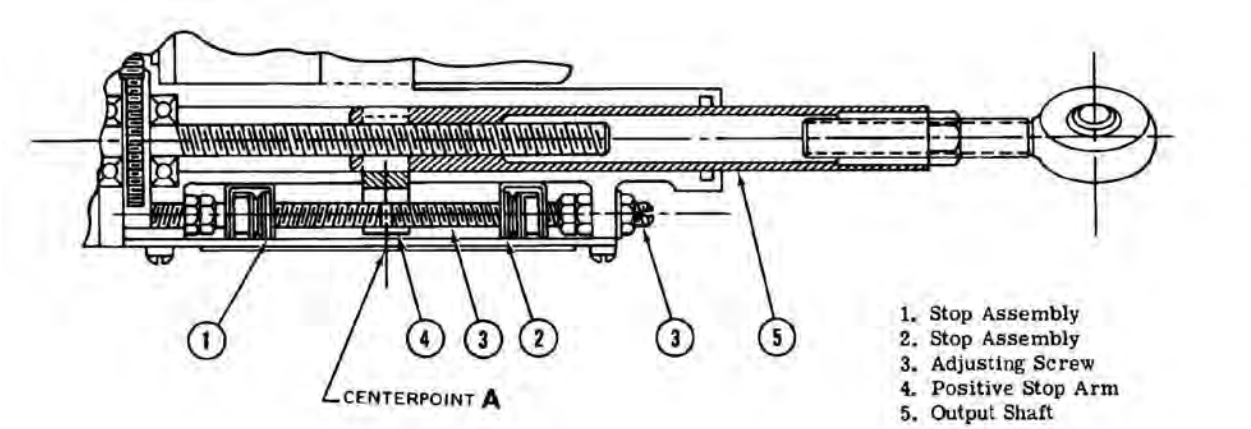

Figure 76-2. Rigging N2 Governor Actuator (Sheet 2 of 2)

76.2.2 Cambox and Linear Actuator

The electrically operated linear actuator (15, Figure 76-1) is controlled by the GOV RPM INCR/DECR switch on the pilots collective pitch control stick. The actuator moves a control lever (16) on the fuel control governor to change settings on the power turbine rpm. The droop compensator stabilizes rpm as powerplant load fluctuates with changes of main rotor pitch. This is provided by mounting the actuator to a cambox (14) which is mechanically linked to a bellcrank in the collective pitch control system.

76.2.2.1 Removal – Cambox and Linear Actuator

76.2.2.1.1 Remove terminal cover with attaching screws from top of linear actuator (15, Figure 76-1). Disconnect and stow electrical leads. Reinstall cover.

NOTE

Tag and identify electrical leads for proper installation on terminals upon reassembly.

76.2.2.1.2 Detach actuator jackshaft rod end from control lever (16) by removing cotter pin, nut, washer, and bolt.

CAUTION

HANDLE ACTUATOR WITH CARE, FOR IN NEXT STEP IT WILL BE COMPLETELY DETACHED.

76.2.2.1.3 Detach actuator clevis from cambox (14) by removing cotter pin, nut, washer, spring washer, and bolt.

NOTE

Use care to avoid losing spring washer, which is installed between actuator clevis and slider. Tag and identify for proper reinstallation on reassembly.

76.2.2.1.4 Remove nuts and washer from inboard end of two bolts that attach cambox (14) to cambox bracket (13).

76.2.2.1.5 Remove cambox (14) with bolts in place. Reinstall washers and nuts on bolts with care so that shims remain in place on bellcrank pivot bolt, between bearing and sides of housing.

• COPYRIGHT © 2007 BY DART AEROSPACE LTD. •
THIS DOCUMENT IS PRIVATE AND CONFIDENTIAL AND IS SUPPLIED ON THE EXPRESS CONDITION THAT IT IS NOT TO BE USED FOR ANY PURPOSE OR COPIED OR COMMUNICATED TO ANY OTHER PERSON WITHOUT WRITTEN PERMISSION FROM DART AEROSPACE LTD.

76.2.2.2 Installation – Cambox and Linear Actuator

76.2.2.2.1 Install cambox (14, Figure 76-1) as follows:

76.2.2.2.1.1 Remove nuts and washers temporarily installed on bolts.

76.2.2.2.1.2 Position cambox (14) on bracket (13) and secure with previously removed nuts and washers.

76.2.2.2.1.3 Check for 0.001 to 0.003 inch (0.025 to 0.076 mm) clearance between bellcrank and housing before torqueing pivot bolt and forward bolt.

76.2.2.2.2 Install actuator (15) as follows:

76.2.2.2.2.1 Position actuator clevis end to end of slider. Install bolt with bolt head up and with spring washer positioned between lower half of actuator clevis and slider. Install washer, nut, and cotter pin.

76.2.2.2.2.2 Temporarily secure actuator rod end to control lever (16) with bolt, washer, and nut. Check droop compensator control rigging. (Refer to paragraph 76.2.1.1.) Install cotter pin after rigging check.

• COPYRIGHT © 2007 BY DART AEROSPACE LTD. •
THIS DOCUMENT IS PRIVATE AND CONFIDENTIAL AND IS SUPPLIED ON THE EXPRESS CONDITION THAT IT IS NOT TO BE USED FOR ANY PURPOSE OR COPIED OR COMMUNICATED TO ANY OTHER PERSON WITHOUT WRITTEN PERMISSION FROM DART AEROSPACE LTD.

76.3 POWER LEVER CONTROLS

76.3.1 Power Lever Controls

The engine fuel and power control system permits the pilot to obtain maximum performance from the engine with a minimum of attention. Under normal flight conditions the N2 rotor speed is controlled by the power turbine speed governor. The N1 speed governor safeguards the engine against overloading, and on acceleration and deceleration. The control avoids engine damage or combustion blowout due to sudden changes in power.

76.3.1.1 Power Lever Control System

A mechanical linkage system, actuated by a twist grip on the collective pitch control lever, provides manual control of the power lever on the fuel control unit, modulating the engine from zero to full power by controlling the gas producer (N1) rpm. The linkage is a series of control rods, and bellcranks, with adjustable tubes at two locations in the series to the fuel control lever. One bellcrank (station 158.00) has an adjustment to provide correct travel of the engine airframe-mounted linkage. The power lever shaft is serrated to accept a control arm, and has a quadrant marked with power settings in the travel range between stops, pre-adjusted by the engine manufacturer or overhaul facility.

An adjustable flight idle stop and release, on the bellcrank (station 191.57) located below the engine service deck left side, contacts the plunger of a solenoid to arrest travel of the control linkage at flight idle position, when power is reduced from higher settings. Stop release is accomplished by use of the ENGINE IDLE STOP REL push button switch on the pilot's collective lever to retract the solenoid plunger.

A bleed air heater shut-off switch activated by a cam on the collective lever jackshaft is activated when high collective stick is required, which electrically closes the bleed air valve.

NOTE

The idle stop plunger will not retract if excessive pressure is applied by the twist grip toward the closed position.

76.3.1.2 Rigging – Power Lever Controls

NOTE

Rigging of power lever control system is normally accomplished in three operations: rigging-power lever controls, rigging-flight idle solenoid, and rigging-bleed air heater shut-off switch. (Refer to Chapter 67 for rigging bleed air heater shut-off switch.)

Refer to BHT-ALL-SPM for specifications and source.

MATERIALS REQUIRED

NUMBER	NOMENCLATURE
C-101	Corrosion Preventive Compound

NOTE

If dual controls kit P/N 212-706-005-003 or -007 is installed refer to BHT-212-SI-4 for installation and removal instructions.

76.3.1.2.1 Comply with the following general procedures when rigging power lever controls.

76.3.1.2.1.1 When a rigging procedure requires a specific position to accomplish steps, manually hold controls in position or secure controls in position with pilot friction adjustment.

76.3.1.2.1.2 Tolerance for rigging dimensions is ± 0.030 in. (0.76 mm) unless stated otherwise.

76.3.1.2.1.3 All adjustable control tubes shall have a maximum of 1.00 in. (25.4 mm) of exposed threads after adjustment. If control

• COPYRIGHT © 2007 BY DART AEROSPACE LTD. •
THIS DOCUMENT IS PRIVATE AND CONFIDENTIAL AND IS SUPPLIED ON THE EXPRESS CONDITION THAT IT IS NOT TO BE USED FOR ANY PURPOSE OR COPIED OR COMMUNICATED TO ANY OTHER PERSON WITHOUT WRITTEN PERMISSION FROM DART AEROSPACE LTD.

tubes have inspection holes, threads shall engage sufficiently to cover holes.

76.3.1.2.1.4 Apply corrosion preventive compound (C-101) to exposed threads of all adjustable rod bearings and devises after adjustment.

76.3.1.2.1.5 Torque control tube jamnuts 80 to 100 in-lbs (9.0 to 11.3 Nm) after adjustment unless otherwise specified.

76.3.1.2.1.6 Control tubes must be free to rotate several degrees about longitudinal axis. If necessary, loosen jamnuts, adjust end fitting and re-torque jamnuts.

76.3.1.2.2 If not previously accomplished, rig collective control system (Chapter 67).

76.3.1.2.3 Verify proper throttle flex shaft to gear sector engagement as follows:

76.3.1.2.3.1 Disconnect tube (14, Figure 76-3).

76.3.1.2.3.2 Disconnect control tube (9) from rod end bearing (7).

76.3.1.2.3.3 Inspect marked tooth (41) on pilot engine flex shaft (40) to ensure engagement of tenth tooth space on pilot engine gear sector.

76.3.1.2.3.4 Inspect gear sectors and flex shafts at base of copilot collective stick in same manner outlined in steps 76.3.1.2.3.3.

NOTE

If dual controls are installed accomplish step 76.3.1.2.3.5, do not accomplish step 76.3.1.2.3.6. If dual controls are not installed accomplish step 76.3.1.2.3.6, do not accomplish step 76.3.1.2.3.5.

76.3.1.2.3.5 If dual controls are installed, position pilot throttle (2) to full open position against stop. Position copilot throttle to full open. Hold twist grips in position against stops. Do not accomplish step 76.3.1.2.3.6. Proceed to step 76.3.1.2.3.7.

76.3.1.2.3.6 If dual controls are not installed, position pilot throttle (2) to full open position against stops. Hold twist grip in position against stop. Position copilot gear sector (44) as shown in View D. Hold gear sector in position while accomplishing steps 76.3.1.2.3.7.

NOTE

Controls must be positioned as described in step 76.3.1.2.3.5 or step 76.3.1.2.3.6 as applicable, prior to accomplishing steps 76.3.1.2.3.7.

76.3.1.2.3.7 Adjust control tube (9) to fit double rod end bearing (7). Torque jamnut on control tube (9) clevis. Install control tube (9) on double rod end bearing (7).

76.3.1.2.3.8 Move pilot throttle controls through the full range and verify for binding and/or obstruction of control movement.

76.3.1.2.3.9 Check pilot engine flex shaft (40) pinion and mating gear sector at base of pilot collective in same manner described in preceding step.

76.3.1.2.3.10 Check gear sectors (44) at the base of copilot collective in the same manner described in steps 76.3.1.2.3.8.

76.3.1.2.4 Ensure that flight idle stop solenoid (19, Figure 76-3) will not engage. (Loosen bolts and allow bracket (21) to be low enough not to engage cam.)

76.3.1.2.5 Ensure that adjustable rods (14 and 35) are to nominal dimensions.

76.3.1.2.6 Ensure that tube assembly (14) is positioned in center of slot of bellcrank (15).

76.3.1.2.7 Rotate twist grip (2) to full on and full off and cheek that overtravel of twist grip is equal.

• COPYRIGHT © 2007 BY DART AEROSPACE LTD. •
THIS DOCUMENT IS PRIVATE AND CONFIDENTIAL AND IS SUPPLIED ON THE EXPRESS CONDITION THAT IT IS NOT TO BE USED FOR ANY PURPOSE OR COPIED OR COMMUNICATED TO ANY OTHER PERSON WITHOUT WRITTEN PERMISSION FROM DART AEROSPACE LTD.

NOTE

If twist grip overtravel is not equal, an increase or decrease in the length of either of the adjustable rods (14 and 35) will have to be accomplished. If overtravel of five degrees is not available at each end of travel, then tube assembly (14) will have to be repositioned in bellcrank (15).

76.3.1.2.8 Adjust tube assembly (14), at serrated attachment on bellcrank (15), so that the power shaft stop arm (39) will bottom out on stops (38) and twist grip will have five degrees more travel before it bottoms. (The collective lever incorporates internal stops for the twist grips.)

76.3.1.2.9 Recheck system for freedom of operation and security, and that cotter pins and lockwiring is complete.

76.3.1.2.10 Check flight idle solenoid rigging. (Refer to paragraph 76.3.23.)

76.3.1.3 Removal – Power Lever Controls

76.3.1.3.1 Open engine cowling left side.

76.3.1.3.2 Remove access doors from Aft bottom of fuselage, below pilot's and copilot's seats and deck center access doors.

NOTE

Tag and identify shims, bolts and washers removed for reinstallation in their respective locations.

76.3.1.3.3 Remove control rods (7 & 8, Figure 76-3) from sector gears on pilot and copilot collectives and from bellcrank (8) at center by removing cotter pins, nuts, washers and screws and bolt.

76.3.1.3.4 Remove tube assembly (10) from bellcrank (8) and bellcrank (11) by removing cotter pins, nuts, washers and screws and bolt.

76.3.1.3.5 Remove tube assembly (12) from bellcrank (11) and bellcrank (13) by removing cotter pins, nuts, washers and screws and bolt.

76.3.1.3.6 Remove tube assembly (14) from bellcrank (13) and bellcrank (15) by removing cotter pins, nuts, washers and screws and bolt.

NOTE

Retain serrated washer for reinstallation in its respective location.

76.3.1.3.7 Remove tube assembly (18) from bellcrank (17) and bellcrank (23) by removing cotter pins, nuts, washers and screws and bolt.

76.3.1.3.8 Remove bellcranks (11, 13, 15, 17, and 23) from their respective mounts by removing cotter pins, nuts, washers.

76.3.1.3.9 Remove bellcrank (23) with cam (24) by removing cotter pins, nuts, washers.

76.3.1.3.10 Disassemble cam (24) from bellcrank (23) by removing two bolts and two serrated washers.

76.3.1.3.11 Remove tube assembly (32) and protective housing as follows:

76.3.1.3.11.1 Remove cotter pin, nut, washers, and bolt securing tube assembly (32) to bellcrank (34).

76.3.1.3.11.2 Loosen clamp (28) securing retainer (30) to boot assembly (27) and lift tube assembly (32) clear of structure.

76.3.1.3.11.3 Remove retainer ring (29) from split bushing (31) and separate retainer (30) from tube assembly (32)

76.3.1.3.11.4 Loosen clamp (26) and separate boot assembly (27) from housing (25).

• COPYRIGHT © 2007 BY DART AEROSPACE LTD. •
THIS DOCUMENT IS PRIVATE AND CONFIDENTIAL AND IS SUPPLIED ON THE EXPRESS CONDITION THAT IT IS NOT TO BE USED FOR ANY PURPOSE OR COPIED OR COMMUNICATED TO ANY OTHER PERSON WITHOUT WRITTEN PERMISSION FROM DART AEROSPACE LTD.

76.3.1.3.11.5 Remove housing (25) from engine service deck by removing five bolts and five washers.

76.3.1.3.12 Remove adjustable rod (35) from bellcrank (34) and fuel control lever (37) by removing cotter pins, nuts, washers, and bolts.

76.3.1.3.13 Remove bellcrank (34) from engine support (33) by removing cotter pin, nut, washer, spacer, and bolt.

76.3.1.3.14 Remove lockwire and loosen retaining screw (36) and lift fuel control lever (37) from serrated power lever shaft.

76.3.1.4 Cleaning – Power Lever Controls

76.3.1.4.1 Clean external surfaces of parts by wiping with a cloth moistened with solvent (C-304). Do not permit solvent to enter bearing or solenoid.

76.3.1.4.2 Dry power lever control with filtered, dry compressed air.

76.3.1.5 Inspect – Power Lever Controls

76.3.1.5.1 Inspect control rods and tube assemblies for cracks, general condition, end fittings for security, and bearings for binding or rough operation.

76.3.1.5.2 Inspect bellcranks, torque tube and levers for security, cracks, damage, and binding or rough bearings.

76.3.1.5.3 Inspect solenoid for security and proper operation.

76.3.1.6 Repair/Replace – Power Lever Controls

76.3.1.6.1 Replace control rods or tube assemblies if cracked, distorted, or loose rod ends or bearings.

76.3.1.6.2 Replace bellcranks, torque tube, and levers if damaged.

76.3.1.6.3 Replace bearings if damaged, rough operation, or binding.

76.3.1.6.4 Replace solenoid if malfunctioning, and recheck rigging of solenoid if replaced.

76.3.1.7 Installation – Power Lever Controls

76.3.1.7.1 Position fuel control lever (37, Figure 76-3) on the power lever shaft so that the lever is a nearly parallel to the power lever shaft stop arm (39) as serration alignment will permit. (Make a final adjustment of fuel control lever during rigging). Tighten retaining screw (36) and lockwire.

76.3.1.7.2 Position bellcrank (34) on engine support (33) with **longer leg up** and shorter leg forward and secure bolt, spacer, washer, nut, and cotter pin.

76.3.1.7.3 Check adjustable rod (35) for 11.17 inches (283.72 mm) between centers of rod end bearings.

76.3.1.7.4 Position adjustable rod end (35) in place and secure with bolts, washers, nuts, and cotter pins.

76.3.1.7.5 Install tube assembly (32) and protective housing as follows:

76.3.1.7.5.1 Position housing (25) on engine service deck and secure with five bolts and five washers.

76.3.1.7.5.2 Position boot assembly (27) around housing (25) and secure with clamp (26).

76.3.1.7.5.3 Position retainer ring (29) on tube assembly (32), install split bushing (31)

• COPYRIGHT © 2007 BY DART AEROSPACE LTD. •
THIS DOCUMENT IS PRIVATE AND CONFIDENTIAL AND IS SUPPLIED ON THE EXPRESS CONDITION THAT IT IS NOT TO BE USED FOR ANY PURPOSE OR COPIED OR COMMUNICATED TO ANY OTHER PERSON WITHOUT WRITTEN PERMISSION FROM DART AEROSPACE LTD.

around tube assembly (32) and in opening of retainer (30) and secure with retainer ring (29).

76.3.1.7.5.4 Place loosened clamp (28) on boot assembly (27) and install tube assembly (32) down into boot assembly (27)

76.3.1.7.5.5 Position boot assembly (27) approximately 0.20 inches (5.08 mm) above clamp. Adjust boot assembly so that there will be no blinding during tube extension or retractions. Install retainer (29) and secure with clamp (28)

76.3.1.7.5.6 Position tube assembly (32) to mate with bellcrank (34) and secure with bolt, washers, nut, and cotter pin.

76.3.1.7.6 Position bellcrank (23) on mounting and secure with washers, nut and cotter pin.

76.3.1.7.7 Connect previously installed tube assembly (32) to bellcrank (23) using bolt, washers, nut, and cotter pin.

76.3.1.7.8 Install bellcranks (11, 13, and 15) respective mounts and secure with washers, nuts, and cotter pins.

76.3.1.7.9. Install tube assemblies (10, 12, 14, 16, and 18) to their respective bellcranks and secure with bolts, washers, nuts, and cotter pins.

NOTE

Check adjustable tube assembly (14) for 31.19 inches between centers of rod end bearings.

76.3.1.7.10 Install control rods (7 and 8, Figure 76-3) on sector gears on pilot and copilot collectives and bellcrank (8) at center and secure with screws and blot, washers, nuts, and cotter pins.

76.3.1.7.11 Final adjustment of adjustable tube assemblies will be accomplished during rigging.

• COPYRIGHT © 2007 BY DART AEROSPACE LTD. •
THIS DOCUMENT IS PRIVATE AND CONFIDENTIAL AND IS SUPPLIED ON THE EXPRESS CONDITION THAT IT IS NOT TO BE USED FOR ANY PURPOSE OR COPIED OR COMMUNICATED TO ANY OTHER PERSON WITHOUT WRITTEN PERMISSION FROM DART AEROSPACE LTD.

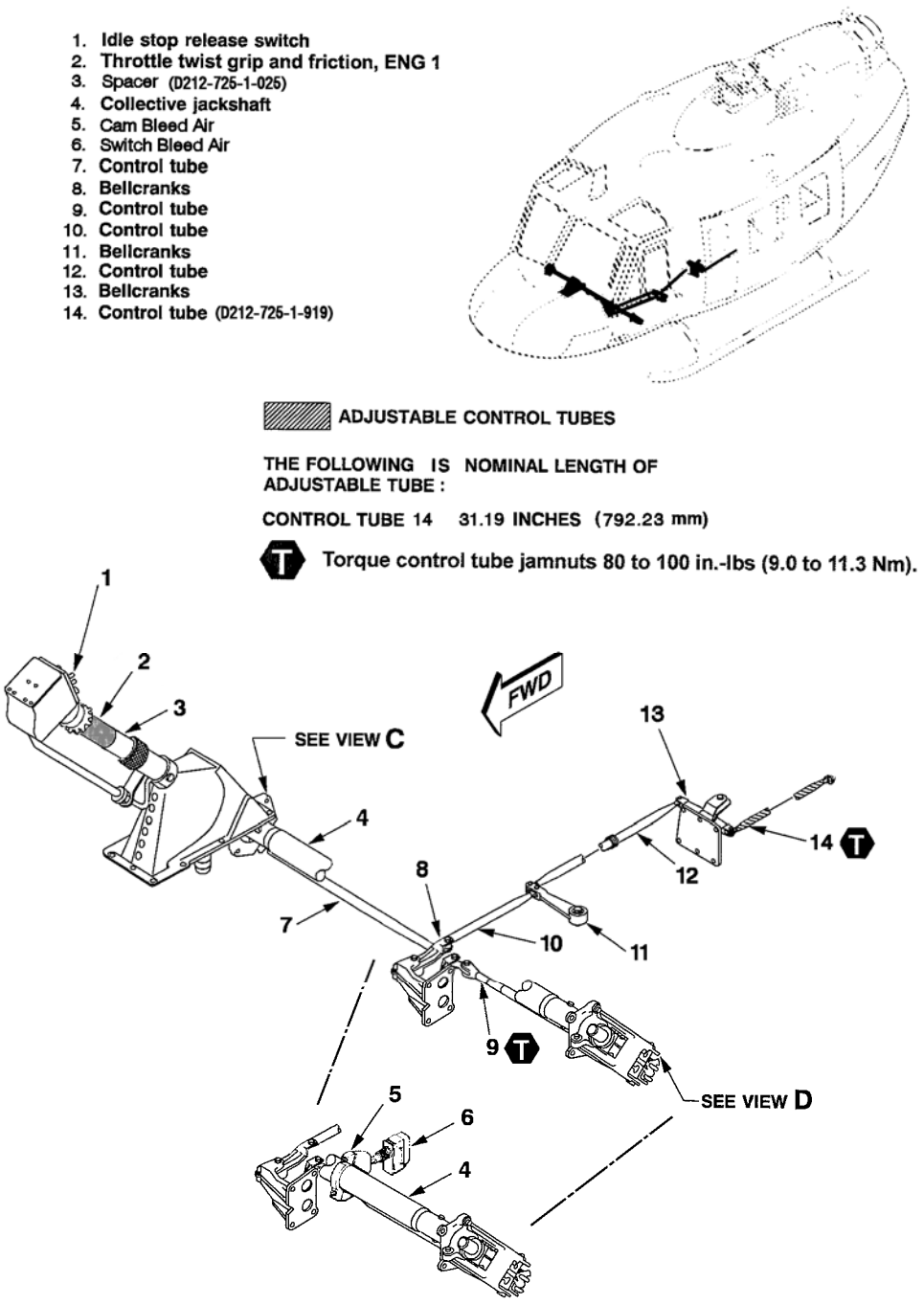

Figure 76-3. Power Lever (N1) Controls Rigging (Sheet 1 of 3)

• COPYRIGHT © 2007 BY DART AEROSPACE LTD. •
THIS DOCUMENT IS PRIVATE AND CONFIDENTIAL AND IS SUPPLIED ON THE EXPRESS CONDITION THAT IT IS NOT TO BE USED FOR ANY PURPOSE OR COPIED OR COMMUNICATED TO ANY OTHER PERSON WITHOUT WRITTEN PERMISSION FROM DART AEROSPACE LTD.

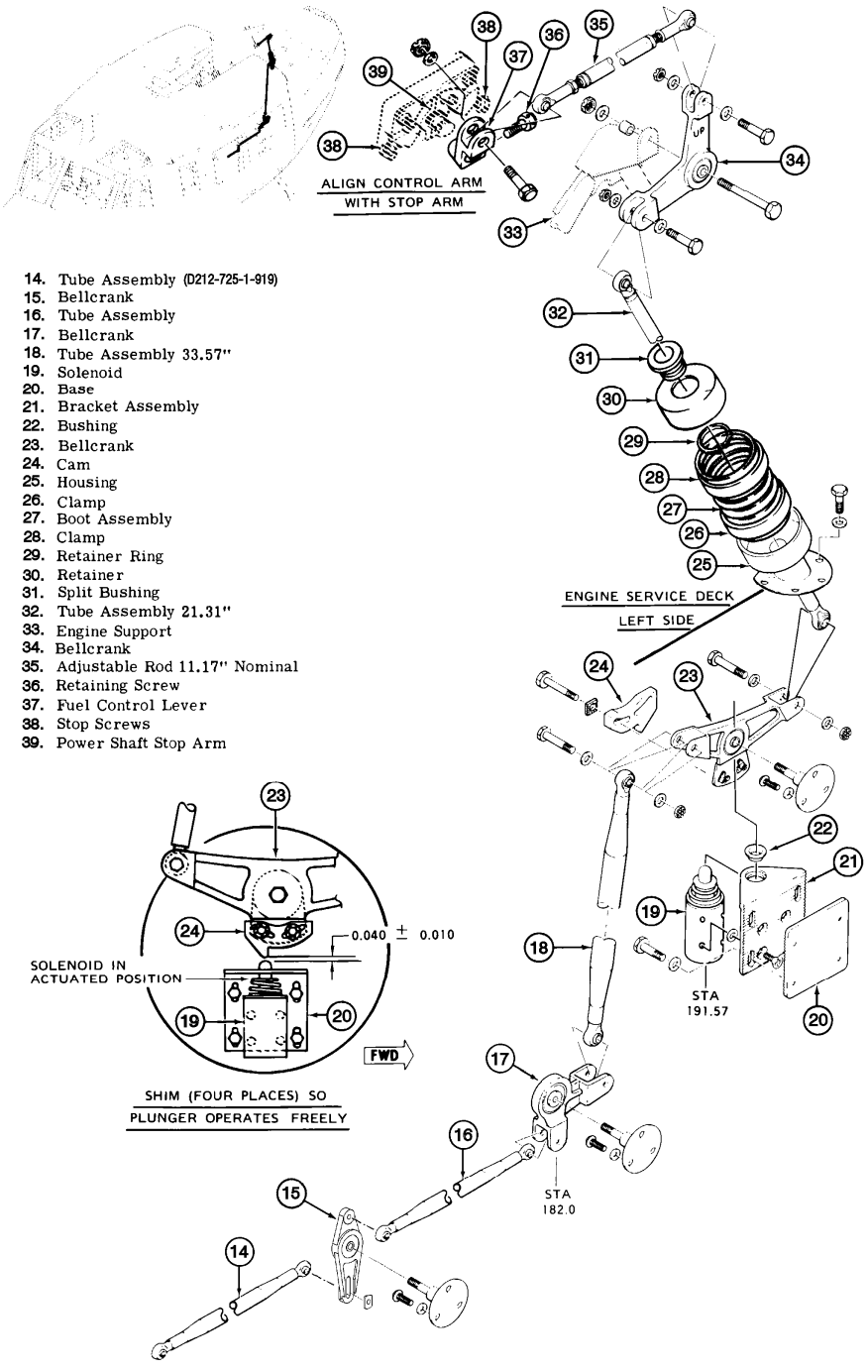

Figure 76-3. Power Lever Control System (Sheet 2 of 3)

• COPYRIGHT © 2007 BY DART AEROSPACE LTD. •
THIS DOCUMENT IS PRIVATE AND CONFIDENTIAL AND IS SUPPLIED ON THE EXPRESS CONDITION THAT IT IS NOT TO BE USED FOR ANY PURPOSE OR COPIED OR COMMUNICATED TO ANY OTHER PERSON WITHOUT WRITTEN PERMISSION FROM DART AEROSPACE LTD.

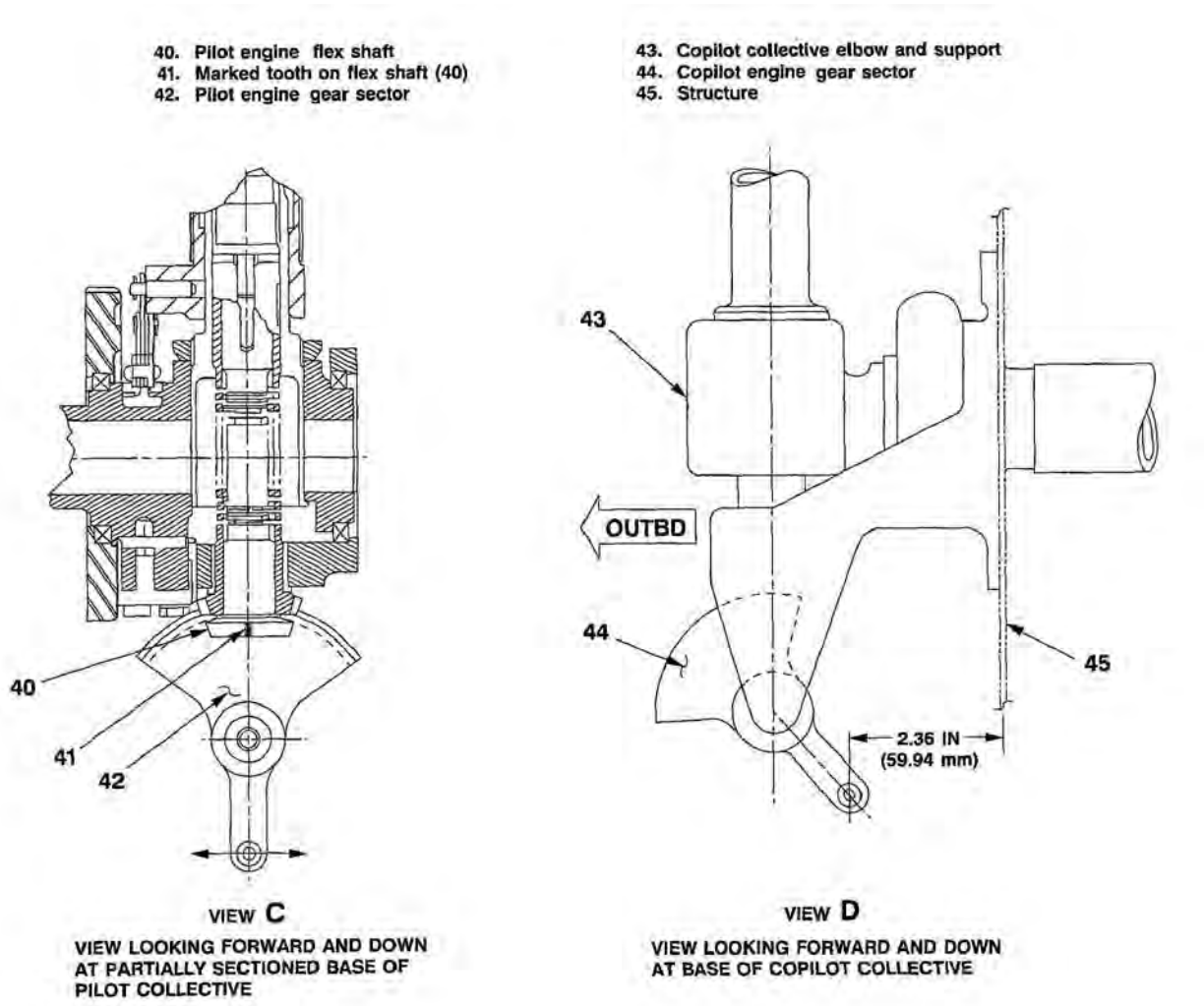

Figure 76-3. Power Lever (N1) Control Rigging (Sheet 3 of 3)

76.3.2 Flight Idle Solenoid

A spring loaded, electrically actuated flight idle solenoid is installed in the power lever control system. The plunger of the solenoid is contacted by a stop assembly to arrest movement of the control linkage at the proper start or flight idle speed.

76.3.2.1 Removal – Flight Idle Solenoid

76.3.2.1.1 Disconnect terminals of wires from solenoid (19, Figure 76-3) and stow cable assembly.

NOTE
Tag and identify terminals and shims for proper installation upon reassembly.

76.3.2.1.2 Remove four bolts and four washers securing bracket (21) to base (20) and structures.

• COPYRIGHT © 2007 BY DART AEROSPACE LTD. •
THIS DOCUMENT IS PRIVATE AND CONFIDENTIAL AND IS SUPPLIED ON THE EXPRESS CONDITION THAT IT IS NOT TO BE USED FOR ANY PURPOSE OR COPIED OR COMMUNICATED TO ANY OTHER PERSON WITHOUT WRITTEN PERMISSION FROM DART AEROSPACE LTD.

76.3.2.1.3 Remove four screws with four shims securing solenoid (19) to bracket assembly (21).

76.3.2.2 Installation – Flight Idle Solenoid

76.3.2.2.1 Position solenoid (19, Figure 76-3) on bracket assembly (21) and, using previously removed shims, secure with four screws.

76.3.2.2.2 Check that plunger of solenoid is centered through bushing (22). If necessary, adjust thickness of shims to align plunger through bushing.

76.3.2.2.3 Position solenoid with base (20) on fuselage structure and secure in place with four bolts and four washers. Position solenoid to its lowest position so that cam will not contact solenoid at any position. (Final adjustment will be accomplished during rigging.)

76.3.2.2.4 Connect cable assembly terminals to terminals of solenoid.

76.3.2.2.5 Position cam (24) on bellcrank (23) and secure with two bolts and two serrated washers. Make final adjustment of cam during rigging (Refer to paragraph 76.3.2.3.)

76.3.2.3 Rigging – Flight Idle Solenoid

76.3.2.3.1 Rotate twist grip control on collective lever until the power shaft stop arm (39, Figure 76-3) is aligned with the 38 degree mark on the engine fuel control.

76.3.2.3.2 Check that plunger of solenoid (19 operates freely through bracket bushing (22). If necessary, adjust shims between solenoid and bracket to obtain plunger alignment.

76.3.2.3.3 Position solenoid (19) with bracket (21) on serrated base (20) to obtain a 0.040 (1.016 mm) ± 0.010 inch (0.254 mm) clearance between tip of plunger and projected surface of cam (24). Secure in place with four bolts and four washers.

76.3.2.3.4 Projected surface of arm should be just aft of center line of the solenoid plunger. Adjust cam (21) on bellcrank (23) if necessary, but clearance must still be maintained.

76.3.2.3.5 Check operation of flight idle stop in ground run. If necessary, readjust to obtain 71% ± 1% RPM, indicated on GAS PRODUCER TACHOMETER (N1). Check release by actuating solenoid using push button switch pilot's collective stick.

76.3.3 UpTrim for the T5317 Engine

76.3.3.1 Accomplish a maximum power (torquemeter pressure) check. (Refer to FMS-D212-725-1).

76.3.3.2 If the check is satisfactory, uptrim is not required. If the installed engine does not satisfactorily meet the maximum power check, insure that the engine compressor is clean and perform adjustment/test checks of the variable inlet guide vane and bleed band systems per Honeywell Maintenance Manual T5313B and T5317 series. If these checks are satisfactory, limited uptrim of the checks engine is now allowed using the following procedure.

NOTE

Large changes in available torque may signal more severe engine, airframe, or instrument problems which should not be treated as normal deterioration requiring uptrim.

76.3.3.2.1 Fuel Control Adjustment.

WARNING

ADJUSTMENTS TO THE FUEL CONTROL MAY AFFECT SAFETY OF FLIGHT. ONLY DESIGNATED AND QUALIFIED

• COPYRIGHT © 2007 BY DART AEROSPACE LTD. •
THIS DOCUMENT IS PRIVATE AND CONFIDENTIAL AND IS SUPPLIED ON THE EXPRESS CONDITION THAT IT IS NOT TO BE USED FOR ANY PURPOSE OR COPIED OR COMMUNICATED TO ANY OTHER PERSON WITHOUT WRITTEN PERMISSION FROM DART AEROSPACE LTD.

CHAPTER 76 – ENGINE CONTROLS (76-00-00)

PERSONNEL SHALL BE PERMITTED TO PERFORM THE ADJUSTMENTS. RECORD ORIGINAL FUEL CONTROL ASSEMBLY SETTINGS BEFORE MAKING ANY ADJUSTMENTS.

CAUTION

AFTER THE FUEL CONTROL TRIM ADJUSTMENT HAS BEEN CHANGED, THE MAXIMUM N1 SPEED FROM THE ENGINE HISTORICAL RECORDS (AS RECORDED ON THE ENGINE DATA PLATE) IS NO LONGER ACCURATE AND THE GAS PRODUCER SPEED THERMODYNAMIC LIMIT GAGE MARKING AND SPEED LIMIT PLACARD MUST BE CHANGED ACCORDINGLY.

NOTE

The gas producer speed check chart in FMS-D212-725-1 (extended to 105%) is still valid if the new adjusted gas producer speed is used to adjust the chart reading rather than using engine nameplate gas producer speed. The exhaust gas temperature check is still valid.

Each time the engine fuel control is trimmed in this manner, the new baseline N1 speed as determined in Step (76.3.3.2.1.5) shall be recorded by replacing the gas producer speed limit placard and changing the engine historical records.

76.3.3.2.1.1 Remove lockwire and loosen the trimmer lock bolt (1, Figure 76-4)

CAUTION

IF TOO MUCH ADJUSTMENT HAS BEEN MADE, IT IS POSSIBLE TO EXCEEDED THE N1 STRUCTURAL LIMIT (105%) DURING THIS CHECK N1 SPEED SHOULD BE CAREFULLY MONITORED (AND IF NECESSARY, LIMITED BY THE PILOT) DURING THE MAXIMUM POWER CHECK.

NOTE

One-eighth turn of takeoff trim screw (3) equals approximately 2 psi (0.23 N-m) torque which is approximately equal to 1% N1.

76.3.3.2.1.2 Increase torque pressure (and N1 speed) to meet the maximum power check by turning the takeoff trim screw (3) counterclockwise. Decrease by turning the takeoff trim screw clockwise. Do not decrease below data plate N1 speed.

76.3.3.2.1.3 After adjustment is completed, torque trimmer lock bolt (1) and secure with lockwire (C-405) to trimmer screws (2) and (3).

76.3.3.2.1.4 Repeat the maximum power deck.

76.3.3.2.1.5 Insure that N1 speed does not exceed 105% and verify that the new torque pressure is not less than the Maximum Power check chart torquemeter pressure. The takeoff power N1 speed recorded during the maximum power check at N1 topping shall be used as a basis for selecting a new gas producer speed limit placard for the cockpit, and shall be selected to the nearest 0.1%. Enter this speed in the engine historical records.

• COPYRIGHT © 2007 BY DART AEROSPACE LTD. •
THIS DOCUMENT IS PRIVATE AND CONFIDENTIAL AND IS SUPPLIED ON THE EXPRESS CONDITION THAT IT IS NOT TO BE USED FOR ANY PURPOSE OR COPIED OR COMMUNICATED TO ANY OTHER PERSON WITHOUT WRITTEN PERMISSION FROM DART AEROSPACE LTD.

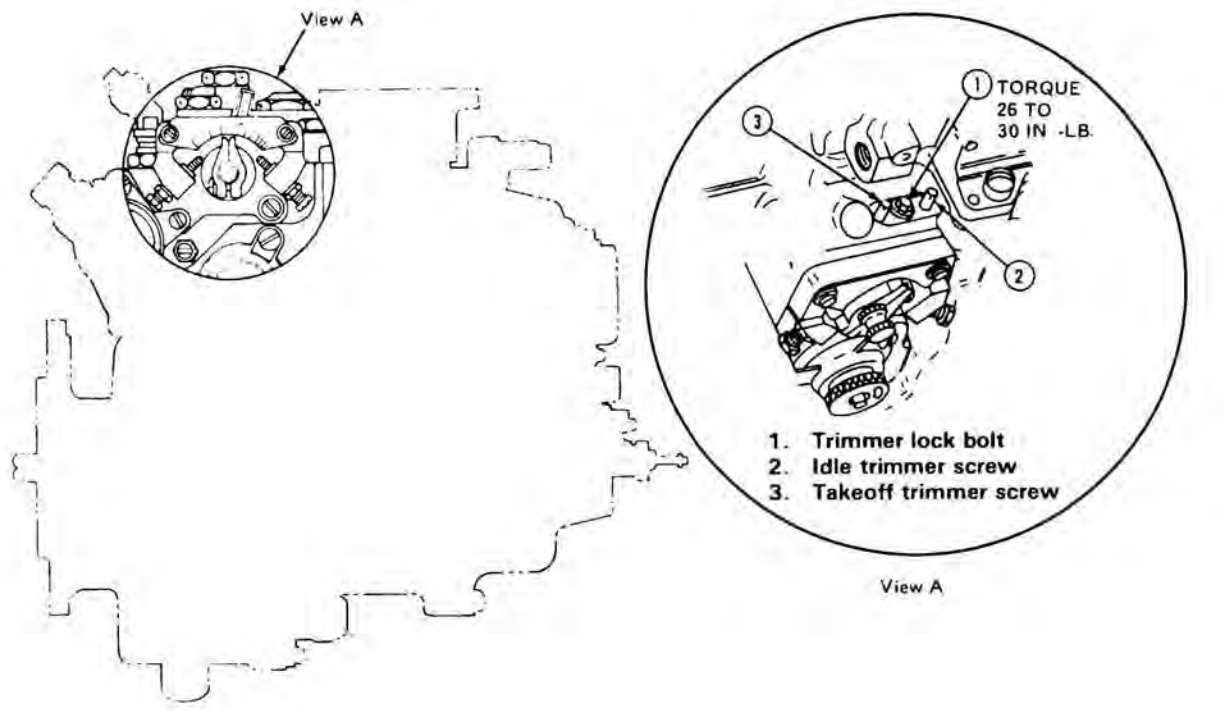

Figure 76-4. Fuel Control Adjustments

• COPYRIGHT © 2007 BY DART AEROSPACE LTD. •
THIS DOCUMENT IS PRIVATE AND CONFIDENTIAL AND IS SUPPLIED ON THE EXPRESS CONDITION THAT IT IS NOT TO BE USED FOR ANY PURPOSE OR COPIED OR COMMUNICATED TO ANY OTHER PERSON WITHOUT WRITTEN PERMISSION FROM DART AEROSPACE LTD.

CHAPTER 79
ENGINE OIL SYSTEM
(79-00-00)

• COPYRIGHT © 2007 BY DART AEROSPACE LTD. •
THIS DOCUMENT IS PRIVATE AND CONFIDENTIAL AND IS SUPPLIED ON THE EXPRESS CONDITION THAT IT IS NOT TO BE USED FOR ANY PURPOSE OR COPIED OR COMMUNICATED TO ANY OTHER PERSON WITHOUT WRITTEN PERMISSION FROM DART AEROSPACE LTD.

CHAPTER 79 – ENGINE OIL SYSTEM (79-00-00)

TABLE OF CONTENTS

List of Figures 2
79.1 Engine Oil System – General 3
79.2 Engine Oil Cooler 3
79.3 Engine Oil Tank 8
79.4 Engine External Oil Filter 9
79.5 Turbo Blower 10

LIST OF FIGURES

Figure 79-1. Engine oil components 4
Figure 79-2. Engine oil system 7

• COPYRIGHT © 2007 BY DART AEROSPACE LTD. •
THIS DOCUMENT IS PRIVATE AND CONFIDENTIAL AND IS SUPPLIED ON THE EXPRESS CONDITION THAT IT IS NOT TO BE USED FOR ANY PURPOSE OR COPIED OR COMMUNICATED TO ANY OTHER PERSON WITHOUT WRITTEN PERMISSION FROM DART AEROSPACE LTD.

CHAPTER 79 – ENGINE OIL SYSTEM (79-00-00)

79.1 Engine Oil System – General

Engine lubricating oil is supplied from a tank mounted on the forward firewall at right side of engine compartment. The oil flows to inlet port of an engine-driven, dual-element pump on front of the engine accessory gearbox. Oil is delivered under a relatively constant volume and variable pressure, maintained by a pressure relief valve on the pump, to a filter on the left side of accessory gearbox. Through a system of external transfer tubes and internal passages, the engine receives adequate gear and bearing lubrication. A scavenge section of engine oil pump directs oil through external lines to an oil filter, then to the oil cooler. Depending upon temperature of the scavenged oil, it is either circulated through cooler or routed directly back to oil supply tank through a bypass valve. (Refer to Figure 79-1 for engine oil system components.)

79.2 Engine Oil Cooler

A cooler for engine oil is mounted in the bottom of the fuselage behind the engine, and is connected into the oil return line through a thermal bypass valve. Cooling air flow is provided by a bleed air driven turbo blower.

79.2.1 Removal – Engine Oil Cooler

79.2.1.1 Drain oil cooler by opening valve below cooler outlet. (Refer to Figure 79-1.)

79.2.1.2 Disconnect inlet, outlet, and drain tubes ‘from cooler fittings and valve.

79.2.1.3 Remove four bolts and washers at lower side flange to detach engine cooler from support. Remove oil cooler.

• COPYRIGHT © 2007 BY DART AEROSPACE LTD. •
THIS DOCUMENT IS PRIVATE AND CONFIDENTIAL AND IS SUPPLIED ON THE EXPRESS CONDITION THAT IT IS NOT TO BE USED FOR ANY PURPOSE OR COPIED OR COMMUNICATED TO ANY OTHER PERSON WITHOUT WRITTEN PERMISSION FROM DART AEROSPACE LTD.

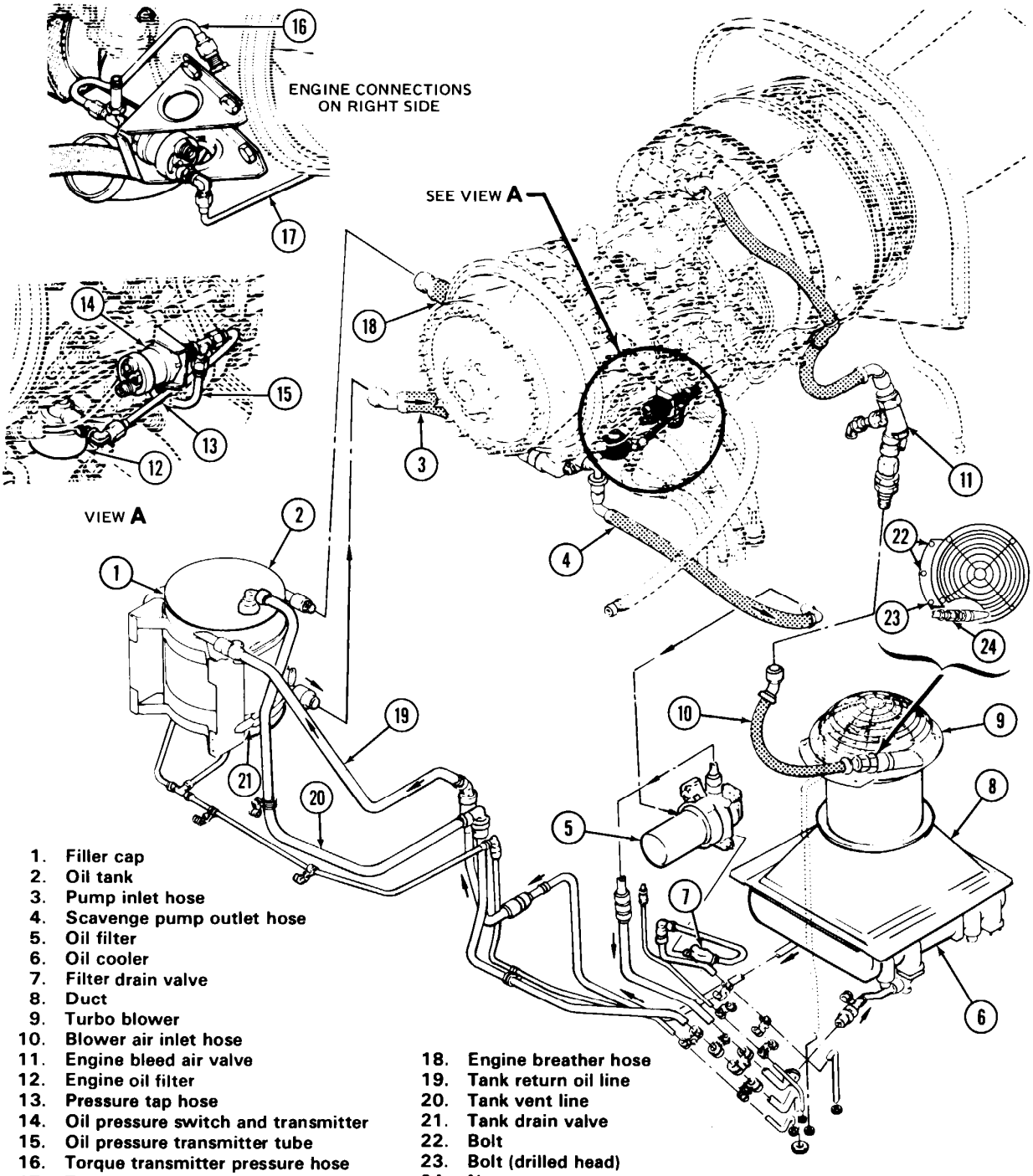

Figure 79-1. Engine oil components

• COPYRIGHT © 2007 BY DART AEROSPACE LTD. •
THIS DOCUMENT IS PRIVATE AND CONFIDENTIAL AND IS SUPPLIED ON THE EXPRESS CONDITION THAT IT IS NOT TO BE USED FOR ANY PURPOSE OR COPIED OR COMMUNICATED TO ANY OTHER PERSON WITHOUT WRITTEN PERMISSION FROM DART AEROSPACE LTD.

79.2.2 Cleaning – Oil Cooler

When the oil cooler is removed from the helicopter after a prolonged period of service, it shall be cleaned both internally and externally as follows:

79.2.2.1 Clean exterior of oil cooler with steam or similar vapor-pressure agent. Remove any obstructions from air fins with compressed air.

79.2.2.2 Clean cooler internally by pressure flushing with suitable equipment, which should include a centrifugal pump capable of a flow rate of 10 gpm at 30 psi pressure, suitable tanks and hoses, and two 100-mesh screens, installed at inlet and outlet ports.

79.2.2.3 Ensure that drain valve is in closed position, then connect cleaning equipment to inlet and outlet port.

79.2.2.4 Clean cooler interior to remove oil and sludge by circulating solvent (C-304) through the cooler. Circulate fluid in opposite normal flow direction for 30 minutes, or until fluid appears clean after passing though cooler. Drain cooler.

79.2.2.5 Remove carbon deposits, engine oil, gums, lead deposits, and other contaminants from cooler interior with solvent (C-304). Flush opposite normal flow direction for 30 minutes; reverse lines and flush for another 30 minutes.

79.2.2.6 Rinse cooler for 10 minutes with solvent (C-304). Blow cooler dry with compressed air.

79.2.3 Inspection – Engine Oil Cooler

79.2.3.1 Inspect the oil cooler for distortion in air fins, damaged passages, bulged plates, cracked castings, broken welds, and stripped threads.

79.2.3.2 Inspect core assembly for foreign matter, leakage, and scoring.

79.2.4 Repair/Replacement – Engine Oil Cooler

79.2.4.1 Limit repairs of oil cooler to the straightening of air fins.

79.2.4.2 Replace the oil cooler if any of the following exists:

79.2.4.2.1 Blown or bulged tubes.

79.2.4.2.2 Cracked or broken flanges, shrouds, ducts or castings.

79.2.4.2.3 Major dents and similar damage in tube edges or in tanks which do not leak, but could impair oil cooler performance.

79.2.4.2.4 Damaged air fins which cannot be straightened.

79.2.4.2.5 Damaged threads in drain port or on inlet and outlet pad studs.

79.2.5 Installation – Engine Oil Cooler

79.2.5.1 Assemble gasket and fitting on cooler inlet, securing with nuts and washers on four studs. Assemble fitting on cooler outlet in same manner. Install drain valve, with packing and nut, in port below cooler outlet.

79.2.5.2 Position cooler assembly, with inlet and outlet ports forward. Install bolts, with thin aluminum alloy washers under heads, through slotted holes in lower side flanges of cooler into plate nuts of support.

79.2.5.3 Install bolts through mating flanges of engine and transmission oil coolers.

79.2.5.4 Connect oil tubes to cooler inlet and outlet fittings, and connect drain tube to valve.

• COPYRIGHT © 2007 BY DART AEROSPACE LTD. •
THIS DOCUMENT IS PRIVATE AND CONFIDENTIAL AND IS SUPPLIED ON THE EXPRESS CONDITION THAT IT IS NOT TO BE USED FOR ANY PURPOSE OR COPIED OR COMMUNICATED TO ANY OTHER PERSON WITHOUT WRITTEN PERMISSION FROM DART AEROSPACE LTD.

79.2.5.5 Position duct between upper flanges of cooler and mount. Install eight bolts, with thin aluminum alloy washers under heads, through mounting flanges into plate nuts of duct.

79.2.6 Testing – Engine Oil Cooler

79.2.6.1 Plug either inlet or outlet port, and connect air line to the open port. Submerge cooler in water at ambient room temperature and apply 10 psig air pressure. Heat water to 120° to 130°F (49° to 54°C) and gradually increase air pressure to 100 psig. Check for air bubbles in water, indicating leaks in cooler. Remove cooler from water, release air from system, and blow cooler dry with compressed air. If leakage is indicated, replace cooler.

79.2.6.2 Plug either inlet or outlet port, and apply water at 75°F (24°C) at 400 psig to other port. Lock fluid in cooler for 10 minutes and examine cooler for leaks. Release water pressure, drain cooler, and dry with compressed air. If leakage is indicated, replace cooler.

NOTE

The interior of the cooler must be completely dry before final flush with oil and corrosion preventive compound.

79.2.6.3 Flush oil cooler thoroughly, using mixture of three parts engine oil (C-010), and one part corrosion preventive compound (C-101).

• COPYRIGHT © 2007 BY DART AEROSPACE LTD. •
THIS DOCUMENT IS PRIVATE AND CONFIDENTIAL AND IS SUPPLIED ON THE EXPRESS CONDITION THAT IT IS NOT TO BE USED FOR ANY PURPOSE OR COPIED OR COMMUNICATED TO ANY OTHER PERSON WITHOUT WRITTEN PERMISSION FROM DART AEROSPACE LTD.

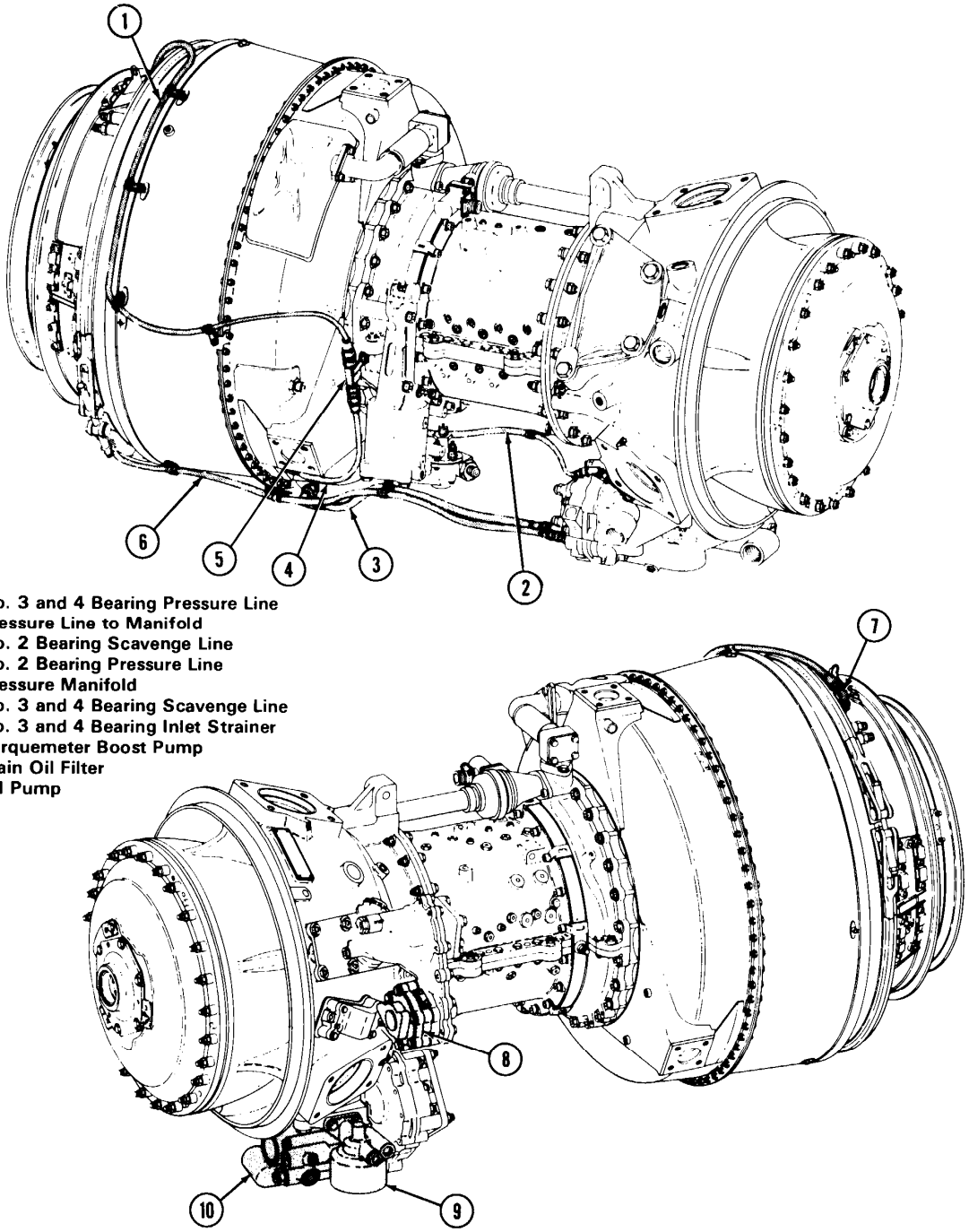

1. No. 3 and 4 Bearing Pressure Line
2. Pressure Line to Manifold
3. No. 2 Bearing Scavenge Line
4. No. 2 Bearing Pressure Line
5. Pressure Manifold
6. No. 3 and 4 Bearing Scavenge Line
7. No. 3 and 4 Bearing Inlet Strainer
8. Torquemeter Boost Pump
9. Main Oil Filter
10. Oil Pump

Figure 79-2. Engine oil system

• COPYRIGHT © 2007 BY DART AEROSPACE LTD. •
THIS DOCUMENT IS PRIVATE AND CONFIDENTIAL AND IS SUPPLIED ON THE EXPRESS CONDITION THAT IT IS NOT TO BE USED FOR ANY PURPOSE OR COPIED OR COMMUNICATED TO ANY OTHER PERSON WITHOUT WRITTEN PERMISSION FROM DART AEROSPACE LTD.

79.3 Engine Oil Tank

79.3.1 Removal – Engine Oil Tank

79.3.1.1 Open right engine cowling. Drain oil tank by opening valve in drain line below tank.

79.3.1.2 Disconnect all lines from tank. Cap or cover all lines.

79.3.1.3 Cut lockwire, loosen tank strap turnbuckles, and remove tank from support. (Refer to Figure 79-1.)

79.3.2 Cleaning – Engine Oil Tank

79.3.2.1 Flush out tank with solvent (C-304).

79.3.2.2 Remove cap and fittings, as necessary.

79.3.2.3 Dry tank with filtered, compressed air.

79.3.3 Inspection – Engine Oil Tank

79.3.3.1 Inspect tank for punctures or leaks, torn or punctured internal screens, and damaged threads in fittings.

79.3.3.2 Inspect removable fittings and sight plugs for damage.

79.3.3.3 Inspect tank support straps and strap pads for damage.

79.3.3.4 Inspect tank support for cracks or damage at mounting points.

79.3.4 Repair/Replacement – Engine Oil Tank

79.3.4.1 Replace tank if any of the following exists:

79.3.4.1.1 Punctures or leaks.

79.3.4.1.2 Torn or punctured internal screens.

79.3.4.1.3 Damaged threads in fittings.

79.3.4.1.4 Any damage which affects capacity or function.

79.3.4.2 Replace packings at reinstallation. Replace any damaged sight plugs or other removable fittings.

79.3.4.3 Replace unserviceable pads on tank straps and support. Replace support assembly if straps are unserviceable,

79.3.5 Installation – Engine Oil Tank

79.3.5.1 Position tank in strap assembly.

79.3.5.2 Align tank with tube assemblies.

79.3.5.3 Attach tube assemblies and hose assemblies.

79.3.5.4 Connect and tighten turnbuckles and secure with lockwire (C-405).

• COPYRIGHT © 2007 BY DART AEROSPACE LTD. •
THIS DOCUMENT IS PRIVATE AND CONFIDENTIAL AND IS SUPPLIED ON THE EXPRESS CONDITION THAT IT IS NOT TO BE USED FOR ANY PURPOSE OR COPIED OR COMMUNICATED TO ANY OTHER PERSON WITHOUT WRITTEN PERMISSION FROM DART AEROSPACE LTD.

79.4 Engine External Oil Filter

79.4.1 Replacement – Engine External Oil Filter Element

79.4.1.1 Open left engine cowling.

79.4.1.2 Drain oil from oil filter.

79.4.1.3 Remove V-band clamp.

79.4.1.4 Remove filter body (5, Figure 79-1) and element and remove packing from top of filter body.

79.4.1.5 Remove filter element from filter body. Remove packings from boss in bottom of body and from boss on filter head.

79.4.1.6 Install new packing in bottom of filter body and on filter head.

79.4.1.7 Place new filter element in filter body and seat firmly on boss.

79.4.1.8 Install new packing around upper lip of body next to flange.

79.4.1.9 Install body with element and packing into filter head.

CAUTION

THE T-BOLT V-BAND CLAMP (8) SHALL BE OF CRES A286 MATERIAL. THE T-BOLTS MANUFACTURED OF CRES A286 MATERIAL CAN BE IDENTIFIED BY EITHER A LETTER B STAMPED ON THREADED END OR A BROWN PAINT SPOT PAINTED ON THREADED END. T-BOLTS OF INCORRECT OR UNIDENTIFIED MATERIAL SHALL BE REMOVED FROM SERVICE NO LATER THAN 1 MAY 1981.

79.4.1.10 Install V-band clamp around mating flanges of filter body and head. Torque nut to 50 inch-pounds.

79.4.1.11 Check for oil leaks and oil tank for servicing after next engine run-up.

79.4.2 Removal – Engine External Oil Filter

79.4.2.1 Open left engine cowling.

79.4.2.2 Drain oil from oil filter.

79.4.2.3 Disconnect inlet, outlet and drain lines from filter.

79.4.2.4 Disconnect electrical connector from filter.

79.4.2.5 Remove four bolts, nuts, and washers securing filter to mounting bracket.

79.4.3 Installation – Engine External Oil Filter

79.4.3.1 Position oil filter to mounting bracket and secure with four bolts, nuts, and washers.

79.4.3.2 Connect electrical connector to filter.

79.4.3.3 Connect inlet, outlet, and drain lines.

79.4.3.4 Close engine cowling.

79.4.3.5 Check filter for leaks and oil tank for servicing at next engine run-up.

• COPYRIGHT © 2007 BY DART AEROSPACE LTD. •
THIS DOCUMENT IS PRIVATE AND CONFIDENTIAL AND IS SUPPLIED ON THE EXPRESS CONDITION THAT IT IS NOT TO BE USED FOR ANY PURPOSE OR COPIED OR COMMUNICATED TO ANY OTHER PERSON WITHOUT WRITTEN PERMISSION FROM DART AEROSPACE LTD.

79.5 Turbo Blower

79.5.1 Removal – Turbo Blower and Duct

79.5.1.1 Open access door at right side of fuselage below engine tailpipe.

79.5.1.2 Remove blower screen.

79.5.1.3 Disconnect air hose from blower inlet fittings.

79.5.1.4 Remove three bolts (22 and 23, Figure 79-1), with nuts, and washers, to detach blower from support bracket.

79.5.1.5 Remove eight bolts and washers to detach blower from duct. Remove blower assembly.

79.5.1.6 Remove eight bolts and washers which secure upper flanges of cooler and mount to sides of duct. Remove duct.

79.5.1.7 Remove blower inlet, remove reducer orifice. Remove and discard packing.

79.5.2 Installation – Turbo Blower and Duct

79.5.2.1 Install reducer orifice, with new packing, in blower inlet.

CAUTION

MAKE SURE REDUCER ORIFICE IS INSTALLED IN BLOWER INLET TO PREVENT BLOWER OVERSPEED

79.5.2.2 Check that support bracket is secured with three screws and washers to fuselage bulkhead.

79.5.2.3 Position blower assembly, with inlet pointing forward at left side, and align mounting holes with duct flange and support bracket.

79.5.2.4 Attach blower to duct with eight bolts, using thin aluminum alloy washer under each bolt head and nut.

79.5.2.5 Attach blower to support bracket with three bolts (22 and 23, Figure 79-1), using thin alloy washer under each bolt head and nut.

79.5.2.6 Connect hose from bleed air valve line to blower inlet.

79.5.2.7 Secure nut (24) to bolts (23) with lockwire (C405)

79.5.2.8 Install screen on blower flange with bolts, washers, grommets, and nuts.

79.5.2.9 Check blower operation at next engine run-up.

• COPYRIGHT © 2007 BY DART AEROSPACE LTD. •
THIS DOCUMENT IS PRIVATE AND CONFIDENTIAL AND IS SUPPLIED ON THE EXPRESS CONDITION THAT IT IS NOT TO BE USED FOR ANY PURPOSE OR COPIED OR COMMUNICATED TO ANY OTHER PERSON WITHOUT WRITTEN PERMISSION FROM DART AEROSPACE LTD.

CHAPTER 95
INSTRUMENT SYSTEM
(95-00-00)

• COPYRIGHT © 2023 BY EAGLE COPTERS MAINTENANCE LTD •
THIS DOCUMENT IS PRIVATE AND CONFIDENTIAL AND IS SUPPLIED ON THE EXPRESS CONDITION THAT IT IS NOT TO BE USED FOR ANY PURPOSE OR COPIED OR COMMUNICATED TO ANY OTHER PERSON WITHOUT WRITTEN PERMISSION FROM EAGLE COPTERS MAINTENANCE LTD.

CHAPTER 95 – INSTRUMENT SYSTEM (95-00-00)

TABLE OF CONTENTS

LIST OF FIGURES 3
95.1 INSTRUMENT SYSTEM 4
95.1.1 Instrument System 4
95.1.2 Troubleshooting – Instrument System 4
95.1.3 Instruments 4
95.1.4 Removal – Instruments 4
95.1.5 Inspection - Instruments 4
95.1.6 Repair or Replacement – Instruments 4
95.1.7 Installation – Instruments 10
95.1.8 Instrument Panel 10
95.1.9 Removal – Instrument Panel 10
95.1.10 Installation – Instrument Panel 10
95.1.11 Adjustment – Instrument Panel 11
95.2 PITOT-STATIC SYSTEM 11
95.2.1 Pitot-Static System 11
95.2.2 Operational Check – Pitot Static System 11
95.2.3 Inspection – Pitot-Static System 14
95.3 STATIC SYSTEM 14
95.3.1 Drain Instructions – Static System 14
95.4 PITOT TUBE 14
95.4.1 Removal – Pitot Tube 14
95.4.2 Installation – Pitot Tube 14
95.5 FLIGHT INSTRUMENTS 15
95.5.1 Flight Instruments 15
95.5.2 Airspeed Indicator 15
95.5.3 Altimeter 15
95.5.4 Attitude Indicator 15
95.5.5 Turn and Bank Indicator 15
95.5.6 Vertical Speed Indicator 15
95.6 NAVIGATION INSTRUMENTS 16
95.6.1 Navigation Instruments 16
95.6.2 Gyro Directional Indicator 16
95.6.3 Standby Magnetic Compass 16
95.6.4 Replacement – Standby Magnetic Compass 16
95.7 PROPULSION AND HYDRAULIC INSTRUMENTS 16
95.7.1 Propulsion And Hydraulic Instruments 16
95.7.2 Torque Pressure Indicator 16
95.7.3 Engine Oil Temperature and Pressure Indicator 16
95.7.4 Fuel Pressure Indicator 16
95.7.5 Fuel Quantity Indicator 17
95.7.6 Gas Producer Tachometer Indicator 17
95.7.7 Hydraulic Temperature and Pressure Indicators 17
95.7.8 Transmission Oil Temperature and Pressure Indicator 17
95.7.9 Dual Tachometer Indicator 17
95.7.10 Measured Gas Temperature (MGT) Indicator (-17B Engines) 17
95.7.11 Exhaust Gas Temperature (EGT) Indicator (-17A Engines) 17
95.8 MISCELLANEOUS INSTRUMENTS 18

• COPYRIGHT © 2023 BY EAGLE COPTERS MAINTENANCE LTD •
THIS DOCUMENT IS PRIVATE AND CONFIDENTIAL AND IS SUPPLIED ON THE EXPRESS CONDITION THAT IT IS NOT TO BE USED FOR ANY PURPOSE OR COPIED OR COMMUNICATED TO ANY OTHER PERSON WITHOUT WRITTEN PERMISSION FROM EAGLE COPTERS MAINTENANCE LTD.

CHAPTER 95 – INSTRUMENT SYSTEM (95-00-00)

95.8.1 Miscellaneous Instruments 18
95.8.2 Clock 18
95.8.3 AC and DC Dual Voltmeter 18
95.8.4 Loadmeter 18
95.8.5 Free Air Temperature Indicator 18
95.8.6 Removal – Free Air Temperature Indicator 18
95.8.7 Installation – Free Air Temperature Indicator 18
95.8.8 Engine Hourmeter 19

LIST OF FIGURES

Figure 95-1. Eagle Single Instrument Panel (Page 1 of 2) 5
Figure 95-1. Eagle Single Instrument Panel (Page 2 of 2) 6
Figure 95-2. Eagle Single Instrument Panel (Page 1 of 3) 7
Figure 95-2. Eagle Single Instrument Panel (Page 2 of 3) 8
Figure 95-2. Eagle Single Instrument Panel (Page 3 of 3) 9
Figure 95-3. Pitot-Static System 13
Figure 95-4. Pitot-Static System 14
Figure 95-5. Free Air Temperature Indicator 18

• COPYRIGHT © 2023 BY EAGLE COPTERS MAINTENANCE LTD •
THIS DOCUMENT IS PRIVATE AND CONFIDENTIAL AND IS SUPPLIED ON THE EXPRESS CONDITION THAT IT IS NOT TO BE USED FOR ANY PURPOSE OR COPIED OR COMMUNICATED TO ANY OTHER PERSON WITHOUT WRITTEN PERMISSION FROM EAGLE COPTERS MAINTENANCE LTD.

CHAPTER 95 – INSTRUMENT SYSTEM (95-00-00)

95.1 INSTRUMENT SYSTEM

95.1.1 Instrument System

Maintenance information for flight, navigation, propulsion, and hydraulic and miscellaneous instruments installed in this helicopter is presented in the following sections. All instruments with the exceptions of the standby magnetic compass, engine hourmeter, and free air temperature indicator, are mounted in the instrument panel. For instrument panel illustration, see Figure 95-1 and Figure 95-2

95.1.2 Troubleshooting – Instrument System

Pitot-static system troubleshooting procedures are covered as portions of the airspeed indicator, altimeter, and vertical speed indicator. Refer to paragraph 95.2 for pitot-static system. Electrically operated instruments are covered in Chapter 96.

95.1.3 Instruments

The following instrument maintenance information is basically applicable to all instruments; therefore, general procedures are given in the following steps.

95.1.4 Removal – Instruments

CAUTION

ENSURE ALL ELECTRICAL POWER IS OFF

NOTE

General procedures for removing instruments from the instrument panel are applicable to all panel mounted instruments; therefore, only a typical procedure is given. Some instruments are front mounted, other instruments are back mounted. They are secured either by screws through mounting flanges or by clamps with clamp adjusting screws accessible on the panel face.

95.1.4.1 Disconnect electrical leads and/or instrument piping, as applicable, from back of instrument. Necessary access may be gained through the nose access door.

95.1.4.2 Protect ends with electrical tape and cap open piping, if applicable, and cap openings on Instrument.

95.1.4.3 Removed mounting screws or loosen mounting clamp screw. carefully lift instrument out of panel.

95.1.5 Inspection - Instruments

95.1.5.1 Inspect for loose, missing or improperly installed hardware, loose or cracked cover glasses, and security of mounting.

95.1.5.2 Inspect instrument for legibility of range markings and faulty decals.

95.1.6 Repair or Replacement – Instruments

NOTE

All repairs, with the exception of replacing instruments or instrument range makings, must be conducted by an authorized instrument repair station.

95.1.6.1 Replace an inoperative, defective, or damaged instrument

95.1.6.2 Replace instrument if cover glass is loose, cracked, or broken.

95.1.6.3 On instruments with exterior markings, replace instrument range markings as follows:

95.1.6.3.1 Refer to FMS-D212-725-1 for range. Index cover glass to case with strip of white lacquer.

95.1.6.3.2 Use prepared decals, suitable lacquer or tape for markings and apply accurately to cover glass. Protect markings with a light coat of clear adhesive varnish or lacquer.

95.1.6.4 On instruments with internal markings, return instrument to appropriate repair facility for replacement of range marking if necessary.

• COPYRIGHT © 2023 BY EAGLE COPTERS MAINTENANCE LTD •
THIS DOCUMENT IS PRIVATE AND CONFIDENTIAL AND IS SUPPLIED ON THE EXPRESS CONDITION THAT IT IS NOT TO BE USED FOR ANY PURPOSE OR COPIED OR COMMUNICATED TO ANY OTHER PERSON WITHOUT WRITTEN PERMISSION FROM EAGLE COPTERS MAINTENANCE LTD.

CHAPTER 95 – INSTRUMENT SYSTEM (95-00-00)

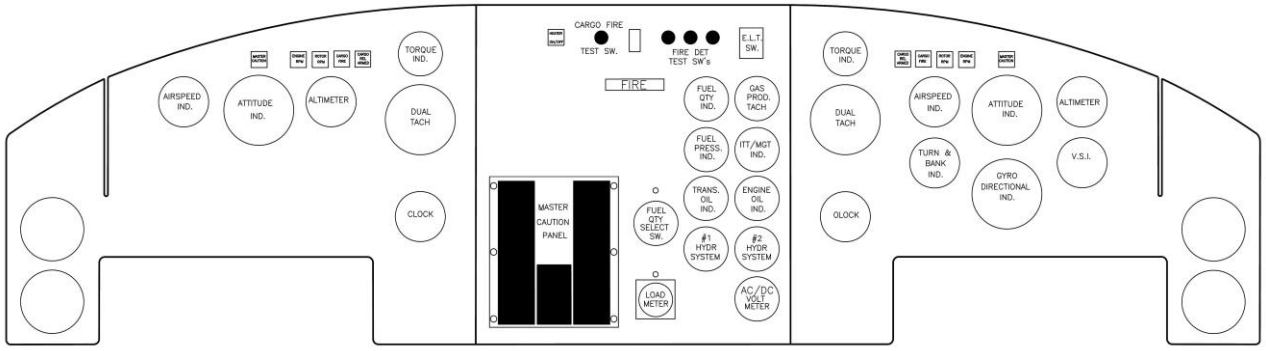

EAGLE SINGLE INSTRUMENT PANEL

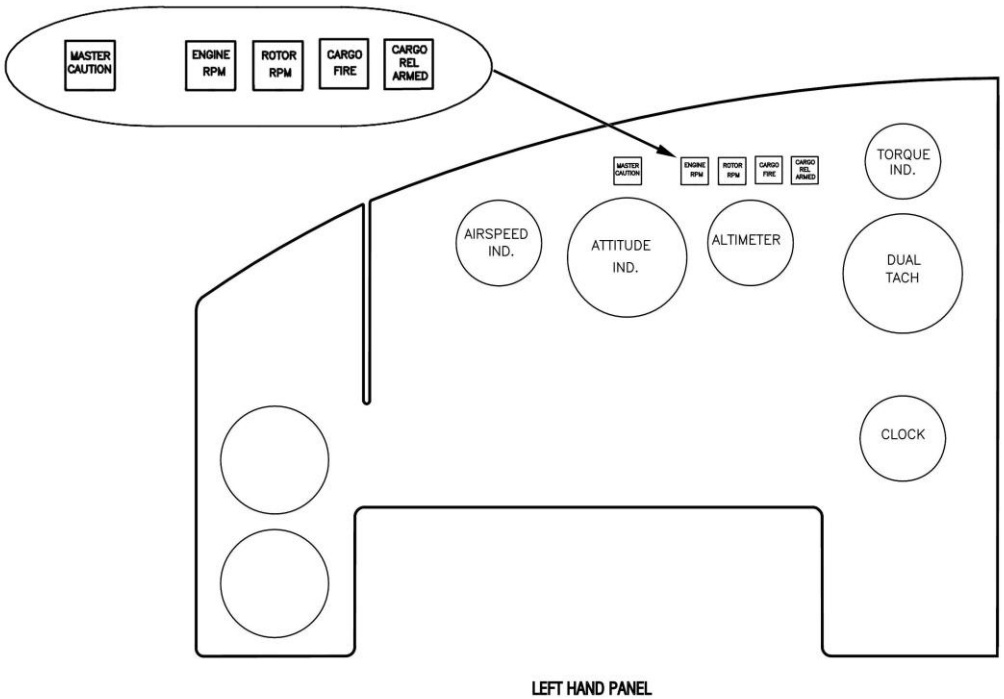

LEFT HAND PANEL

Figure 95-1. Eagle Single Instrument Panel (Page 1 of 2)
(S/Ns 30817, 30687, and 30599 only)

• COPYRIGHT © 2023 BY EAGLE COPTERS MAINTENANCE LTD •
THIS DOCUMENT IS PRIVATE AND CONFIDENTIAL AND IS SUPPLIED ON THE EXPRESS CONDITION THAT IT IS NOT TO BE USED FOR ANY PURPOSE OR COPIED OR COMMUNICATED TO ANY OTHER PERSON WITHOUT WRITTEN PERMISSION FROM EAGLE COPTERS MAINTENANCE LTD.

CHAPTER 95 – INSTRUMENT SYSTEM (95-00-00)

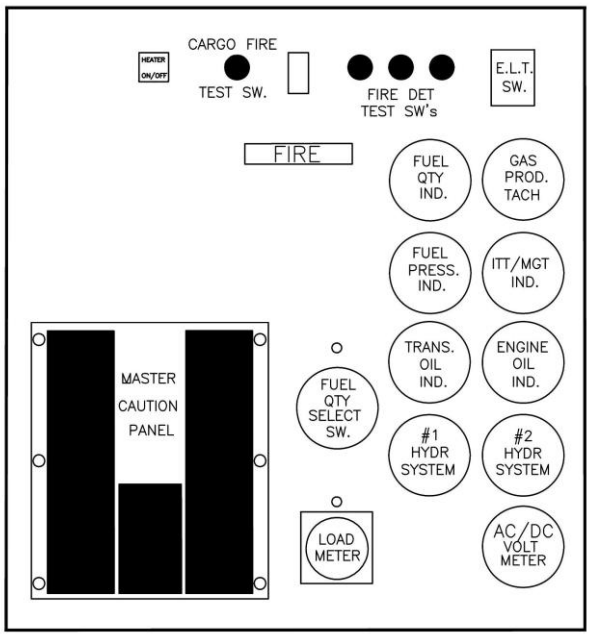

CENTER PANEL

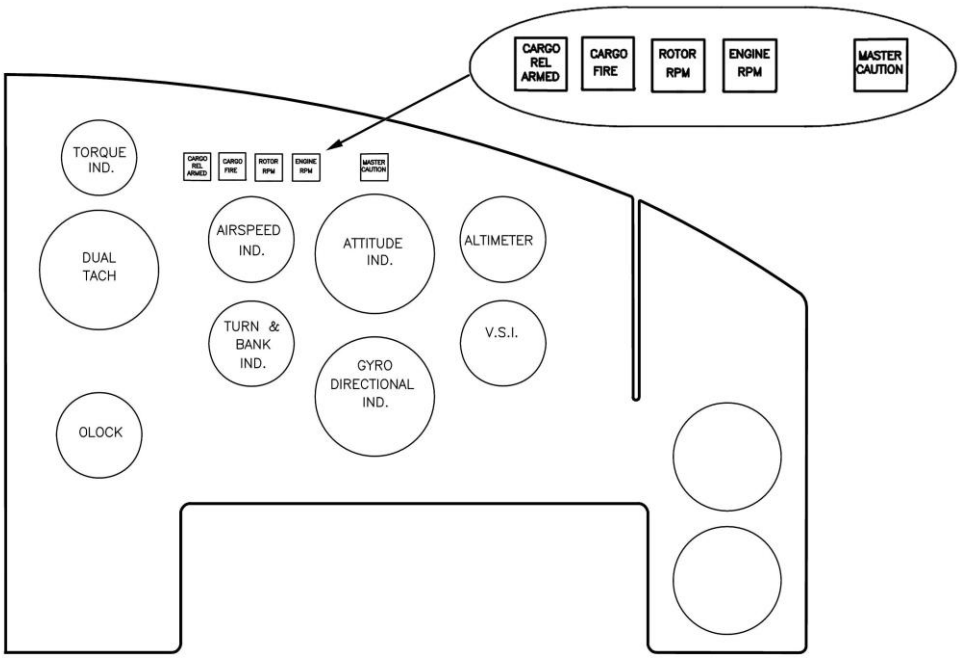

RIGHT HAND PANEL

Figure 95-1. Eagle Single Instrument Panel (Page 2 of 2)
(S/Ns 30817, 30687, and 30599 only)

• COPYRIGHT © 2023 BY EAGLE COPTERS MAINTENANCE LTD •
THIS DOCUMENT IS PRIVATE AND CONFIDENTIAL AND IS SUPPLIED ON THE EXPRESS CONDITION THAT IT IS NOT TO BE USED FOR ANY PURPOSE OR COPIED OR COMMUNICATED TO ANY OTHER PERSON WITHOUT WRITTEN PERMISSION FROM EAGLE COPTERS MAINTENANCE LTD.

CHAPTER 95 – INSTRUMENT SYSTEM (95-00-00)

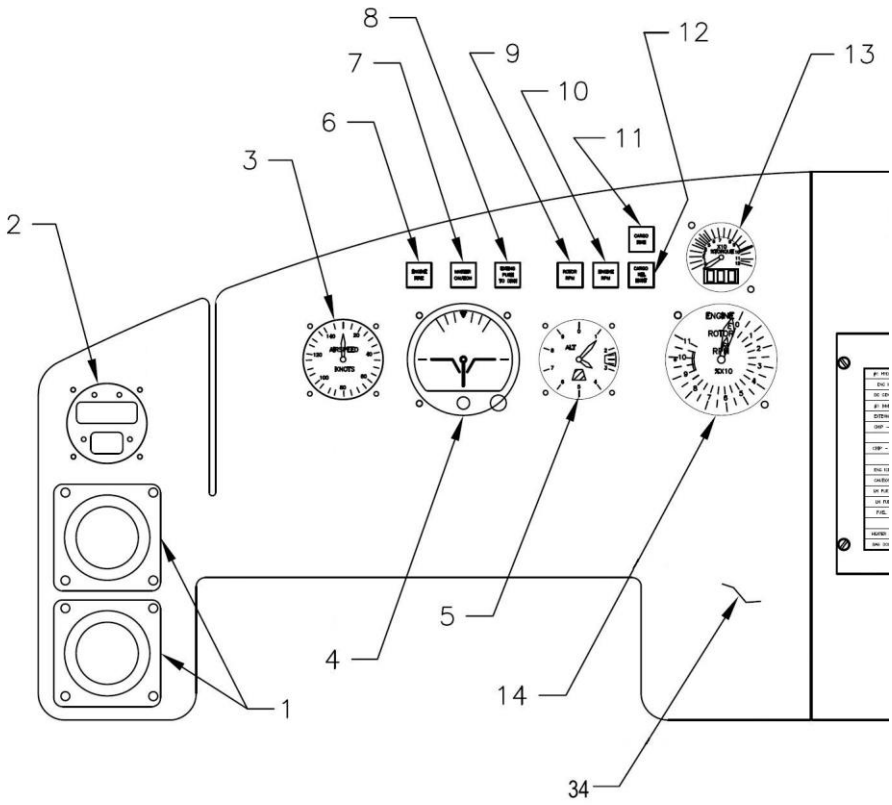

Item Number	Description	Item Number	Description	Item Number	Description
1	Air Vent	7	Master Caution Light	13	Torque Pressure Indicator
2	Clock	8	Fire Extinguisher Switchlight	14	Dual Tach Indicator
3	Airspeed Indicator	9	Rotor RPM Light	34	Instrument Panel, LH
4	Attitude Indicator	10	Engine RPM Light		
5	Altimeter	11	Cargo Fire Light		
6	Engine Fire Switchlight	12	Cargo Release Armed Light		

Figure 95-2. Eagle Single Instrument Panel (Page 1 of 3)
(All S/Ns except 30817, 30687, and 30599)

• COPYRIGHT © 2023 BY EAGLE COPTERS MAINTENANCE LTD •
THIS DOCUMENT IS PRIVATE AND CONFIDENTIAL AND IS SUPPLIED ON THE EXPRESS CONDITION THAT IT IS NOT TO BE USED FOR ANY PURPOSE OR COPIED OR COMMUNICATED TO ANY OTHER PERSON WITHOUT WRITTEN PERMISSION FROM EAGLE COPTERS MAINTENANCE LTD.

CHAPTER 95 – INSTRUMENT SYSTEM (95-00-00)

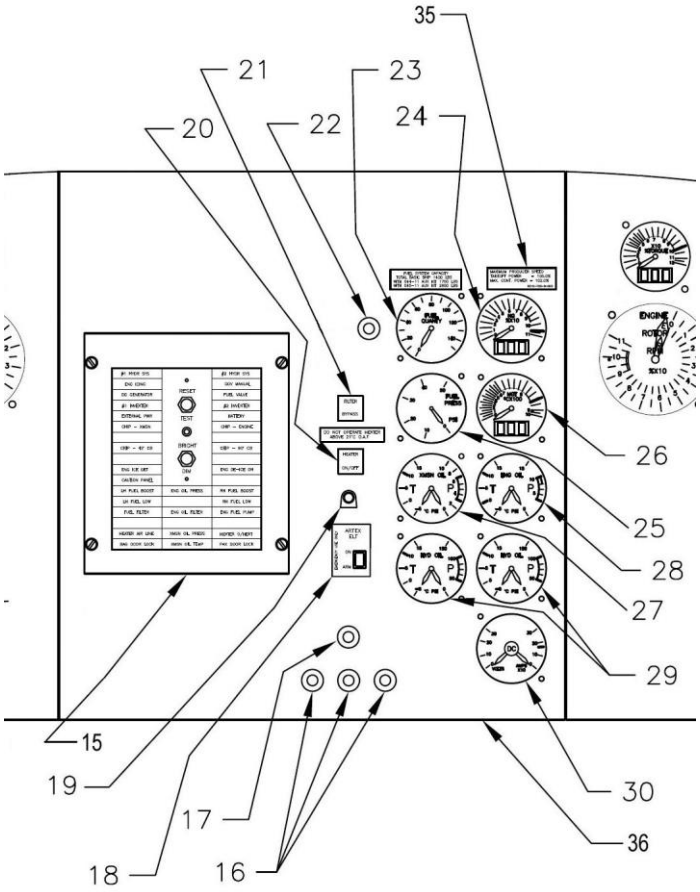

Item Number	Description	Item Number	Description	Item Number	Description
15	Master Caution Panel	21	Filter Bypass Switch light	27	Trans Oil Press/Temp
16	Fire Test Switch	22	Fuel Quantity Test Switch	28	Engine Oil Press/Temp
17	Cargo Fire Switch	23	Fuel Quantity Indicator	29	Hydraulic Oil Press/Temp
18	ELT Test Switch	24	Gas Producer Tachometer	30	Voltmeter/Ammeter
19	Heater Light	25	Fuel Pressure Indicator	35	Placard
20	Heater Switch	26	MGT Indicator	36	Instrument Panel, Center

Figure 95-2. Eagle Single Instrument Panel (Page 2 of 3)
(All S/Ns except 30817, 30687, and 30599)

• COPYRIGHT © 2023 BY EAGLE COPTERS MAINTENANCE LTD •
THIS DOCUMENT IS PRIVATE AND CONFIDENTIAL AND IS SUPPLIED ON THE EXPRESS CONDITION THAT IT IS NOT TO BE USED FOR ANY PURPOSE OR COPIED OR COMMUNICATED TO ANY OTHER PERSON WITHOUT WRITTEN PERMISSION FROM EAGLE COPTERS MAINTENANCE LTD.

CHAPTER 95 – INSTRUMENT SYSTEM (95-00-00)

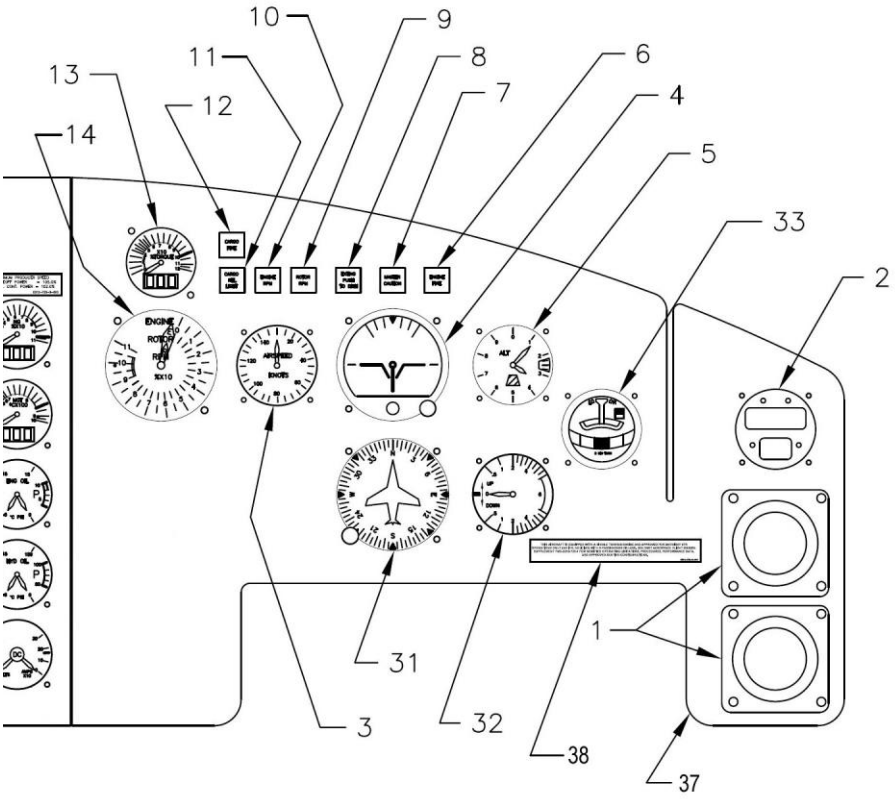

Item Number	Description	Item Number	Description	Item Number	Description
1	Air Vent	7	Master Caution Light	13	Torque Pressure Indicator
2	Clock	8	Fire Extinguisher Switchlight	14	Dual Tach Indicator
3	Airspeed Indicator	9	Rotor RPM Light	31	Directional Gyro
4	Attitude Indicator	10	Engine RPM Light	32	IVSI
5	Altimeter	11	Cargo Fire Light	37	Instrument Panel, RH
6	Engine Fire Switchlight	12	Cargo Release Armed Light	38	Placard

Figure 95-2. Eagle Single Instrument Panel (Page 3 of 3)
(All S/Ns except 30817, 30687 and 30599)

• COPYRIGHT © 2023 BY EAGLE COPTERS MAINTENANCE LTD •
THIS DOCUMENT IS PRIVATE AND CONFIDENTIAL AND IS SUPPLIED ON THE EXPRESS CONDITION THAT IT IS NOT TO BE USED FOR ANY PURPOSE OR COPIED OR COMMUNICATED TO ANY OTHER PERSON WITHOUT WRITTEN PERMISSION FROM EAGLE COPTERS MAINTENANCE LTD.

95.1.7 Installation – Instruments

CAUTION

ENSURE ALL ELECTRICAL POWER IS OFF

NOTE

The general procedures for installing instruments into the instrument panel are applicable to all panel mounted instruments; therefore, only a typical procedure is given. Some instruments are front mounted, other instruments are back mounted. They are secured either by screws through mounting flanges or by clamps with clamp adjusting screws accessible on the panel face.

95.1.7.1 Carefully position instrument in panel and install mounting screws or tighten screw of mounting clamp.

CAUTION

DO NOT TIGHTEN CLAMPS MORE THAN NECESSARY TO HOLD INSTRUMENT. EXCESSIVE TENSION MAY DEFORM INSTRUMENT CASE AND CAUSE ERRONEOUS READING OR CRACKED GLASS.

95.1.7.2 Remove protective tape, caps, and covers as necessary, from electrical leads, piping and openings on instrument.

95.1.7.3 Connect electrical leads and/or instrument piping, as applicable, to back of instrument.

95.1.8 Instrument Panel

Instrument panel contains all flight, propulsion, navigation and miscellaneous instruments except standby magnetic compass, engine hourmeter, and free air temperature indicator. For information on various switches, warning lights and fire pull handle, refer to Chapter 96.

95.1.9 Removal – Instrument Panel

95.1.9.1 Disconnect battery quick disconnect.

95.1.9.2 Disconnect pitot-static tubing from instruments and cap open tubing. Remove electrical connectors from Master Caution panel and instrument panel disconnects.

95.1.9.3 Disconnect the two adjustment tube assemblies from behind the instrument panel, one on each side.

95.1.9.4 Remove mounting screws from glareshield and carefully remove glareshield from forward side of panel.

95.1.9.5 Remove remaining mounting screws from panel and carefully remove instrument panel.

95.1.10 Installation – Instrument Panel

95.1.10.1 Position instrument panel in place and install mounting screws.

95.1.10.2 Install glareshield on forward side of panel.

95.1.10.3 Connect the two adjustment tube assemblies to the instrument panel.

95.1.10.4 Remove protective caps and connect from pitot-static tubing. Connect all electrical connectors.

95.1.10.5 Connect battery quick disconnect.

• COPYRIGHT © 2023 BY EAGLE COPTERS MAINTENANCE LTD •
THIS DOCUMENT IS PRIVATE AND CONFIDENTIAL AND IS SUPPLIED ON THE EXPRESS CONDITION THAT IT IS NOT TO BE USED FOR ANY PURPOSE OR COPIED OR COMMUNICATED TO ANY OTHER PERSON WITHOUT WRITTEN PERMISSION FROM EAGLE COPTERS MAINTENANCE LTD.

CHAPTER 95 – INSTRUMENT SYSTEM (95-00-00)

95.1.11 Adjustment – Instrument Panel

Two adjustment tube assemblies located behind each side of the instrument panel may be adjusted to eliminate or minimize instrument panel vibration.

95.2 PITOT-STATIC SYSTEM

95.2.1 Pitot-Static System

Pitot system consists of 2 pitot tubes, tubing and necessary hardware to connect to the pilot and copilot airspeed indicators. The pitot tubes are mounted on the fuselage nose section and supply impact air through pitot lines to the airspeed indicators. The pitot tubes are equipped with an electrical heating element for anti-icing function. Any accumulation of moisture in the pitot lines will drain by gravity, therefore no drain plugs are installed. For information on the pitot heater electrical system, refer to Chapter 96. The static system consists of 4 static ports, static lines and necessary hardware to supply static pressure to the pilot altimeter, airspeed and vertical speed indicators and the copilot altimeter and airspeed indicators. The static ports are flush mounted on the fuselage section, 2 on each side, just forward of the pilot and copilot doors.

95.2.2 Operational Check – Pitot Static System

SPECIAL TEST EQUIPMENT

TYPE OR MODEL	NOMENCLATURE
MB-1 (TACTAIR) or EQUIVALENT	STATIC FIELD TESTER

NOTE

Perform the following procedure in its entirety for the pilot pitot-static system and altimeter, vertical speed, and airspeed indicators. Repeat the procedure for the copilot system and indicators.

95.2.2.1 Connect the pitot-static tester hoses to the appropriate connectors on the test set. Connect the pitot line to the pitot tube, and connect the static line to the lower RH static port. Seal the upper LH static port with removable tape. Check all connections for tightness.

95.2.2.2 Open both vent valves to allow pressure in the lines to equalize. Close all five valves on the test set and check that each is completely closed.

95.2.2.3 Set barometric pressure dials on pilots altimeter and on the test set to 29.92” Hg. Check that pilots altimeter reads the same as the test set altimeter within 20 feet.

95.2.2.4 Pump pressure into pressure tank on test set until sufficient pressure for test is indicated on pressure dial. Pressure in the tank may be replenished as required during the test.

CAUTION

VALVES ON TEST SET ARE SENSITIVE AND SHOULD BE OPERATED SLOWLY AND WITH CARE TO AVOID POSSIBLE DAMAGE TO INSTRUMENTS. THESE INSTRUMENTS ARE EASILY DAMAGED BY IMPROPER MANIPULATION OF THE VALVES ON THE TEST SET.

95.2.2.5 Open pressure vent valve approximately ¼ turn. Slowly open pressure source valve. Close pressure vent valve. Slowly bring airspeed up until test set reads 130 knots, then close pressure source valve. Verify pilots airspeed indicator reads 130 knots +/- 4 knots and that after 5 minutes, airspeed has not dropped more than 10 knots.

95.2.2.6 Slowly open pressure vent valve. Check that airspeed indication returns to a minimum limit.

• COPYRIGHT © 2023 BY EAGLE COPTERS MAINTENANCE LTD •
THIS DOCUMENT IS PRIVATE AND CONFIDENTIAL AND IS SUPPLIED ON THE EXPRESS CONDITION THAT IT IS NOT TO BE USED FOR ANY PURPOSE OR COPIED OR COMMUNICATED TO ANY OTHER PERSON WITHOUT WRITTEN PERMISSION FROM EAGLE COPTERS MAINTENANCE LTD.

CHAPTER 95 – INSTRUMENT SYSTEM (95-00-00)

CAUTION

DO NOT DISCONNECT A LINE OR REMOVE A FITTING TO VENT SYSTEM WHILE UNDER TEST AS DAMAGE TO INSTRUMENTS MAY OCCUR.

95.2.2.7 Pump vacuum side until sufficient vacuum for test is indicated on the vacuum dial. Vacuum in the tank may be replenished as required during the test.

95.2.2.8 Slowly and gradually open vacuum source valve. Check that both altimeter and airspeed indicator readings increase and that vertical speed indicator shows a positive rate of climb.

CAUTION

VALVES ON TEST SET ARE SENSITIVE AND SHOULD BE OPERATED SLOWLY AND WITH CARE TO AVOID POSSIBLE DAMAGE TO INSTRUMENTS. CLOSELY MONITOR BOTH HELICOPTER AND TEST SET INSTRUMENTS TO ENSURE THAT NO INDICATOR MAXIMUM LIMIT IS EXCEEDED.

95.2.2.9 Slowly increase airspeed to approximately 80 knots and close vacuum source valve and pressure vent valve. Hold airspeed at around 80 knots and increase altitude by manipulating the crossfeed and vacuum source valves. At approximately 2000 feet above current indication close both the crossfeed and vacuum source valves. Verify pilots altimeter reads with +/- 20 feet of test set indicator, and that after 1 minute, indicated loss of altitude shall not exceed 100 feet. Check that vertical speed indication is zero or negative, not exceeding 100 fpm.

CAUTION

DO NOT DISCONNECT A LINE OR REMOVE A FITTING TO VENT SYSTEM WHILE UNDER TEST AS DAMAGE TO INSTRUMENTS MAY OCCUR.

95.2.2.10 Slowly open vacuum vent valve and observe pilots altimeter and test set altimeter returns to previous indicated altitude.

95.2.2.11 Slowly open pressure vent valve and observe pilots airspeed and test set indicator returns to minimum limit.

95.2.2.12 Remove hoses and tape installed in step 95.2.2.1.

95.2.2.13 Repeat above steps 95.2.2.1 through 95.2.2.12 for copilots airspeed indicator and altimeter.

• COPYRIGHT © 2023 BY EAGLE COPTERS MAINTENANCE LTD •
THIS DOCUMENT IS PRIVATE AND CONFIDENTIAL AND IS SUPPLIED ON THE EXPRESS CONDITION THAT IT IS NOT TO BE USED FOR ANY PURPOSE OR COPIED OR COMMUNICATED TO ANY OTHER PERSON WITHOUT WRITTEN PERMISSION FROM EAGLE COPTERS MAINTENANCE LTD.

CHAPTER 95 – INSTRUMENT SYSTEM (95-00-00)

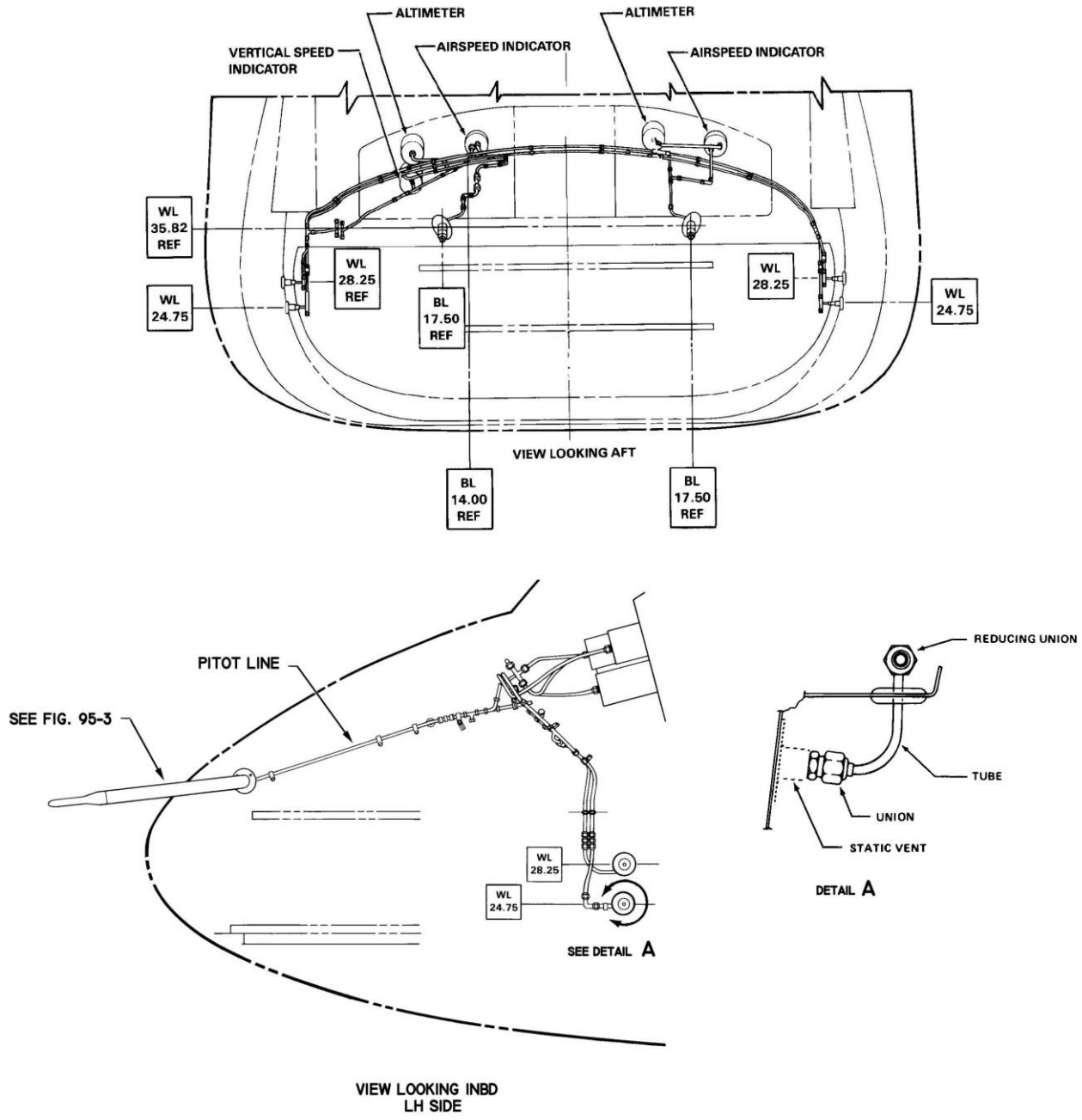

Figure 95-3. Pitot-Static System

• COPYRIGHT © 2023 BY EAGLE COPTERS MAINTENANCE LTD •
THIS DOCUMENT IS PRIVATE AND CONFIDENTIAL AND IS SUPPLIED ON THE EXPRESS CONDITION THAT IT IS NOT TO BE USED FOR ANY PURPOSE OR COPIED OR COMMUNICATED TO ANY OTHER PERSON WITHOUT WRITTEN PERMISSION FROM EAGLE COPTERS MAINTENANCE LTD.

CHAPTER 95 – INSTRUMENT SYSTEM (95-00-00)

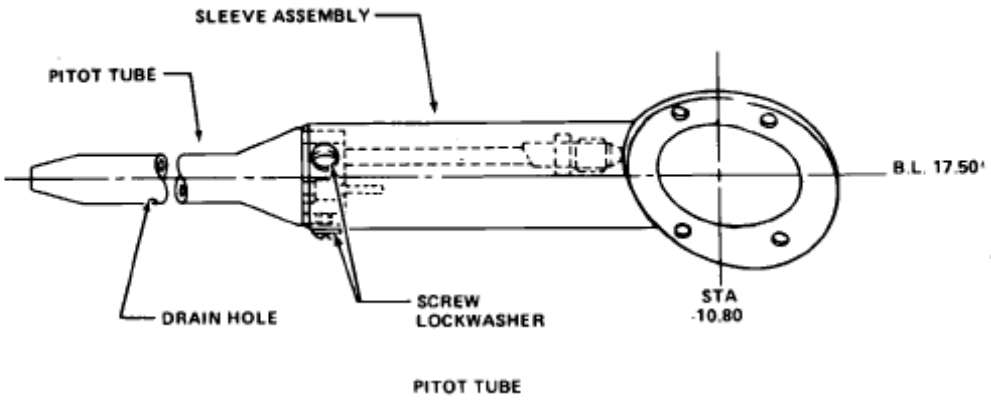

Figure 95-4. Pitot-Static System

95.2.3 Inspection – Pitot-Static System

95.2.3.1 Inspect pitot tube for clogged or obstructed inlet opening.

95.2.3.2 Inspect pitot tube for clogged drain hole on bottom of tube.

95.2.3.3 Inspect pitot and static lines for leaks and chafing.

95.2.3.4 Visually inspect pitot and static lines, accessories and instruments of the pitot static system and replace defective components.

95.3 STATIC SYSTEM

95.3.1 Drain Instructions – Static System

95.3.1.1 Disconnect static lines from airspeed, altimeter and vertical speed indicators. Cap openings in indicators.

95.3.1.2 Blow static lines clean with dry, filtered compressed air.

95.3.1.3 Uncap openings in indicators and reconnect lines.

95.4 PITOT TUBE

95.4.1 Removal – Pitot Tube

95.4.1.1 Ensure all electrical power is OFF

95.4.1.2 Disconnect pitot line from tubing in upper nose compartment.

95.4.1.3 Remove screws and lockwashers attaching pitot tube to support and carefully pull tube from support until electrical connector is exposed. Disconnect electrical connector.

NOTE
Ensure adequate slack in electric wire before pulling pitot tube.

95.4.2 Installation – Pitot Tube

95.4.2.1 Remove caps or covers from pitot lines.

95.4.2.2 Remove caps from ends of electrical connector attached to pitot head and connect electrical connector while guiding pitot line and

• COPYRIGHT © 2023 BY EAGLE COPTERS MAINTENANCE LTD •
THIS DOCUMENT IS PRIVATE AND CONFIDENTIAL AND IS SUPPLIED ON THE EXPRESS CONDITION THAT IT IS NOT TO BE USED FOR ANY PURPOSE OR COPIED OR COMMUNICATED TO ANY OTHER PERSON WITHOUT WRITTEN PERMISSION FROM EAGLE COPTERS MAINTENANCE LTD.

electrical wire through the pitot support. Carefully align pitot tube in the support.

95.4.2.3 Install attaching screws and lockwashers attaching pitot tube to pitot support.

95.4.2.4 Connect pitot line tubing to pitot tube in upper nose area.

95.4.2.5 Perform pitot system leak check as per 95.2.2 on affected system.

95.5 FLIGHT INSTRUMENTS

95.5.1 Flight Instruments

Flight instruments consist of airspeed, altimeter, attitude, turn and bank, and vertical speed indicators.

95.5.2 Airspeed Indicator

Airspeed indicators (pilot M30 and copilot M35) are standard pitot static instruments, single scaled, and calibrated in knots. The indicators provide an airspeed of the helicopter at any time during forward flight by measuring the difference between impact air pressure from the pitot tube and static air pressure from the static ports.

95.5.3 Altimeter

Altimeters (pilot M32 and copilot M33) furnish direct reading of the helicopter height in feet above sea level. The altimeters are connected by static lines to the static pressure ports to sense atmospheric pressure. An external adjustment knob is provided to make compensation for variations of prevailing barometric pressure.

95.5.4 Attitude Indicator

Attitude indicators (pilot M2 and copilot M1) display flight attitude of the helicopter relative to the earth. Pitch attitude is indicated by motion of the virtual sphere with respect to the yellow reference bars. Roll attitude is indicated by motion of the roll pointer with respect to the fixed scale located at the top of the display. The indicator virtual sphere can be adjusted for zero pitch indication by using the 2 position switch located on the front face of the unit. If the indicator loses power the display will go blank. Horizontal markings indicate the degree of dive or climb, while bank (roll) angles are read from the semi-circular scale located on the upper half of the indicator face.

95.5.5 Turn and Bank Indicator

Pilot turn and bank indicator (M10) consists of a rate-of-turn pointer and an inclinometer (ball) which operate independently of each other. An indicator gyro is self-contained in the indicator. The rate-of-turn pointer is controlled by a self contained electrically actuated gyro, and indicates in which direction and at what rate the helicopter is turning. The inclinometer (ball) indicates when the helicopter is in directional balance either in a turn or in straight and level flight. If the helicopter is yawing or slipping, the ball will be off center.

95.5.6 Vertical Speed Indicator

Pilot vertical speed indicator (M31) and copilot vertical speed indicator (M34) register ascent and descent speed of the helicopter in feet per minute. The vertical speed indicators are connected to static air system to sense the rate of atmospheric pressure change.

• COPYRIGHT © 2023 BY EAGLE COPTERS MAINTENANCE LTD •
THIS DOCUMENT IS PRIVATE AND CONFIDENTIAL AND IS SUPPLIED ON THE EXPRESS CONDITION THAT IT IS NOT TO BE USED FOR ANY PURPOSE OR COPIED OR COMMUNICATED TO ANY OTHER PERSON WITHOUT WRITTEN PERMISSION FROM EAGLE COPTERS MAINTENANCE LTD.

CHAPTER 95 – INSTRUMENT SYSTEM (95-00-00)

95.6 NAVIGATION INSTRUMENTS

95.6.1 Navigation Instruments

The navigation instruments consist of the pilot gyro directional indicator and the standby magnetic compass (M28).

95.6.2 Gyro Directional Indicator

The gyro directional indicator is a 28VDC, self contained unit which displays directional information on a compass card through an azimuth gimbal on the gyro. The heading knob, located on the face of the unit, allows selection of the desired heading. Upon depressing this knob, the gyro inner axis is automatically aligned perpendicular with the azimuth gimbal.

95.6.3 Standby Magnetic Compass

The standby magnetic compass (M28) is mounted on the right side of the helicopter over the windshield. This standard magnetic type compass is used in conjunction with the compass correction card located on the windshield center post.

95.6.4 Replacement – Standby Magnetic Compass

95.6.4.1 Remove mounting screws from mounting bracket while holding compass in place.

25.6.4.2 Carefully remove the compass from the bracket.

25.6.4.3 Carefully position the compass in the mounting bracket and install the mounting screws.

25.6.4.4 Tap the edge of the compass case lightly to check that the compass card is free.

25.6.4.5 Perform compensation adjustment.

95.7 PROPULSION AND HYDRAULIC INSTRUMENTS

95.7.1 Propulsion And Hydraulic Instruments

Propulsion and hydraulic instruments consist of torque pressure, engine oil temperature and pressure, fuel pressure, fuel quantity, gas producer tachometer, hydraulic temperature and pressure, transmission oil temperature and pressure, dual tachometer, and measured gas temperature or exhaust gas temperature indicators.

95.7.2 Torque Pressure Indicator

Torque pressure indicators (pilot M20 and copilot M19) display torque output of the engine. Each indicator receives its' own signal from a separate torque pressure transmitter located on the engine. For S/Ns 30687, 30817 and 30599 the indications are in PSI. For all S/Ns except 30687, 30817 and 30599 the indications are in percent.

95.7.3 Engine Oil Temperature and Pressure Indicator

Engine oil temperature and pressure indicator (M5) is a dual type indicator registering temperature (degrees Celsius) and pressure (psig) for the engine. The temperature portion receives temperature indications from an electrical resistance type bulb and the pressure portion receives pressure indications from an engine oil pressure transmitter. For S/Ns 30687, 30817 and 30599 the temperature portion is 28 VDC powered and the pressure portion is 26 VAC powered. For all S/Ns except 30687, 30817 and 30599 both the temperature portion and the pressure portion are 28 VDC.

95.7.4 Fuel Pressure Indicator

Engine fuel pressure indicator (M3) registers fuel pressure (psig) from indications received from the fuel pressure transmitter. For S/Ns 30687, 30817 and 30599 the system is powered from the 26 VAC bus # 1. For all S/Ns except 30687, 30817

• COPYRIGHT © 2023 BY EAGLE COPTERS MAINTENANCE LTD •
THIS DOCUMENT IS PRIVATE AND CONFIDENTIAL AND IS SUPPLIED ON THE EXPRESS CONDITION THAT IT IS NOT TO BE USED FOR ANY PURPOSE OR COPIED OR COMMUNICATED TO ANY OTHER PERSON WITHOUT WRITTEN PERMISSION FROM EAGLE COPTERS MAINTENANCE LTD.

and 30599 the system is powered from the 28 VDC bus.

95.7.5 Fuel Quantity Indicator

The fuel quantity indicator (M25) provides readings of fuel supply quantity in total pounds. For S/N 30687, a fuel quantity selector switch allows for indication of fuel quantity as determined by the position of the switch (LEFT, TOTAL or RIGHT). For all S/Ns except 30687, a fuel quantity test switch has replaced the fuel quantity select switch and allows for a confidence check of the indicator only. The indicator displays total fuel quantity at all times. In either case the system is powered from the 115VAC bus.

95.7.6 Gas Producer Tachometer Indicator

The engine gas producer tachometer indicator (M17) registers percent rpm of the engine gas producer speed. The gas producer tachometer generator sends voltage signals to the indicator proportional to engine gas producer speed. For S/Ns 30687, 30817 and 30599 the gas producer tachometer indicator system is self-generating. All S/Ns except 30687, 30817 and 30599 use 28 VDC power to display a digital readout and store any exceedances.

95.7.7 Hydraulic Temperature and Pressure Indicators

Hydraulic system 1 and 2 temperature and pressure indicators (M36 and M37) are dual type indicators registering hydraulic oil temperature (degrees Celsius) and hydraulic pressure (psig). For S/Ns 30687, 30817 and 30599 the pressure portion is powered by the 26 VAC busses and registers indications received from 2 hydraulic pressure transmitters. For all S/Ns except 30687, 30817 and 30599 both the temperature portion and the pressure portion are 28 VDC.

95.7.8 Transmission Oil Temperature and Pressure Indicator

Transmission oil temperature and pressure indicator (M16) is a dual type indicator registering temperature (degrees Celsius) and pressure (psig) of oil in the transmission. The temperature portion receives temperature indications from an electrical resistance type bulb and the pressure portion receives pressure indications from an oil pressure transmitter. For S/Ns 30687, 30817 and 30599 the temperature portion is 28 VDC powered and the pressure portion is 26 VAC powered. For all S/Ns except 30687, 30817 and 30599 both the temperature portion and the pressure portion are 28 VDC.

95.7.9 Dual Tachometer Indicator

The dual tachometer indicators (pilot M12 and copilot M11) contains two pointers and simultaneously register engine power turbine and main rotor rpm in percentage. Power is provided by two tachometer generators mounted on the engine and transmission respectively. Both indicators receive indications from each of the tachometer generators. For S/Ns 30687, 30817 and 30599 the system is self-generating. All S/Ns except 30687, 30817 and 30599 use DC power for internal regulation.

95.7.10 Measured Gas Temperature (MGT) Indicator (-17B Engines)

Engine measured gas temperature indicator (M23) registers power turbine inlet air temperature received from bayonet type thermocouples mounted between the gas producer turbine and the power turbine. The temperature indications are in degrees Celsius.

95.7.11 Exhaust Gas Temperature (EGT) Indicator (-17A Engines)

Engine exhaust gas temperature indicator (M23) registers exhaust gas air temperature received from bayonet type thermocouples mounted at the output of the power turbine. The temperature indications are in degrees Celsius.

• COPYRIGHT © 2023 BY EAGLE COPTERS MAINTENANCE LTD •
THIS DOCUMENT IS PRIVATE AND CONFIDENTIAL AND IS SUPPLIED ON THE EXPRESS CONDITION THAT IT IS NOT TO BE USED FOR ANY PURPOSE OR COPIED OR COMMUNICATED TO ANY OTHER PERSON WITHOUT WRITTEN PERMISSION FROM EAGLE COPTERS MAINTENANCE LTD.

CHAPTER 95 – INSTRUMENT SYSTEM (95-00-00)

95.8 MISCELLANEOUS INSTRUMENTS

95.8.1 Miscellaneous Instruments

Miscellaneous instruments consist of clocks, AC and DC voltmeter, loadmeter, free air temperature indicator and engine hourmeter.

95.8.2 Clock

Clocks (pilot M29 and copilot M40) are LED 3 in 1 display clocks with a back-up battery. Each clock can display local or GMT time, flight time or elapsed time by means of the lower left toggle switch. The clock is dimmable using the upper right toggle switch. The lower right toggle switch starts, stops and resets the elapsed time or flight time. Time adjustment is made via the upper left toggle switch.

For aircraft with TBN-212-002 installed, the digital clocks are capable of displaying local time, universal time, flight timer, timer, voltage, and temperature, which can be toggled via the mode button. Additionally, the digital clocks are equipped with USB charging.

95.8.3 AC and DC Dual Voltmeter

For S/Ns 30687, 30817 and 30599 the AC and DC voltmeter (M21) monitors and simultaneously indicates AC and DC buss voltage. The voltmeter indicates voltage on 115 VAC and 28 VDC busses. The dual voltmeter does not control the power source and is used as a component of both DC and AC power systems. In all S/Ns except 30687, 30817 and 30599 a newer style indication eliminates the AC indication and combines the DC voltage indication with a loadmeter.

95.8.4 Loadmeter

For S/Ns 30687, 30817 and 30599 the loadmeter indicator (M13) indicates the load on the generator, in percent, by monitoring current at the generator shunt. In all S/Ns except 30687, 30817 and 30599 a newer style indication combines the DC voltage indication with a loadmeter.

95.8.5 Free Air Temperature Indicator

The bi-metallic probe-type free air temperature indicator is mounted at the top of the right windshield just to the right of the center post. The probe portion is exposed to outside temperatures through the windshield and is protected by a sunshield. The indicator provides a direct reading of outside air temperature in degrees Celsius.

95.8.6 Removal – Free Air Temperature Indicator

95.8.6.1 Unscrew and remove the sunshield, dished washer and one case washer from outside the windshield.

95.8.6.2 Remove indicator and other case washer from inside the windshield.

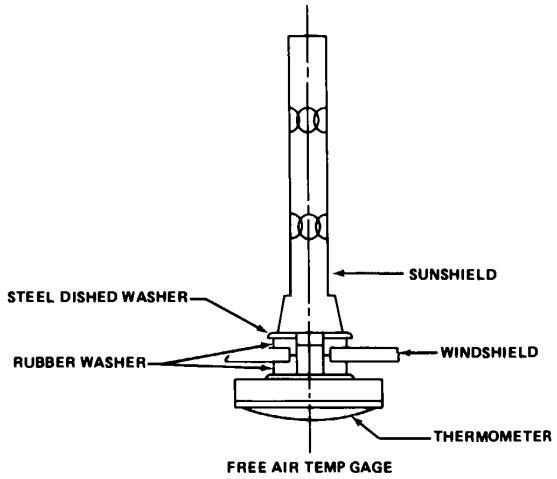

Figure 95-5. Free Air Temperature Indicator

95.8.7 Installation – Free Air Temperature Indicator

95.8.7.1 Place rubber washer over probe of thermometer with flat side of washer next to indicator case. Insert probe through mounting hole from inside the windshield.

95.8.7.2 Place rubber washer, flat side out, on probe outside windshield. Seat washer shoulders inside mounting hole. Install steel dished washer,

• COPYRIGHT © 2023 BY EAGLE COPTERS MAINTENANCE LTD •
THIS DOCUMENT IS PRIVATE AND CONFIDENTIAL AND IS SUPPLIED ON THE EXPRESS CONDITION THAT IT IS NOT TO BE USED FOR ANY PURPOSE OR COPIED OR COMMUNICATED TO ANY OTHER PERSON WITHOUT WRITTEN PERMISSION FROM EAGLE COPTERS MAINTENANCE LTD.

with outside edge curving toward windshield. Position temperature indicator scale correctly.

95.8.7.3 Place sunshield over probe and tighten securely.

95.8.8 Engine Hourmeter

Engine hourmeter (M26) is mounted on the right side of the pedestal near the floor. Hourmeter clock mechanism is calibrated in hours and registers engine operating hours under flight power.

For aircraft with TBN-212-001 installed, an additional hourmeter is installed in the centre pedestal on the copilot's side. The hour meter is calibrated in hours and registers engine operating hours under flight power.

• COPYRIGHT © 2023 BY EAGLE COPTERS MAINTENANCE LTD •
THIS DOCUMENT IS PRIVATE AND CONFIDENTIAL AND IS SUPPLIED ON THE EXPRESS CONDITION THAT IT IS NOT TO BE USED FOR ANY PURPOSE OR COPIED OR COMMUNICATED TO ANY OTHER PERSON WITHOUT WRITTEN PERMISSION FROM EAGLE COPTERS MAINTENANCE LTD.

CHAPTER 96 – ELECTRICAL SYSTEM (96-00-00)

CHAPTER 96
ELECTRICAL SYSTEM
(96-00-00)

• COPYRIGHT © 2023 BY EAGLE COPTERS MAINTENANCE LTD •
THIS DOCUMENT IS PRIVATE AND CONFIDENTIAL AND IS SUPPLIED ON THE EXPRESS CONDITION THAT IT IS NOT TO BE USED FOR ANY PURPOSE OR COPIED OR COMMUNICATED TO ANY OTHER PERSON WITHOUT WRITTEN PERMISSION FROM EAGLE COPTERS MAINTENANCE LTD.

Revision: **9**
Date: 23.02.10

CHAPTER 96 – ELECTRICAL SYSTEM (96-00-00)

TABLE OF CONTENTS

96.1 ELECTRICAL SYSTEM....9
96.1.1 Electrical Systems....9
96.1.2 Troubleshooting – Electrical Systems....9
96.1.3 Effectivity....9
96.1.4 Equipment Reference Designator, Nomenclature, and Location....9
96.1.5 Primary and Secondary Electrical Power Analysis....22
96.1.6 Power Source Component Data....22
96.1.7 Summary of System Analysis....23
96.1.8 Electrical Safety and Hazards....23
96.1.9 Safety Practices- General....23
96.1.10 Standard Practices - Electrical Maintenance or Repairs....24
96.1.11 Standard Practices - Electrical Work in Confined Spaces....24
96.1.12 Standard Practices - After Electrical Maintenance or Repairs....24
96.1.13 Miscellaneous Electrical Tools....25
96.1.14 Operational Checks - Electrical Systems....25
96.1.15 Troubleshooting - Electrical Systems....25
96.1.16 Miscellaneous Electrical Components - Maintenance Practices....25
96.1.17 Miscellaneous Electrical Components - Removal....26
96.1.18 Miscellaneous Electrical Components - Cleaning....26
96.1.19 Miscellaneous Electrical Components - Inspection....26
96.1.20 Miscellaneous Electrical Components - Repair....29
96.1.21 Miscellaneous Electrical Components - Installation....29
96.2 CONTROL PANELS - ELECTRICAL....29
96.2.1 Removal – Control Panels....29
96.2.2 Inspection – Control Panels....29
96.2.3 Installation – Control Panels....29
96.2.4 Circuit Breakers....29
96.2.5 Removal – Circuit Breakers....30
96.2.6 Inspection – Circuit Breakers....30
96.2.7 Repair/Replacement – Circuit Breakers....30
96.2.8 Installation – Circuit Breakers....30
96.2.7 Semiconductor Devices....30
96.2.8 Semiconductor Devices - Maintenance Practices....30
96.2.9 Track Mounted Relays....31
96.2.10 Track Mounted Relays - Removal....31
96.2.11 Track Mounted Relays - Cleaning....31
96.2.12 Track Mounted Relays - Inspection....31
96.2.13 Track Mounted Relays - Installation....31
96.3 DC POWER SYSTEMS....31
96.3.1 DC Power Systems....31
96.3.2 Battery....31
96.3.3 Battery Servicing....32
96.3.4 Removal – Battery....32
96.3.5 Inspection – Battery....32
96.3.6 Installation – Battery....32
96.3.7 Operational Check – Battery System....33
96.3.8 External Power....33
96.3.9 Removal – External Power Receptacle....34

• COPYRIGHT © 2023 BY EAGLE COPTERS MAINTENANCE LTD •
THIS DOCUMENT IS PRIVATE AND CONFIDENTIAL AND IS SUPPLIED ON THE EXPRESS CONDITION THAT IT IS NOT TO BE USED FOR ANY PURPOSE OR COPIED OR COMMUNICATED TO ANY OTHER PERSON WITHOUT WRITTEN PERMISSION FROM EAGLE COPTERS MAINTENANCE LTD.

CHAPTER 96 – ELECTRICAL SYSTEM (96-00-00)

96.3.10 Installation – External Power Receptacle 34
96.3.11 Operational Check – External Power Receptacle 34
96.3.12 Starter/Generator 34
96.3.13 Removal – Starter/Generator 34
96.3.14 Installation – Starter/Generator 35
96.3.15 Replacement – Starter/Generator Brushes 35
96.3.16 Operational Check – Starter/Generator 35
96.3.17 Operational Check – Voltage Control Adjustment 36
96.3.18 Operational Check – Non-Essential Buss 37
96.3.19 Power Diode Functional Checkout Procedure 38
96.3.20 Starter and Igniter 41
96.3.21 Operational Check – Starter and Igniter Systems 41
96.3.22 Starter Circuitry 41
96.3.23 Engine Ignition Unit 41
96.4 AC POWER SYSTEM 42
96.4.1 AC Power System 42
96.4.2 Inverter 42
96.4.3 Removal – Inverters PS1 or PS7 42
96.4.4 Inspection – Inverters PS1 or PS7 42
96.4.5 Installation – Inverters PS1 or PS7 43
96.4.6 Operational Check – Inverter System and Inverter Caution Lights 43
96.5.1 AC Powered Indicator Systems 43
96.5.2 Torque Indicator 44
96.5.3 Operational Check and Calibration – Torque Indicator 44
96.5.4 Engine Oil Pressure Indicator 46
96.5.5 Operational Check – Engine Oil Pressure Indicator 46
96.5.6 Transmission Oil Pressure Indicator 46
96.5.7 Operational Check – Transmission Oil Pressure Indicator 46
96.5.8 Hydraulic Pressure Indicator 47
96.5.9 Operational Check – Hydraulic Pressure Indicator 47
96.5.10 Fuel Pressure Indicator 47
96.5.11 Operational Check – Fuel Pressure Indicator 47
96.5.12 Fuel Quantity Indicator 47
96.5.13 Insulation Resistance Test – Tank Units and System Wiring Installation 48
96.5.14 Calibration- Fuel Quantity Indicator System (Preferred Method - No Fuel in Tank) - Calibration 48
96.5.15 Calibration- Fuel Quantity Indicator System (Alternate Method - Wet Tanks) 48
96.5.16 Dual Tachometer Indicator 50
96.5.17 Operational Check – Dual Tachometer Indicator System (Rotor Rpm, Power Turbine Rpm 50
96.5.18 Gas Producer Tachometer Indicator 50
96.5.19 Operational Check – Gas Producer Tachometer Indicator 50
96.6 DC POWERED INDICATOR SYSTEMS 51
96.6.1 DC Powered Indicator Systems 51
96.6.2 Engine Oil Temperature Indicator 51
96.6.3 Operational Check – Engine Oil Temperature Indicator 51
96.6.4 Transmission Oil Temperature Indicator 51
96.6.5 Operational Check – Transmission Oil Temperature Indicator 51
96.6.6 Engine Hourmeter 51
96.6.7 Operational Check – Engine Hourmeter 51
96.6.8 Turn and Bank Indicator 52
96.6.9 Operational Test – Turn and Bank Indicator 52

• COPYRIGHT © 2023 BY EAGLE COPTERS MAINTENANCE LTD •
THIS DOCUMENT IS PRIVATE AND CONFIDENTIAL AND IS SUPPLIED ON THE EXPRESS CONDITION THAT IT IS NOT TO BE USED FOR ANY PURPOSE OR COPIED OR COMMUNICATED TO ANY OTHER PERSON WITHOUT WRITTEN PERMISSION FROM EAGLE COPTERS MAINTENANCE LTD.

CHAPTER 96 – ELECTRICAL SYSTEM (96-00-00)

96.6.10 Exhaust Gas Temperature Indicator (-17A Engines) 52
96.6.11A Operational Test- Exhaust Gas Temperature Indicator (Analog Indicator) 52
96.6.11B Operational Test- Exhaust Gas Temperature Indicator (Analog/Digital Indicator) 53
96.6.12 Measured Gas Temperature Indicator (-17B Engines) 53
96.6.13A Operational Test- Measured Gas Temperature Indicator (Analog Indicator) 53
96.6.13B Operational Test- Measured Gas Temperature Indicator (Analog/Digital Indicator) 54
96.6.14 Hydraulic Oil Temperature Indicators 54
96.6.15 Operational Check – Hydraulic Temperature Indicators 55
96.6.16 Attitude Indicator 55
96.6.17 Operational Check – Attitude Indicator 55
96.6.18 Gyro Directional Indicator 55
96.6.19 Operational Check – Gyro Directional Indicator 55
96.6.20 DC Torque Indicator 56
96.6.21 Operational Check and Calibration – DC Torque Indicator 56
96.6.22 DC Engine Oil Pressure Indicator 57
96.6.23 Operational Check – DC Engine Oil Pressure Indicator 57
96.6.24 DC Transmission Oil Pressure Indicator 57
96.6.25 Operational Check – DC Transmission Oil Pressure Indicator 58
96.6.26 DC Hydraulic Pressure Indicator 58
96.6.27 Operational Check – DC Hydraulic Pressure Indicator 58
96.6.28 Fuel Pressure Indicator 59
96.6.29 Operational Check – DC Fuel Pressure Indicator 59
96.6.30 DC Dual Tachometer Indicator 59
96.6.31 Operational Check – DC Dual Tachometer Indicator 59
96.6.32 DC Gas Producer Tachometer Indicator 60
96.6.33 Operational Check – DC Gas Producer Tachometer Indicator 60
96.7 INTERIOR LIGHTING SYSTEM 60
96.7.1 Interior Lighting Systems 60
96.7.2 Cockpit Lights 61
96.7.3 Operational Check – Cockpit Lights 61
96.7.4 Dome Lights 61
96.7.5 Operational Check – Dome Lights 61
96.7.6 Pilot And Copilot Instrument Panel Lights 61
96.7.7 Operational Check – Pilot and Copilot Instrument Panel Lights 61
96.7.8 Engine Instrument Panel Lights 62
96.7.9 Operational Check – Engine Instrument Panel Lights 62
96.7.10 Instrument Secondary Lights 62
96.7.11 Operational Check – Instrument Secondary Lights 62
96.7.12 Pedestal Lights 62
96.7.13 Operational Check – Pedestal Lights 63
96.7.14 Overhead Console Lights 63
96.7.15 Operational Check – Overhead Console Lights 63
96.7.16 Cargo Compartment Lights 63
96.7.17 Operational Check – Cargo Compartment Lights 63
96.8 CAUTION AND WARNING SYSTEM 63
96.8.1 Caution and Warning System 63
96.8.2 Operation – Caution and Warning System 64
96.8.3 Operational Test – Caution Panel Light 64
96.8.4 Operational Check – DC Generator Caution Light 66
96.8.5 Operational Check – Engine Oil Pressure Caution Light 66

• COPYRIGHT © 2023 BY EAGLE COPTERS MAINTENANCE LTD •
THIS DOCUMENT IS PRIVATE AND CONFIDENTIAL AND IS SUPPLIED ON THE EXPRESS CONDITION THAT IT IS NOT TO BE USED FOR ANY PURPOSE OR COPIED OR COMMUNICATED TO ANY OTHER PERSON WITHOUT WRITTEN PERMISSION FROM EAGLE COPTERS MAINTENANCE LTD.

CHAPTER 96 – ELECTRICAL SYSTEM (96-00-00)

96.8.6 Operational Check – Engine Oil Filter Caution Light 66
96.8.7 Operational Check – Engine Fuel Pump Caution Light 67
96.8.8 Operational Check – Engine Fuel Valve Caution Light 67
96.8.9 Operational Check – Fuel Boost Caution Light 67
96.8.10 Operational Check – Fuel Filter Caution Light 67
96.8.11 Operational Check – Fuel Low Caution Light 68
96.8.12 Operational Check – Governor Manual Control Caution Light 69
96.8.13 Operational Check – Engine Chip Detector Caution Light 69
96.8.14 Operational Check – #1 Hydraulic Caution Light System 69
96.8.15 Operational Check – #2 Hydraulic Caution Light System 69
96.8.16 Operational Check – Transmission Oil Pressure Caution Light 69
96.8.17 Operational Check – Inverter No.1 Caution Light System 69
96.8.18 Operational Check – Inverter No.2 Caution Light System 69
96.8.19 Operational Check – Transmission Chip Detector Caution Light System 70
96.8.20 Operational Check – Transmission Oil Temperature Caution Light 70
96.8.21 Operational Check – Intermediate Gearbox Chip Detector Caution Light 70
96.8.22 Operational Check – Tail Rotor Gearbox Chip Detector Caution Light 71
96.8.23 Operational Check – External Power Caution Light 71
96.8.24 Operational Check – Passenger Door Lock Caution Light 71
96.8.25 Operational Check – Cargo Door Lock Caution Light 71
96.8.26 Adjustment Procedure – Passenger Door Lock And Cargo Door Lock Switches 71
96.8.27 Operational Check – Battery Caution Light System 72
96.8.28 Operational Check – Heater Overheat Caution Light 72
96.8.29 Operational Check – Heater Air Line Caution Light 72
96.8.30 Caution Panel Light 72
96.8.31 Operational Check – Caution Panel Light 72
96.8.32 RPM Limit Warning (Lights and Audio) 73
96.8.33 Operational Check – RPM Limit Warning System 73
96.8.34 Adjustment Procedure – RPM Limit Warning System (Low RPM Warning) 74
96.8.35 Adjustment Procedure – RPM Limit Warning System (High Rotor RPM Warning) 75
96.8.36 Fire Detection Warning System 75
96.8.37 Operational Check – Engine Fire Detection System 76
96.8.38 Fire Detection Warning – Cargo Compartment 76
96.8.39 Operational Check – Cargo Fire Detection Warning System 76
96.8.40 Hydraulic Filter Clogged Warning 77
96.8.41 Operational Check – Hydraulic Filter Clogged Warning 77
96.9 EXTERIOR LIGHTING SYSTEMS 77
96.9.1 Exterior Lighting Systems 77
96.9.2 Utility Lights 77
96.9.3 Operational Check – Utility Light System. 78
96.9.4 Position Lights 78
96.9.5 Operational Check – Position Light System 78
96.9.6 Anti-collision Lights 78
96.9.7 Operational Check – Anti-Collision Light System 78
96.9.8 Searchlight 78
96.9.9 Operational Check – Searchlight System 79
96.9.10 Landing Light 79
96.9.11 Operational Check – Landing Light System 79
96.10 ENGINE CONTROLS AND ACCESSORIES SYSTEMS 80
96.10.1 Engine Controls and Accessories Systems 80

• COPYRIGHT © 2023 BY EAGLE COPTERS MAINTENANCE LTD •
THIS DOCUMENT IS PRIVATE AND CONFIDENTIAL AND IS SUPPLIED ON THE EXPRESS CONDITION THAT IT IS NOT TO BE USED FOR ANY PURPOSE OR COPIED OR COMMUNICATED TO ANY OTHER PERSON WITHOUT WRITTEN PERMISSION FROM EAGLE COPTERS MAINTENANCE LTD.

CHAPTER 96 – ELECTRICAL SYSTEM (96-00-00)

96.10.2 Fuel Boost Pumps 80
96.10.3 Operational Check – Fuel Boost Pumps System 80
96.10.4 Fuel Shutoff Valve 80
96.10.5 Operational Check – Fuel Shutoff Valve System 80
96.10.6 Engine Fuel Control Valve 81
96.10.7 Operational Check – Engine Fuel Control Valve 81
96.10.8 Governor Rpm Actuator 81
96.10.9 Operational Check – Governor Rpm Actuator System 81
96.10.10 Sump Drain Valves 81
96.10.11 Operational Check – Fuel Sump Drain Valves 81
96.10.12 Idle Stop Release Solenoid 82
96.10.13 Operational Check – Idle Stop Release Solenoid 82
96.10.14 Engine Anti-Icing 82
96.10.15 Operational Check – Engine Anti-Icing System 83
96.10.16 Start Fuel Valve 83
96.10.17 Operational Check – Start Fuel Solenoid Valve 83
96.11 FLIGHT CONTROL SYSTEMS 83
96.11.1 Flight Control System 83
96.11.2 Force Trim 83
96.11.3 Operational Check – Force Trim 84
96.11.4 Hydraulic Bypass 84
96.11.5 Operational Check – Hydraulic Bypass 84
96.12 HEATING SYSTEMS 85
96.12.1 Heating Systems 85
96.12.2 Pitot Tube Heaters 85
96.12.3 Operational Check – Pitot Tube Heaters 85
96.12.4 Cabin Heater 85
96.12.5 Operational Check – Cabin Heater 86
96.12.6 Cabin Temperature Control 87
96.12.7 Rigging – Cabin Temperature Control 87
96.12.8 Operational Check – Cabin Temperature Control 87
96.12.9 Bleed Air Priority Switch 88
96.12.10 Rigging – Bleed Air Priority Switch 88
96.12.11 Operational Check – Bleed Air Priority Switch 89
96.12.12 Vent Blower 89
96.12.13 Operational Check – Vent Blower 89
96.13 MISCELLANEOUS ELECTRICAL SYSTEMS 90
96.13.1 Windshield Wipers 90
96.13.2 Operational Check – Windshield Wiper 90
96.13.3 Engine Fire Extinguisher System 90
96.13.4 Operational Check – Fire Extinguisher Discharge Circuit 91
96.13.5 Cargo Release System 91

Appendix A 90

• COPYRIGHT © 2023 BY EAGLE COPTERS MAINTENANCE LTD •
THIS DOCUMENT IS PRIVATE AND CONFIDENTIAL AND IS SUPPLIED ON THE EXPRESS CONDITION THAT IT IS NOT TO BE USED FOR ANY PURPOSE OR COPIED OR COMMUNICATED TO ANY OTHER PERSON WITHOUT WRITTEN PERMISSION FROM EAGLE COPTERS MAINTENANCE LTD.

CHAPTER 96 – ELECTRICAL SYSTEM (96-00-00)

LIST OF FIGURES

Figure 96-1. Track Mounted Relay - Removal/Installation (Typical) 28
Figure 96-2. Starter/Generator Brush Wear 35
Figure 96-3. Voltage Control Adjustment 38
Figure 96-4. Power Diode Electrical Bus Wiring Schematic 40
Figure 96-5. Pressure Tester 45
Figure 96-6. Test Setup for Fuel Quantity Indicator Calibration, Dry Tanks. 49
Figure 96-7. RPM Limit Detector 75
Figure 96-8. Anti-icing System Components 82
Figure 96-9. Cabin Temperature Control 88
Figure 96-10. Bleed Air Priority Switch 90

LIST OF TABLES

Table 96-1. Equipment Reference Designator, Nomenclature, and Location 10
Table 96-2. Power System Components 22
Table 96-3. System Analysis 23
Table 96-4. Miscellaneous Electrical Component Inspections - Electrical Wire Interconnection System (EWIS) 27
Table 96-5. Max Seasonal Temperature 37
Table 96-6. Power Diode Functional Checkout Procedures. 39
Table 96-7. Torquemeter Alignment Chart. 45
Table 96-8. Master Caution Lights 64

• COPYRIGHT © 2023 BY EAGLE COPTERS MAINTENANCE LTD •
THIS DOCUMENT IS PRIVATE AND CONFIDENTIAL AND IS SUPPLIED ON THE EXPRESS CONDITION THAT IT IS NOT TO BE USED FOR ANY PURPOSE OR COPIED OR COMMUNICATED TO ANY OTHER PERSON WITHOUT WRITTEN PERMISSION FROM EAGLE COPTERS MAINTENANCE LTD.

CHAPTER 96 – ELECTRICAL SYSTEM (96-00-00)

CONSUMABLE MATERIALS LIST

The following consumable materials are required to perform the maintenance procedures within this chapter.

ITEM No.	NOMENCLATURE	GAGE/FSCM/ SOURCE
C-237	Varnish, Alkaline Resistant, TT-V-119	Commercial
C-489	Boric Acid Solution, O-C-265	Commercial

• COPYRIGHT © 2023 BY EAGLE COPTERS MAINTENANCE LTD •
THIS DOCUMENT IS PRIVATE AND CONFIDENTIAL AND IS SUPPLIED ON THE EXPRESS CONDITION THAT IT IS NOT TO BE USED FOR ANY PURPOSE OR COPIED OR COMMUNICATED TO ANY OTHER PERSON WITHOUT WRITTEN PERMISSION FROM EAGLE COPTERS MAINTENANCE LTD.

CHAPTER 96 – ELECTRICAL SYSTEM (96-00-00)

96.1 ELECTRICAL SYSTEM

96.1.1 Electrical Systems

Maintenance of electrical circuitry, electrical equipment, and electrical components with the helicopter is presented in the following systems text.

Control Panels for AC and DC electrical systems are located on the overhead console. Control relays, power relays, voltage regulators, and other equipment required to control, regulate, and to effect power transfer and malfunction monitoring are located in respective compartments. For equipment location, see Drawing D212-725-8 or D212-725-8-G2 as applicable in Appendix A.

NOTE
For location of an item code cited in the text of the manual and wiring diagrams, refer to the Equipment Designator, Nomenclature, and Location Table 96-1.

Throughout this chapter, when performing operational checks, external power should be used whenever possible. Circuit breakers and switches are considered to be in their normal position. Perform operational checks after equipment is replaced or airframe wiring is repaired or replaced.

96.1.2 Troubleshooting – Electrical Systems

The maintenance procedures are recommended as a guide to locate malfunctions in the electrical systems. Following obvious and/or easiest to check should be accomplished first. The following need not be performed in order listed:

96.1.2.1 Progressively check that electrical power is supplied from power source to electrical unit. Refer to applicable wiring diagrams in Chapter 98.

96.1.2.2 Verify that switches, relays, and diodes are functioning properly.

96.1.2.3 Check that wiring, connectors, and connections are in normal condition.

96.1.2.4 Verify electrical unit is not defective.

96.1.3 Effectivity

Effectivity for illustrations and text is indicated where applicable. When effectivity is not indicated, all helicopters are covered.

96.1.4 Equipment Reference Designator, Nomenclature, and Location

Table 96-1 can be used as an aid in troubleshooting by giving general vicinity of the item to maintenance personnel. For example, if the Forward Fuel Interconnect Valve, B17, is suspected to be defective, locate item B17 in the REF DES Column of Table 96-1 to determine that this item is located in “Fuel Cells, lower, forward of”.

• COPYRIGHT © 2023 BY EAGLE COPTERS MAINTENANCE LTD •
THIS DOCUMENT IS PRIVATE AND CONFIDENTIAL AND IS SUPPLIED ON THE EXPRESS CONDITION THAT IT IS NOT TO BE USED FOR ANY PURPOSE OR COPIED OR COMMUNICATED TO ANY OTHER PERSON WITHOUT WRITTEN PERMISSION FROM EAGLE COPTERS MAINTENANCE LTD.

CHAPTER 96 – ELECTRICAL SYSTEM (96-00-00)

Table 96-1. Equipment Reference Designator, Nomenclature, and Location

REF DES	NOMENCLATURE	LOCATION
A		
A1	Panel	Overhead Console, left
A2	Panel	Overhead Console, right
A3	Panel, Engine Fuel and Control	Pedestal, forward
A5	Panel, Master Caution	Instrument Panel
A7	Panel, Circuit Breaker	Overhead Console, left
A8	Panel, Circuit Breaker	Overhead Console, right
A9	Panel, Pilot Collective Stick	Collective Stick, Pilot
A10	Panel, Miscellaneous	Pedestal, forward
A11	Panel	Collective Stick, Copilot
A13, A14	Panel, Resistor	Cabin Roof, forward
A15	Panel, Engine Instrument	Instrument Panel
A18	Panel, Compass Identification	Instrument Panel
A19	Panel	Cyclic Stick, Pilot
A20	Panel	Cyclic Stick, Copilot
A23	Panel, Auxiliary Circuit Breaker	Overhead Console
B		
B1	Transmitter, Torque Pressure	Engine
B3	Transmitter, Engine Oil Pressure	Engine
B5	Transmitter, Fuel Pressure	Engine
B7	Transmitter, Transmission Oil Pressure	Transmission
B8	Motor, Governor RPM Actuator	Engine
B9	Fuel Shutoff Valve	Pylon Compartment, aft
B11	Motor, Fuel Boost Pump	Fuel Cell, left
B12	Motor, Fuel Boost Pump	Fuel Cell, right
B13	Motor, Windshield Wiper, Copilot	Cabin Roof, left forward
B14	Motor, Windshield Wiper, Pilot	Cabin Roof, right forward
B17	Motor, Fuel Interconnect Valve, Forward	Fuel Cells, lower forward of
B18	Motor, Fuel Interconnect Valve, Aft	Fuel Cells, lower between
B20	Motor Vent Blower	Nose Compartment, upper right
B21	Motor Vent Blower	Nose Compartment, upper left
B23	Transmitter, # 2 Hydraulic Pressure	Pylon Compartment
B24	Transmitter, # 1 Hydraulic Pressure	Pylon Compartment
B27	Motor, Inverter Blower	Nose Compartment
B30	Motor, Cabin Temperature Positioning	Cabin, lower, Station 180
B44	Transmitter, Torque Pressure	Engine
BT1	Battery	Nose Compartment, forward
C		
CP1	Coupler, Fuel Quantity	Cabin Floor, Station 63, center

• COPYRIGHT © 2023 BY EAGLE COPTERS MAINTENANCE LTD •
THIS DOCUMENT IS PRIVATE AND CONFIDENTIAL AND IS SUPPLIED ON THE EXPRESS CONDITION THAT IT IS NOT TO BE USED FOR ANY PURPOSE OR COPIED OR COMMUNICATED TO ANY OTHER PERSON WITHOUT WRITTEN PERMISSION FROM EAGLE COPTERS MAINTENANCE LTD.

Table 96-1. Equipment Reference Designator, Nomenclature, and Location

REF DES	NOMENCLATURE	LOCATION
CP2	Tee	Cabin Floor, Station 74, left
CP3, CP4	Tee	Cabin Roof, Station 159, left
CR9	Diode, External Power Relay	Nose Compartment, lower
CR18	Diode, Audio RPM	Pedestal, A10
CR30, CR31	Diode, Main DC Buss # 1	Overhead Console, left
CR32, CR33	Diode, Main DC Buss # 2	Overhead Console, right
CR39	Diode, Non-essential Buss Relay	Cabin Roof, Station 74, left
CR45	Diode, Idle Stop Solenoid	Aft Hellhole
CR49	Diodes, Caution Light Dim	Nose Compartment Shelf, TB50
CR50	Diodes, Caution Light Dim	Nose Compartment Shelf, TB50
CR51	Diodes, Caution Light Dim	Nose Compartment Shelf, TB50
CR52	Diodes, Caution Light Dim	Nose Compartment Shelf, TB50
CR72	Diode, Start Relay	Cabin Roof, Station 142, left
CR75	Diode, Hydraulic System # 2	Pedestal, A10
CR76	Diode, Hydraulic System # 1	Pedestal, A10
CR77	Diode, Heater System Select Switch	Overhead Console, S189
CR78	Diode, Cargo Release	Pylon Compartment, K17
CR79	Diode, Generator Relay	Cabin Roof, Station 82, left
CR82	Diode, Cargo Release Relay	Pylon Compartment, K17
CR85	Diode, AC Control Relay # 2	Cabin Roof, Station 68, left
CR87	Diode, Governor Switch	Pedestal, A3
CR95	Diode, Fuel Valve Caution Light	Pedestal, A3
CR79	Diode, Generator Relay	Cabin Roof, Station 82, left
CR97	Diode, Transmission Chip	Pedestal, Right, TB80
CR98	Diode, Transmission Chip	Pedestal, Right, TB80
CR99	Diode, Transmission Chip	Pedestal, Right, TB80
CR101	Diodes, Caution Light Dim	Instrument Panel, 27TB2
CR102	Diodes, Caution Light Dim	Instrument Panel, 27TB2
CR103	Diodes, Caution Light Dim	Instrument Panel, 27TB2
CR104	Diodes, Caution Light Dim	Instrument Panel, 27TB2
D		
DS5	Light, Cargo Release Armed, Copilot	Instrument Panel, right
DS7	Light, Anti-collision, Lower	Fuselage, underneath
DS8	Light, Anti-collision, Upper	Pylon, top
DS9	Utility Light, Copilot	Cabin Roof, forward
DS10	Utility Light, Pilot	Cabin Roof, forward
DS11	Light, Dome	Cabin Roof, center & Station 144 RH/LH
DS12	Light, Search	Fuselage, forward, station 40, underneath
DS13	Light, Landing	Fuselage, forward, station 84, underneath
DS14	Light, Secondary	Instrument Panel
DS15	Light, Left Position	Fuselage, station 104 top, left
DS16	Light, Right Position	Fuselage, station 104 to, right
DS17	Light, Tail	Tail Cone
DS18	Light, Passenger Warning	Cabin Roof
DS20	Light, Cargo	Cargo Compartment

• COPYRIGHT © 2023 BY EAGLE COPTERS MAINTENANCE LTD •
THIS DOCUMENT IS PRIVATE AND CONFIDENTIAL AND IS SUPPLIED ON THE EXPRESS CONDITION THAT IT IS NOT TO BE USED FOR ANY PURPOSE OR COPIED OR COMMUNICATED TO ANY OTHER PERSON WITHOUT WRITTEN PERMISSION FROM EAGLE COPTERS MAINTENANCE LTD.

Table 96-1. Equipment Reference Designator, Nomenclature, and Location

REF DES	NOMENCLATURE	LOCATION
DS21	Light, Cargo Fire, Copilot	Instrument Panel, right
DS26	Light, Heater Outlet Valve	Door Post, right crew
DS28	Indicator, Hydraulic Filter Clog	Nose Compartment, right
DS29	Light, Left Utility	Fuselage, station 102, lower left
DS30	Light, Right Utility	Fuselage, station 102, lower right
DS31	Light, Engine RPM, Copilot	Instrument Panel, right
DS32	Light, Engine RPM, Pilot	Instrument Panel, left
DS37	Light, Master Caution, Copilot	Instrument Panel, right
DS38	Light, Master Caution, Pilot	Instrument Panel, left
DS39	Light, Rotor RPM, Copilot	Instrument Panel, right
DS40	Light, Rotor RPM, Pilot	Instrument Panel, left
DS50	Indicator, Transmission Chip, Sump	Pedestal, right
DS51	Indicator, Transmission Chip, Planetary	Pedestal, right
DS52	Indicator, Transmission Chip, Upper Mast	Pedestal, right
DS101	Light, Cargo Fire, Pilot	Instrument Panel, right
DS102	Light, Cargo Release Armed, Pilot	Instrument Panel, left
DS103	Light, Engine Fire	Vertical Reference Door
DS104	Light, Master Caution	Vertical Reference Door
DS105	Light, Longline Armed	Vertical Reference Door
DS106	Light, Heater ON/OFF	Instrument Panel, center
E		
E1	Detector, Chip, Transmission	Transmission
E3	Detector, Chip, Engine	Engine
E7	Detector, Chip, 42º Gearbox	Intermediate Gearbox
E8	Detector, Chip, 90º Gearbox	Gearbox, Tail Rotor
E16	Detector, Chip, Transmission, Planetary	Transmission
E17	Detector, Chip, Transmission, Upper Mast	Transmission
ECM TB1	Matrix Blocks, Audio	Inside Pedestal
G		
G1	Starter/Generator	Engine
G3	Generator, Tachometer, Gas Producer	Engine
G5	Generator, Tachometer, Power Turbine	Engine
G7	Generator, Tachometer, Rotor	Transmission
H		
H1	Heater, Pitot, Pilot	Nose Compartment, forward
H2	Heater, Pitot, Copilot	Nose Compartment, forward
H3	Heater, Static Port, Pilot	Fuselage, forward, left
H4	Heater, Static Port, Pilot	Fuselage, forward, right
H5	Heater, Static Port, Copilot	Fuselage, forward, left
H6	Heater, Static Port, Copilot	Fuselage, forward, right
J		

• COPYRIGHT © 2023 BY EAGLE COPTERS MAINTENANCE LTD •
THIS DOCUMENT IS PRIVATE AND CONFIDENTIAL AND IS SUPPLIED ON THE EXPRESS CONDITION THAT IT IS NOT TO BE USED FOR ANY PURPOSE OR COPIED OR COMMUNICATED TO ANY OTHER PERSON WITHOUT WRITTEN PERMISSION FROM EAGLE COPTERS MAINTENANCE LTD.

Table 96-1. Equipment Reference Designator, Nomenclature, and Location

REF DES	NOMENCLATURE	LOCATION
J3	Connector, External Power	Nose Compartment, forward
J56	Receptacle, 28VDC Auxiliary	Pedestal, left
K		
K1	Relay, External Power	Nose Compartment, lower right
K3	Relay, Starter/Generator	Cabin Roof, station 84, left
K5	Relay, Starter	Cabin Roof, station 146, left
K7	Relay, Starter Control	Nose Compartment, lower
K9	Relay, Battery Buss	Nose Compartment, lower
K11	Relay, AC Buss Control	Cabin Roof, station 70
K13	Relay, AC Voltage Sense # 1	Nose Compartment, lower
K14	Relay, AC Voltage Sense # 2	Nose Compartment, lower
K17	Relay, Cargo Hook Release	Forward Hellhole
K18	Relay, Heater	Cabin Roof
K30	Relay, Hourmeter	Pedestal, right
K33	Relay, Non-essential Buss Control	Nose Compartment
K39	Relay, Non-essential Buss	Cabin Roof, station 74, left
K52	Relay, Caution Panel Fail	Pedestal, right
L		
L1	Solenoid, Fuel Control Valve	Engine Compartment
L3	Solenoid, Hydraulic Bypass # 1	Pylon Compartment
L4	Solenoid, Hydraulic Bypass # 2	Pylon Compartment
L5	Solenoid, Idle Stop	Aft Hellhole
L7	Solenoid, Variable Mixing Valve	Heater Compartment
L8	Magnetic Brake, Antitorque	Cabin Floor, station 63, right
L9	Magnetic Brake, Fore & Aft	Cabin Floor, station 63, left
L10	Magnetic Brake, Lateral	Cabin Floor, station 23, left
L11	Solenoid, Door Post	Door Post, right
L12	Solenoid Valve, Right Sump Drain	Fuel Cell, right
L13	Solenoid Valve, Left Sump Drain	Fuel Cell, left
L16	Valve, Aft Outlet	Heater Compartment
L19	Valve, Winterization Kit	Heater Compartment
M		
M1	Indicator, Copilot Attitude	Instrument Panel
M2	Indicator, Pilot Attitude	Instrument Panel
M3	Indicator, Fuel Pressure	Instrument Panel
M5	Indicator, Engine Oil Temperature and Pressure	Instrument Panel
M11	Indicator, Copilot Dual Tachometer	Instrument Panel
M12	Indicator, Pilot Dual Tachometer	Instrument Panel
M13	Indicator, Loadmeter	Instrument Panel
M16	Indicator, Transmission Oil Temperature and Pressure	Instrument Panel
M17	Indicator, Gas Producer Tachometer	Instrument Panel

• COPYRIGHT © 2023 BY EAGLE COPTERS MAINTENANCE LTD •
THIS DOCUMENT IS PRIVATE AND CONFIDENTIAL AND IS SUPPLIED ON THE EXPRESS CONDITION THAT IT IS NOT TO BE USED FOR ANY PURPOSE OR COPIED OR COMMUNICATED TO ANY OTHER PERSON WITHOUT WRITTEN PERMISSION FROM EAGLE COPTERS MAINTENANCE LTD.

Table 96-1. Equipment Reference Designator, Nomenclature, and Location

REF DES	NOMENCLATURE	LOCATION
M19	Indicator, Copilot Torque	Instrument Panel
M20	Indicator, Pilot Torque	Instrument Panel
M21	Indicator, Dual Voltmeter	Instrument Panel
M23	Indicator, Measured Gas Temperature	Instrument Panel
M23	Indicator, Exhaust Gas Temperature	Instrument Panel
M25	Indicator, Fuel Quantity	Instrument Panel
M26	Hourmeter	Pedestal, right
M28	Indicator, Standby Compass	Above Windshield, right
M29	Indicator, Pilot Clock	Instrument Panel
M30	Indicator, Pilot Airspeed	Instrument Panel
M31	Indicator, Pilot Vertical Speed	Instrument Panel
M32	Indicator, Pilot Altimeter	Instrument Panel
M33	Indicator, Copilot Altimeter	Instrument Panel
M35	Indicator, Copilot Airspeed	Instrument Panel
M36	Indicator, # 1 Hydraulic	Instrument Panel
M37	Indicator, # 2 Hydraulic	Instrument Panel
M40	Indicator, Copilot Clock	Instrument Panel
P and/or J		
1	Connector, Pitot Heater	Nose Compartment, left
2	Connector, Pitot Heater	Nose Compartment, right
4	Connector, Batter	Nose Compartment
5	Connector, RPM limit Warning Box	Nose Compartment
8	Connector, AC voltage Sense # 2	Nose Compartment, lower
9	Connector, AC Voltage Sense # 1	Nose Compartment, lower
11	Connector, DC Control Panel	Nose Compartment, lower
12	Connector, Inverter # 2	Nose Compartment, lower
13	Connector, Inverter # 1	Nose Compartment, lower
14	Connector, Pilot Attitude Indicator	Instrument Panel
15	Connector, Copilot Attitude Indicator	Instrument Panel
17	Connector, Fuel Pressure Indicator	Instrument Panel
19	Connector, Engine Oil Temperature And Pressure Indicator	Instrument Panel
23	Connector, Gas Producer Indicator	Instrument Panel
26	Connector, Pilot Dual Tachometer Indicator	Instrument Panel
27	Connector, Copilot Dual Tachometer Indicator	Instrument Panel
28	Connector, Pilot Torque Indicator	Instrument Panel
29	Connector, Copilot Torque Indicator	Instrument Panel
30	Connector, Transmission Oil Temperature And Pressure Indicator	Instrument Panel
32	Connector, Fuel Quantity Indicator	Instrument Panel
33 & 33A	Connector, Instrument Panel Disconnect	Instrument Panel, forward left
34 & 34A	Connector, Instrument Panel Disconnect	Instrument Panel, forward right
35	Connector, Rotor Tachometer Generator	Pylon Compartment
36	Connector, Transmission Oil Pressure Switch	Pylon Compartment

• COPYRIGHT © 2023 BY EAGLE COPTERS MAINTENANCE LTD •
THIS DOCUMENT IS PRIVATE AND CONFIDENTIAL AND IS SUPPLIED ON THE EXPRESS CONDITION THAT IT IS NOT TO BE USED FOR ANY PURPOSE OR COPIED OR COMMUNICATED TO ANY OTHER PERSON WITHOUT WRITTEN PERMISSION FROM EAGLE COPTERS MAINTENANCE LTD.

Table 96-1. Equipment Reference Designator, Nomenclature, and Location

REF DES	NOMENCLATURE	LOCATION
37	Connector, Transmission Oil Temperature Bulb	Pylon Compartment
38	Connector, Miscellaneous Panel	Pedestal, A10
39	Connector, Transmission Oil Pressure Transmitter	Transmission
40	Connector, Fuel Quantity Selector	Instrument Panel
41	Connector, Transmission Disconnect	Pylon Compartment
42	Connector, Caution Panel	Instrument Panel
43	Connector, Caution Panel	Instrument Panel
44	Connector, Engine Control Panel	Pedestal, forward
45	Connector, Engine Control Panel	Pedestal, forward
46	Connector, Pilot Cyclic Stick	Cyclic Stick, Pilot
47	Connector, Copilot Cyclic Stick	Cyclic Stick, Copilot
48	Connector, Pilot Collective	Collective Stick, Pilot
49	Connector, Copilot Collective	Collective Stick, Copilot
50	Connector, Anti-collision Light	Fuselage, underneath
51	Connector, Copilot Windshield Wiper Motor	Cabin Roof, forward, left
52	Connector, Pilot Windshield Wiper Motor	Cabin Roof, forward, left
53	Connector, Fire Detector Amplifier	Nose Compartment
59	Connector, Engine Disconnect	Engine Compartment, left
61	Connector, Generator Disconnect	Engine Compartment, left
64S	Connector, Torque Pressure Transmitter	Engine Compartment
73	Connector, Engine Oil Pressure Switch	Engine Compartment
73S	Connector, Hot Air Valve Pressure Switch	Engine Compartment
77	Connector, Oil Temperature Bulb	Engine Compartment
77S	Connector, Ice Detector Probe	Pylon Compartment
79	Connector, Oil Pressure Transmitter	Engine Compartment
81	Connector, Fuel Pressure Transmitter	Engine Compartment
83	Connector, Oil Tank Chip	Engine Compartment
84S	Connector, De-icing Hot Air Valve	Engine Compartment
87	Connector, Engine Fuel Control	Engine Compartment
88S	Connector, Igniter Box	Engine Compartment
89	Connector, Gas Producer Tachometer	Engine Compartment
89S	Connector, Start Fuel Solenoid Valve	Engine Compartment
91	Connector, Igniter	Engine Compartment
97	Connector, Fire Detectors/Extinguisher	Aft Firewall
97A	Connector, Doghouse Disconnect	Aft Firewall
99	Connector, Engine Disconnect	Engine Compartment, center, floor
105	Connector, # 2 Hydraulic Temperature Switch	Pylon Compartment
106	Connector, # 1 Hydraulic Temperature Switch	Pylon Compartment
109	Connector, Torque Transmitter	Engine Compartment
110	Connector, Torque Transmitter	Engine Compartment
111	Connector, Power Turbine Tachometer	Engine Compartment
116	Connector, Anti-collision Light, Upper	Engine Compartment
117	Connector, Tail Boom Disconnect	Tailboom
118	Connector, Smoke Detector Disconnect	Tailboom

• COPYRIGHT © 2023 BY EAGLE COPTERS MAINTENANCE LTD •
THIS DOCUMENT IS PRIVATE AND CONFIDENTIAL AND IS SUPPLIED ON THE EXPRESS CONDITION THAT IT IS NOT TO BE USED FOR ANY PURPOSE OR COPIED OR COMMUNICATED TO ANY OTHER PERSON WITHOUT WRITTEN PERMISSION FROM EAGLE COPTERS MAINTENANCE LTD.

Table 96-1. Equipment Reference Designator, Nomenclature, and Location

REF DES	NOMENCLATURE	LOCATION
119, 120	Connector, Smoke Detector Amplifier	Nose Compartment
121	Connector, Fuel Shutoff Valve	Pylon Compartment
123	Connector, Forward Interconnect Valve	Fuel Cells, lower, forward of
124	Connector, Aft Interconnect Valve	Fuel Cells, lower, between
126	Connector, # 1 Hydraulic Bypass Bypass Valve	Pylon Compartment
128	Connector, Cargo Hook	Pylon Compartment
129	Connector, Cargo Sling	Pylon Compartment
130	Connector, Fuel Quantity Coupler	Cabin Floor, Station 63, center
131	Connector, Fuel Quantity Coupler	Cabin Floor, Station 63, center
132	Connector, Fuel Quantity Coupler	Cabin Floor, Station 63, center
133	Connector, Fuel Quantity Coupler	Cabin Floor, Station 63, center
134A, B	Connector, Fuel Quantity Probe	Fuel Cell, right
135A, B	Connector, Fuel Quantity Probe	Fuel Cell, right
135S	Connector, Ice Interpreter	Nose Compartment
136S	Connector, Ice Interpreter	Nose Compartment
137A, B	Connector, Fuel Quantity Probe	Fuel Cell, left
138A, B	Connector, Fuel Quantity Probe	Fuel Cell, left
139A, B	Connector, Fuel Quantity Probe	Fuel Cell, aft
140A, B	Connector, Fuel Quantity Probe	Fuel Cell, aft
141, 142	Connector, Fuel Capacitance Simulator	Cabin Roof, Station 166 right
143, 144	Connector, Fuel Capacitance Simulator	Cabin Roof, Station 166 left
147A, B, C	Connector, Fuel Quantity Tee	Cabin Roof, Station 160 left
148A, B, C	Connector, Fuel Quantity Tee	Cabin Roof, Station 160 left
149A, B, C	Connector, Fuel Quantity Tee	Cabin Floor, Station 74 left
150	Connector, Measured Gas Temperature	Instrument Panel
150	Connector, Exhaust Gas Temperature	Instrument Panel
155	Connector, Magnetic Brake, Anti-torque	Cabin Floor, station 63
156	Connector, Magnetic Brake, Fore & Aft	Cabin Floor, station 63
156S	Connector, Engine Differential Pressure Switch	Engine Compartment
157	Connector, Magnetic Brake, Lateral	Cabin Floor, station 23
161	Connector, Dual Voltmeter	Instrument Panel
163, 164	Connector, Pilot Dual Tachometer Indicator	Instrument Panel
165, 166	Connector, Copilot Dual Tachometer Indicator	Instrument Panel
167	Connector, Door Post Solenoid	Door Post, right
168	Connector, Heater Compartment	Heater Compartment
169	Connector, Heater Mixing Valve	Heater Compartment
171	Connector, # 2 Hydraulic Pressure Solenoid	Pylon Compartment
173	Connector, # 2 Hydraulic Pressure Switch	Pylon Compartment
174	Connector, # 1 Hydraulic Pressure Switch	Pylon Compartment
182	Connector, # 1 Fuel Differential Pressure Switch	Engine Compartment
183	Connector, # 2 Fuel Differential Pressure Switch	Engine Compartment
185	Connector, Miscellaneous Panel	Pedestal, forward

• COPYRIGHT © 2023 BY EAGLE COPTERS MAINTENANCE LTD •
THIS DOCUMENT IS PRIVATE AND CONFIDENTIAL AND IS SUPPLIED ON THE EXPRESS CONDITION THAT IT IS NOT TO BE USED FOR ANY PURPOSE OR COPIED OR COMMUNICATED TO ANY OTHER PERSON WITHOUT WRITTEN PERMISSION FROM EAGLE COPTERS MAINTENANCE LTD.

Table 96-1. Equipment Reference Designator, Nomenclature, and Location

REF DES	NOMENCLATURE	LOCATION
186	Connector, Standby Compass	Above Windshield, right
187	Connector, Aft Outlet Actuator Valve	Heater Compartment
193S	Connector, Fire Extinguisher Bottle	Aft Firewall, left
210	Connector, # 1 Hydraulic Indicator	Instrument Panel
211	Connector, # 2 Hydraulic Indicator	Instrument Panel
212	Connector, # 1 Hydraulic Pressure Transmitter	Pylon Compartment
219	Connector, # 2 Hydraulic Pressure Transmitter	Pylon Compartment
222	Connector, Winterization Kit Valve	Heater Compartment
223	Connector, Heater Control Line	Heater Compartment
225	Connector, Landing Light	Fuselage, underneath
226	Connector, Anti-collision Light, Lower	Fuselage, underneath
229	Connector, # 2 Hydraulic Temperature Bulb	Pylon Compartment
230	Connector, # 1 Hydraulic Temperature Bulb	Pylon Compartment
239	Connector, Heater Relay	Cabin Roof, Station 68, left
280S	Connector, Engine Oil Filter Pressure Switch	Engine Compartment
281S, 282S	Connector, Engine Fire Detector Amplifier	Nose Compartment
286, 287	Connector, Interturbine Temperature Compensator	Engine Compartment, right
290S	Connector, Engine Oil Tank Chip Detector	Engine Compartment
299	Connector, # 2 Hydraulic Pressure Switch	Pylon Compartment
300	Connector, # 1 Hydraulic Pressure Switch	Pylon Compartment
350	Connector, Cabin Temperature Control	Cabin Floor, Station 66
351	Connector, Cabin Temperature Motor	Heater Compartment
400	Connector, Pilot Gyro Directional Indicator	Instrument Panel
401	Connector, Pilot Turn & Bank Indicator	Instrument Panel
500	Connector, Airflow Sensor	Tailboom Disconnect Area
501	Connector, Copilot Master Caution Light	Instrument Panel
502	Connector, Pilot Master Caution Light	Instrument Panel
503	Connector, Copilot Engine RPM Light	Instrument Panel
504	Connector, Pilot Engine RPM Light	Instrument Panel
505	Connector, Copilot Rotor RPM Light	Instrument Panel
506	Connector, Pilot Rotor RPM Light	Instrument Panel
507	Connector, Copilot Cargo Fire Light	Instrument Panel
508	Connector, Pilot Cargo Fire Light	Instrument Panel
509	Connector, Copilot Cargo Release Armed Light	Instrument Panel
510	Connector, Pilot Cargo Release Armed Light	Instrument Panel
511	Connector, Heater ON/OFF Light	Instrument Panel
512	Connector, Master Caution Light	Vertical Reference Door
513	Connector, Engine Fire Light	Vertical Reference Door
514	Connector, Longline Armed Light	Vertical Reference Door
9001	Connector, Circuit Breaker Panel Disconnect	Nose Compartment
9002	Connector, Circuit Breaker Panel Disconnect	Nose Compartment
9003	Connector, Circuit Breaker Panel Disconnect	Cabin Roof, Station 63, center

• COPYRIGHT © 2023 BY EAGLE COPTERS MAINTENANCE LTD •
THIS DOCUMENT IS PRIVATE AND CONFIDENTIAL AND IS SUPPLIED ON THE EXPRESS CONDITION THAT IT IS NOT TO BE USED FOR ANY PURPOSE OR COPIED OR COMMUNICATED TO ANY OTHER PERSON WITHOUT WRITTEN PERMISSION FROM EAGLE COPTERS MAINTENANCE LTD.

Table 96-1. Equipment Reference Designator, Nomenclature, and Location

REF DES	NOMENCLATURE	LOCATION
9004	Connector, Circuit Breaker Panel Disconnect	Nose Compartment
9005	Connector, Circuit Breaker Panel Disconnect	Nose Compartment
9006	Connector, Circuit Breaker Panel Disconnect	Nose Compartment
9007	Connector, Circuit Breaker Panel Disconnect	Cabin Roof, Station 63, center
9008	Connector, Circuit Breaker Panel Disconnect	Nose Compartment
PS		
PS1	Inverter # 1	Nose Compartment, lower
PS7	Inverter # 2	Nose Compartment, Lower
Q		
Q4	Transistor, Secondary Instrument Lights	Cabin Roof, Station 116, right
Q5	Transistor, Overhead Console Lights	Cabin Roof, Station 142, right
Q6	Transistor, Pedestal Lights	Cabin Roof, Station 92, left
Q7	Transistor, Overhead Console Lights	Cabin Roof, Station 92, right
Q8	Transistor, Engine Instrument Lights	Nose Compartment
Q9	Transistor, Engine Instrument Lights	Nose Compartment
R		
R1	Rheostat, Pilot Instrument Lights	Overhead Console
R2	Rheostat, Copilot Instrument Lights	Overhead Console
R3	Rheostat, Engine Instrument Lights	Overhead Console
R4	Rheostat, Secondary Instrument Lights	Overhead Console
R5	Rheostat, Overhead Console Lights	Overhead Console
R6	Rheostat, Pedestal Lights	Overhead Console
R7	Rheostat, Dome Lights	Overhead Console
R9	Shunt, Generator	Cabin Roof, Station 142, left
R15	Resistor, Windshield Wipers	Cabin Roof, Station 64, left
R16	Resistor, Windshield Wipers	Cabin Roof, Station 64, left
R17	Resistor, Windshield Wipers	Cabin Roof, Station 64, left
R19	Resistor, Windshield Wipers	Cabin Roof, Station 64, right
R20	Resistor, Windshield Wipers	Cabin Roof, Station 64, right
R21	Resistor, Windshield Wipers	Cabin Roof, Station 64, right
R28	Resistor, Secondary Instrument Lights	Overhead Console
R30	Resistor, Pedestal Lights	Overhead Console
R32	Resistor, Overhead Console Lights	Overhead Console
R33	Resistor, Engine Instrument Lights	Overhead Console
R37	Resistor, Heater System	Cabin Roof, Station 63, left
R43	Resistor, Caution Lights Dimming	Nose Compartment, TB50
R44	Resistor, Caution Lights Dimming	Nose Compartment, TB50
R45	Resistor, Caution Lights Dimming	Nose Compartment, TB50
R46	Resistor, Caution Lights Dimming	Nose Compartment, TB50
R53	Resistor, Transformer	Cabin Roof, Station 142, left
R55	Resistor, Transformer	Cabin Roof, Station 69, center
R57	Resistor, Transformer	Nose Compartment, lower
R157	Resistor, Fire Detection System	Overhead Console

• COPYRIGHT © 2023 BY EAGLE COPTERS MAINTENANCE LTD •
THIS DOCUMENT IS PRIVATE AND CONFIDENTIAL AND IS SUPPLIED ON THE EXPRESS CONDITION THAT IT IS NOT TO BE USED FOR ANY PURPOSE OR COPIED OR COMMUNICATED TO ANY OTHER PERSON WITHOUT WRITTEN PERMISSION FROM EAGLE COPTERS MAINTENANCE LTD.

Table 96-1. Equipment Reference Designator, Nomenclature, and Location

REF DES	NOMENCLATURE	LOCATION
S		
S1	Switch, Engine Fire Handle	Instrument Panel
S3	Switch, Fire Extinguisher Discharge	Instrument Panel
S7	Switch, Fuel Quantity Select	Instrument Panel
S9	Switch, # 1 Hydraulic System	Pedestal, forward
S10	Switch, Force Trim	Pedestal, forward
S13	Switch, Governor Control	Pedestal, forward
S15	Switch, Rotor RPM Audio	Pedestal, forward
S17	Switch, Fuel Shutoff Valve	Pedestal, forward
S19	Switch, Fuel Interconnect	Pedestal, forward
S20	Switch, Landing Light (extend-retract)	Pilot Collective Stick
S21	Switch, Searchlight (on-stow)	Pilot Collective Stick
S22	Switch, Landing Light (on-off)	Pilot Collective Stick
S23	Switch, Engine Start	Pilot Collective Stick
S25	Switch, Searchlight Control	Pilot Collective Stick
S26	Switch, Transmission Oil Temperature	Transmission
S27	Switch, Governor RPM	Pilot Collective Stick
S28	Switch, Transmission Oil Pressure	Pylon Compartment
S29	Switch, Idle Stop	Pilot Collective Stick
S31	Switch, Aft Outlets Limit	Pedestal, forward
S32	Switch, Cargo Release	Pilot Cyclic Stick
S34	Switch, Force Trim	Pilot Cyclic Stick
S36	Switch, Cargo Release	Copilot Cyclic Stick
S38	Switch, Force Trim	Copilot Cyclic Stick
S40	Switch, Governor RPM	Copilot Collective Stick
S41	Switch, # 1 Sump Drain	Fuselage, Station 129, left
S42	Switch, # 2 Sump Drain	Fuselage, Station 129, right
S43	Switch, Generator Reset	Overhead Console
S45	Switch, Non-essential Buss	Overhead Console
S46	Switch, Battery	Overhead Console
S47	Switch, Radio-ICS	Pilot Cyclic Stick
S48	Switch, Radio-ICS	Copilot Cyclic Stick
S53	Switch, # 1 Inverter	Overhead Console
S58	Switch, Engine Fuel Pump Pressure	Engine Compartment
S59	Switch, Position Lights	Overhead Console
S62	Switch, Anti-collision Lights	Overhead Console
S63	Switch, Dome Lights	Overhead Console
S64	Switch, Windshield Wiper Select	Overhead Console
S65	Switch, Windshield Wiper Speed	Overhead Console
S67	Switch, Cargo Release Arm	Overhead Console
S68	Switch, Heater Aft Outlet	Overhead Console
S69	Switch, Pitot Heater	Overhead Console
S71	Switch, Door Lock	Passenger Door, left
S72	Switch, Door Lock	Passenger Door, right
S81	Switch, Overheat, Aft	Heater Compartment

• COPYRIGHT © 2023 BY EAGLE COPTERS MAINTENANCE LTD •
THIS DOCUMENT IS PRIVATE AND CONFIDENTIAL AND IS SUPPLIED ON THE EXPRESS CONDITION THAT IT IS NOT TO BE USED FOR ANY PURPOSE OR COPIED OR COMMUNICATED TO ANY OTHER PERSON WITHOUT WRITTEN PERMISSION FROM EAGLE COPTERS MAINTENANCE LTD.

Table 96-1. Equipment Reference Designator, Nomenclature, and Location

REF DES	NOMENCLATURE	LOCATION
S82	Switch, Cargo Compartment Door	Cargo Compartment Door Sill
S85	Switch, Cargo Fire Test	Instrument Panel
S86	Switch, Fuel Flow	Fuel Cell, right
S87	Switch, Fuel Flow	Fuel Cell, left
S88	Switch, Fuel Level	Fuel Cell, right
S89	Switch, Fuel Level	Fuel Cell, left
S91	Switch, Fuel Pump # 1	Pedestal, forward
S92	Switch, Fuel Pump # 2	Pedestal, forward
S94, S95	Switch, Hydraulic Filter Clogged	Pylon Compartment
S96	Switch, Utility Light	Overhead Console
S100	Switch, Engine Oil Pressure	Engine Compartment
S101	Switch, Fuel Differential Pressure	Engine Compartment
S102	Switch, Engine Oil Filter Differential Pressure	Engine Compartment
S103	Switch, Start Fuel	Pedestal, forward
S104	Switch, Fire System Test # 1	Instrument Panel
S105	Switch, External Power Door	Nose Compartment, forward
S106	Switch, Fire System Test # 2	Instrument Panel
S107	Switch, Fire System Test # 3	Instrument Panel
S108	Switch, Engine Oil Temperature	Oil Cooler
S110	Sensor, Hoist Overload (if installed)	Cabin Roof
S149	Switch, Engine Fuel Pump Pressure	Engine Compartment
S160	Switch, Bleed Air Priority	Cabin Floor, station 60, left
S185	Sensor, Non-essential Buss Load	Cabin Roof, Station 72, left
S187	Switch, Overheat, Forward	Heater Compartment
S189	Switch, Heater	Overhead Console
S190	Switch, Vent Blowers	Overhead Console
S191	Switch, Heater Control Line Sensor	Heater Compartment
S198	Switch, # 2 Inverter	Overheat Console
S199	Switch, Engine Torque Pressure	Engine Compartment
S204	Switch, # 1 Hydraulic Temperature	Hydraulic Reservoir # 1
S205	Switch, # 2 Hydraulic Temperature	Hydraulic Reservoir # 2
S206	Switch, # 1 Hydraulic Pressure	Hydraulic Module # 1
S207	Switch, # 2 Hydraulic Pressure	Hydraulic Module # 2
S210	Switch, Master Caution Test	Overhead Console
T		
T1	Transformer	Nose Compartment, lower
T3	Transformer	Cabin Roof, Station 142, left
T5	Transformer	Cabin Roof, Station 69, center
TB2, TB3	Terminal Board	Overhead Console
TB4	Terminal Board	Pedestal, inside A3
TB6	Terminal Board, Utility Light	Cabin Roof, forward, right
TB7	Terminal Board, Utility Light	Cabin Roof, forward, left
TB9	Terminal Board, Position Lights	Cabin Roof, Station 92, left
TB10	Terminal Board	Fuel Cell, right
TB11	Terminal Board	Fuel Cell, left

• COPYRIGHT © 2023 BY EAGLE COPTERS MAINTENANCE LTD •
THIS DOCUMENT IS PRIVATE AND CONFIDENTIAL AND IS SUPPLIED ON THE EXPRESS CONDITION THAT IT IS NOT TO BE USED FOR ANY PURPOSE OR COPIED OR COMMUNICATED TO ANY OTHER PERSON WITHOUT WRITTEN PERMISSION FROM EAGLE COPTERS MAINTENANCE LTD.

Table 96-1. Equipment Reference Designator, Nomenclature, and Location

REF DES	NOMENCLATURE	LOCATION
TB12	Terminal Board, Lighting & Grounds	Inside Pedestal
TB14	Terminal Board, Secondary Lights	Instrument Panel, back side, left
TB22	Terminal Board, Copilot Headset	Cabin Roof, Copilot
TB23	Terminal Board, Pilot Headset	Cabin Roof, Pilot
TB45	Terminal Board, Fire Detection	Overhead Console, right
TB50	Terminal Board, Light Dimming	Nose Compartment, shelf
TB80	Terminal Board, Transmission Chip Detector	Pedestal, right
TB901	Terminal Board, Essential Buss	Cabin Roof, Station 75, center
TB902	Terminal Board, Non-essential Buss	Cabin Roof, Station 77, center
Z		
Z1	Box, RPM Limit Warning	Nose Compartment, left
Z4	Amplifier, Engine Fire Detector	Nose Compartment
Z5	Bulb, Transmission Temperature	Pylon Compartment
Z7	Bulb, Engine Oil Temperature	Engine Compartment
Z8	Ice Interpreter	Nose Compartment
Z9	Ignition Unit	Engine Compartment
Z11	Amplifier, Smoke Detector	Nose Compartment
Z12	Smoke Detector	Cargo Compartment
Z13	Ice Detector Probe	Pylon Compartment
Z15	Capacitance Simulator	Cabin Roof, Station 166, left
Z16	Capacitance Simulator	Cabin Roof, Station 166, right
Z23	DC Control Unit	Nose Compartment, lower
Z25	Bulb, # 2 Hydraulic Temperature	Pylon Compartment, right
Z26	Bulb, # 1 Hydraulic Temperature	Pylon Compartment, left
Z27	Compensator, Interturbine Temperature	Engine Compartment, right
Z55	Controller, Cabin Temperature Servo	Cabin, Station 66, right
27TB1	Terminal Junction Block	Instrument Panel, back side
27TB2	Terminal Junction Block	Instrument Panel, back side

• COPYRIGHT © 2023 BY EAGLE COPTERS MAINTENANCE LTD •
THIS DOCUMENT IS PRIVATE AND CONFIDENTIAL AND IS SUPPLIED ON THE EXPRESS CONDITION THAT IT IS NOT TO BE USED FOR ANY PURPOSE OR COPIED OR COMMUNICATED TO ANY OTHER PERSON WITHOUT WRITTEN PERMISSION FROM EAGLE COPTERS MAINTENANCE LTD.

CHAPTER 96 – ELECTRICAL SYSTEM (96-00-00)

96.1.5 Primary and Secondary Electrical Power Analysis

The helicopter is equipped with a 28 volt direct current electrical system. Power for this system is supplied by a 42 ampere-hour, lead acid battery and a 28 volt, 300 amp starter/generator. Major components of the direct current power system consist of the battery, starter/generator, DC control unit, relays, and circuit breakers. Circuits in the electrical system are single conductor circuits with the negative leads of the battery and starter/generator ground to the helicopter structure.

A secondary source of power, used to operate the equipment that requires alternating current is supplied by a 250 Volt-amp, single phase, solid state inverter. Two such inverters are included in the system, but only one operates at any given time.

Operational checks should be performed using external power whenever possible. After repair or replacement of equipment or a system, operational checks should be conducted to ensure that the helicopter electrical systems are functioning properly. Utilize system wiring diagrams (Chapter 98), and equipment location diagrams (Drawing D212-725-8, D212-725-8-G2, Appendix A), in accomplishing functional tests of electrical circuits and components. This manual does not provide functional or operational testing for equipment requiring bench testing.

96.1.6 Power Source Component Data

Individual power-system components and their respective ratings are shown in Table 96-2 below.

Table 96-2. Power System Components

ITEM	STARTER/ GENERATOR	BATTERY	INVERTER # 1 & # 2
# of Units	1	1	2
Rating	300 Amps	42 AH	250 VA
Voltage	30 VDC	24 VDC	115/26 VAC
Frequency			400 Hz.
Power Factor			0.95 Lead 0.75 Lag
Configuration			Single Phase
Voltage Regulator	3.6% Max.		± 2.18%
DC Control Unit			± 1.75%

• COPYRIGHT © 2023 BY EAGLE COPTERS MAINTENANCE LTD •
THIS DOCUMENT IS PRIVATE AND CONFIDENTIAL AND IS SUPPLIED ON THE EXPRESS CONDITION THAT IT IS NOT TO BE USED FOR ANY PURPOSE OR COPIED OR COMMUNICATED TO ANY OTHER PERSON WITHOUT WRITTEN PERMISSION FROM EAGLE COPTERS MAINTENANCE LTD.

96.1.7 Summary of System Analysis

The available excess capacities are as follows:

NOTE

All available excess capacities are based on most severe conditions disclosed by this analysis over a 15 minute interval (takeoff, basic helicopter).

Table 96-3. System Analysis

SYSTEM	AVAILABLE EXCESS CAPACITY
Primary Power – 28 VDC	
Starter/ Generator	167 Amps
Secondary Power – 115 VAC	
Inverter # 1	227 VA
Inverter # 2	Unloaded
Emergency	
28 VDC	42 Amps
115 VAC	227 VA

96.1.8 Electrical Safety and Hazards

WARNING

OBEY ALL THE DAFETY PRECAUTIONS WHEN YOU DO MAINTENANCE ON OR NEAR ELECTRICAL/ELECTRONIC EQUIPMENT

High voltages in the electrical and electronic systems are hazardous to personnel. Electrical shocks may cause serious injuries. The generation of sparks in the presence of flammable vapors may cause explosions. Metallic objects that come in contact with the powered electrical conductors or the components can cause injuries to personnel and damage to components.

96.1.9 Safety Practices- General

WARNING

OBEY ALL THE DAFETY PRECAUTIONS WHEN YOU DO MAINTENANCE ON OR NEAR ELECTRICAL/ELECTRONIC EQUIPMENT

96.1.9.1 When you do any maintenance or repairs to an electrical system, or to any system that required electrical power, follow these precautions:

96.1.9.1.1 Personnel must be trained for the specific task

96.1.9.1.2 Do not touch components that have electrical power. Direct contact with a high voltage circuit or lower voltage circuit with a high current capacity can be fatal.

96.1.9.1.3 Proper tools and safety equipment must be available. Use them to ensure the safety of personnel. Use them to make sure the given task is done to the specified standards.

96.1.9.1.4 Do not wear jewelry when you work on a system that is powered.

96.1.9.1.5 Use recommended test equipment or their equivalents. Follow the equipment operation instructions. Additional test equipment, lights, etc. may be used as desired, provided the purpose and intent of the specified test is not compromised.

96.1.9.1.6 The leads and the probes of the test equipment must be serviceable. They must be of sufficient length to put test equipment at a proper location. The location of the test

• COPYRIGHT © 2023 BY EAGLE COPTERS MAINTENANCE LTD •
THIS DOCUMENT IS PRIVATE AND CONFIDENTIAL AND IS SUPPLIED ON THE EXPRESS CONDITION THAT IT IS NOT TO BE USED FOR ANY PURPOSE OR COPIED OR COMMUNICATED TO ANY OTHER PERSON WITHOUT WRITTEN PERMISSION FROM EAGLE COPTERS MAINTENANCE LTD.

equipment must give a full view of the indicator. Make sure there is no tension on the test leads or the probes.

96.1.9.1.7 Give special attention to the WARNINGS , CAUTIONS and NOTES before a maintenance procedure is initiated. Some maintenance procedures require the use of toxic chemicals, extreme temperatures and flammable materials.

96.1.10 Standard Practices - Electrical Maintenance or Repairs

MATERIALS REQUIRED

NUMBER	NOMENCLATURE
C-136	Caps and/or Plugs
C-156	Caps and/or Plugs

WARNING

UNLESS POWER IS REQUIRED FOR A MAINTENANCE PROCEDURE, DISCONNECT BATTERY AND THE EXTERNAL POWER. PUT A TAG ON THE BATTERY SWITCH TO INFORM OTHER PERSONNEL THAT WORK IS BEING DONE.

WARNING

INFORM ALL OF THE PERSONNEL THAT WORK ON THE HELICOPTER BEFORE YOU SUPPLY POWER TO THE ELECTRICAL SYSTEMS.

96.1.10.1 The procedure that follows will help avoid injuries to personnel and damage to equipment.

96.1.10.1.1 If an electrical connector is to be left disconnected, install protective caps and/or plugs to protect the contacts from shorts and prevent FOD damage. Use either caps and/or plugs (C-136) for Electrostatic Discharge Sensitive (ESDS) equipment, or caps and/or plugs (C-156) for other non-ESDS sensitive equipment.

96.1.10.1.2 If a circuit breaker must remain open until a maintenance procedure is complete, install a clip or a plastic cable strap under the circuit breaker button. Put a tag on the circuit breaker to inform other personnel not to set the circuit breaker to the closed position.

96.1.10.1.3 If a switch must remain open or closed until a maintenance procedure is complete, put a tag on the switch to inform other personnel not to touch the switch.

96.1.10.1.4 Inform all of the personnel that work on the helicopter before you supply power to the electrical systems.

96.1.11 Standard Practices - Electrical Work in Confined Spaces

96.1.11.1 Some equipment installations are in confined areas and access to the test points can be difficult. When you do a test on a powered circuit in a confined area follow these precautions:

96.1.11.1.1 Have the applicable fire safety equipment available when you do a maintenance procedure.

96.1.11.1.2 Before you start work in a confined area, look at the wiring diagrams of the applicable electrical systems and at the location of the equipment you will test. Make a note of the location of the high voltage areas near the equipment you will test.

96.1.11.1.3 Be careful around control cable or mechanism. Movement of engine or flight controls can cause movement of control cables or rods.

96.1.11.1.4 For systems not tested, set the applicable circuit breakers to the open position.

96.1.12 Standard Practices - After Electrical Maintenance or Repairs

96.1.12.1 After completing a task on any system, make sure you do the steps that follow

• COPYRIGHT © 2023 BY EAGLE COPTERS MAINTENANCE LTD •
THIS DOCUMENT IS PRIVATE AND CONFIDENTIAL AND IS SUPPLIED ON THE EXPRESS CONDITION THAT IT IS NOT TO BE USED FOR ANY PURPOSE OR COPIED OR COMMUNICATED TO ANY OTHER PERSON WITHOUT WRITTEN PERMISSION FROM EAGLE COPTERS MAINTENANCE LTD.

before you return the helicopter to the flight configuration.

96.1.12.1.1 Remove all protective caps from equipment or electrical equipment.

96.1.12.1.2 Make sure all of the disconnected electrical connectors are properly reinstalled.

96.1.12.1.3 After troubleshooting any electrical system, reinstall any removed control panels or electrical components such as relays, terminal modules, switches and other miscellaneous components.

96.1.12.1.4 Remove the tags or cable straps from the switches and the circuit breakers. Close the circuit breakers.

NOTE

As applicable, refer to the engine shutdown procedures (FMS-D212-725, Section 2) to determine the switch and control positions.

96.1.12.1.5 Make sure all of the switches and the controls are in the correct position. This prevents the accidental system operation when the power is turned on.

96.1.12.1.6 If applicable, connect the battery.

96.1.12.1.7 Do an operational check of the system or systems that were repaired.

96.1.12.1.8 Install all applicable access panels and close all doors (Chapter 52).

96.1.13 Miscellaneous Electrical Tools

The majority of tools required to perform basic electrical maintenance and repair practices are listed in the Electrical Standard Practices Manual (BHT-ELEC-SPM).

96.1.14 Operational Checks - Electrical Systems

Throughout this chapter, when performing operational checks, external power should be utilized whenever possible. Performing operational checks on battery power may deplete the charge in the battery.

Perform operational checks to ensure no new malfunctions have been introduced when components have been repaired or replaced, and/or airframe wiring has been repaired or replaced.

Operational checks for each applicable system are co-located with the system diagrams, wiring diagrams in accomplishing operation checks.

96.1.15 Troubleshooting - Electrical Systems

The following troubleshooting procedures are general in nature and may be used as a guide to find a malfunction in an electrical system. Make sure the system and component operation is understood prior to doing any troubleshooting.

96.1.15.1 Make sure electrical power is applied to the system being checked. Make sure ground connections meet required bonding values and are tight and properly installed. Refer to the Electrical Standard Practices Manual (BHT-ELEC-SPM) Chapter 8 for bonding information and to D212-725-2/-2G2 for the applicable wiring diagrams

96.1.15.2 Make sure the switches, relays, diodes and other electrical components are not defective.

96.1.15.3 Examine the wires, connectors and terminal junctions. Make sure they are in good condition. Make sure the connections are properly connected and tightened.

96.1.15.4 Make sure that each component of a system operates correctly.

96.1.16 Miscellaneous Electrical Components - Maintenance Practices

• COPYRIGHT © 2023 BY EAGLE COPTERS MAINTENANCE LTD •
THIS DOCUMENT IS PRIVATE AND CONFIDENTIAL AND IS SUPPLIED ON THE EXPRESS CONDITION THAT IT IS NOT TO BE USED FOR ANY PURPOSE OR COPIED OR COMMUNICATED TO ANY OTHER PERSON WITHOUT WRITTEN PERMISSION FROM EAGLE COPTERS MAINTENANCE LTD.

CHAPTER 96 – ELECTRICAL SYSTEM (96-00-00)

The miscellaneous electrical components include but are not limited to: relays, contactors, solenoids, rheostats, switches, leads, connectors, wires, receptacles, shock mounts, capacitors, diodes, resistors and panel lights.

96.1.17 Miscellaneous Electrical Components - Removal

CAUTION

BEFORE ATTEMPTING TO REMOVE AN ELECTRICAL/ELECTRONIC COMPONENT, DISCONNECT ELECTRICAL POWER SOURCE.

MATERIALS REQUIRED

NUMBER	NOMENCLATURE
C-136	Caps and/or Plugs
C-156	Caps and/or Plugs

96.1.17.1 Disconnect the battery

96.1.17.2 Make sure all of the other sources of DC power are disconnected.

NOTE

To assist with reinstallation, it is recommended that the wires be identified for their installed location and orientation prior to removal.

96.1.17.3 Identify the connectors or wires connected to the component.

96.1.17.4 Disconnect these electrical connectors or wires from the component.

96.1.17.5 Install caps and/or plugs (C-136) or caps and/or plugs (C-156) on connectors or apply tape on the end of the wires.

96.1.17.6 Remove the attaching hardware. If the attaching hardware is serviceable, keep it for reinstallation.

96.1.17.7 Remove the component

96.1.17.8 Do a general visual inspection of the immediate area where the component was removed. See Miscellaneous Electrical Components Inspection for the inspection requirements.

96.1.18 Miscellaneous Electrical Components - Cleaning

96.1.18.1 Remove all loose debris with a brush or clean cloth.

CAUTION

SOLVENTS CAN CAUSE DAMAGE TO SOME MATERIALS. THEY CAN REMOVE LUBRICANTS AND SOFTEN CERTAIN MATERIALS. REFER TO THE STANDARD PRACTICES MANUAL (BHT-ALL-SPM) FOR THE APPROPRIATE SOLVENT FOR THE MATERIAL YOU ARE CLEANING.

96.1.18.2 Remove grease or dirt with an approved solvent depending on the material of the component (BHT-ALL-SPM, Chapter 5).

96.1.18.3 Make sure the electrical component is totally dry before installation.

96.1.19 Miscellaneous Electrical Components - Inspection

NOTE

It is recommended to do a general visual inspection in the immediate area where the component was removed.

96.1.19.1 For the inspection requirements of miscellaneous electrical components, see Table 96-4.

96.1.19.2 Examine the attaching hardware for cracks, wear, mechanical damage, and corrosion damage. Replace as necessary.

• COPYRIGHT © 2023 BY EAGLE COPTERS MAINTENANCE LTD •
THIS DOCUMENT IS PRIVATE AND CONFIDENTIAL AND IS SUPPLIED ON THE EXPRESS CONDITION THAT IT IS NOT TO BE USED FOR ANY PURPOSE OR COPIED OR COMMUNICATED TO ANY OTHER PERSON WITHOUT WRITTEN PERMISSION FROM EAGLE COPTERS MAINTENANCE LTD.

Table 96-4. Miscellaneous Electrical Component Inspections - Electrical Wire Interconnection System (EWIS)

Item	Defect, Damage, Failure or Irregularity
Wire/Wire Harness	Wire Bundle/wire bundle or wire bundle/structure contact/chafing Wire bundle sagging or improperly secured Wires damaged (obvious damage due to mechanical impact, overheat, localized chafing etc.) Lacing tape and/or ties missing/incorrectly installed Wiring protection sheath/conduit deformation or incorrectly installed End of sheath rubbing on end attachment device Grommet missing or damaged Dust and lint accumulation Surface contamination by metal shavings/swarf Contamination by liquids Deterioration of previous repairs (e.g. splices) Deterioration of production splices Inappropriate repairs (e.g. incorrect splice) Inappropriate attachments to or separation from fluid lines.
Connectors	External corrosion on receptacles Missing/loose or damaged dust cap Backshell tail broken Rubber pad or packing on backshell missing No backshell wire securing device Fool proofing chain broken Missing or broken safety wire Discoloration/evidence of overheating on terminal lugs/blocks Torque stripe misalignment Damaged or bent contacts
Switches/switchlights and annunciators	Rear protection cap damaged Corrosion Weak detents
Ground points	Corrosion and looseness
Bonding braid/bonding jumper	Braid broken or disconnected Multiple strands corroded or broken
Wiring clamps or brackets	Corroded Broken/missing Bent or twisted Faulty attachment (bad attachment or fastener missing) De-bonded/detached Protection/cushion damaged
Supports (rails or tubes/conduit)	Broken Deformed Fastener missing Missing edge protection on rims of feed through holes Racetrack cushion damaged Obstructed drainage holes (in conduits)

• COPYRIGHT © 2023 BY EAGLE COPTERS MAINTENANCE LTD •
THIS DOCUMENT IS PRIVATE AND CONFIDENTIAL AND IS SUPPLIED ON THE EXPRESS CONDITION THAT IT IS NOT TO BE USED FOR ANY PURPOSE OR COPIED OR COMMUNICATED TO ANY OTHER PERSON WITHOUT WRITTEN PERMISSION FROM EAGLE COPTERS MAINTENANCE LTD.

Table 96-4. Miscellaneous Electrical Component Inspections - Electrical Wire Interconnection System (EWIS)

Item	Defect, Damage, Failure or Irregularity
Circuit breakers, contactors, relays, rheostats or fuses	Signs of overheating Sins of arcing Looseness Corrosion

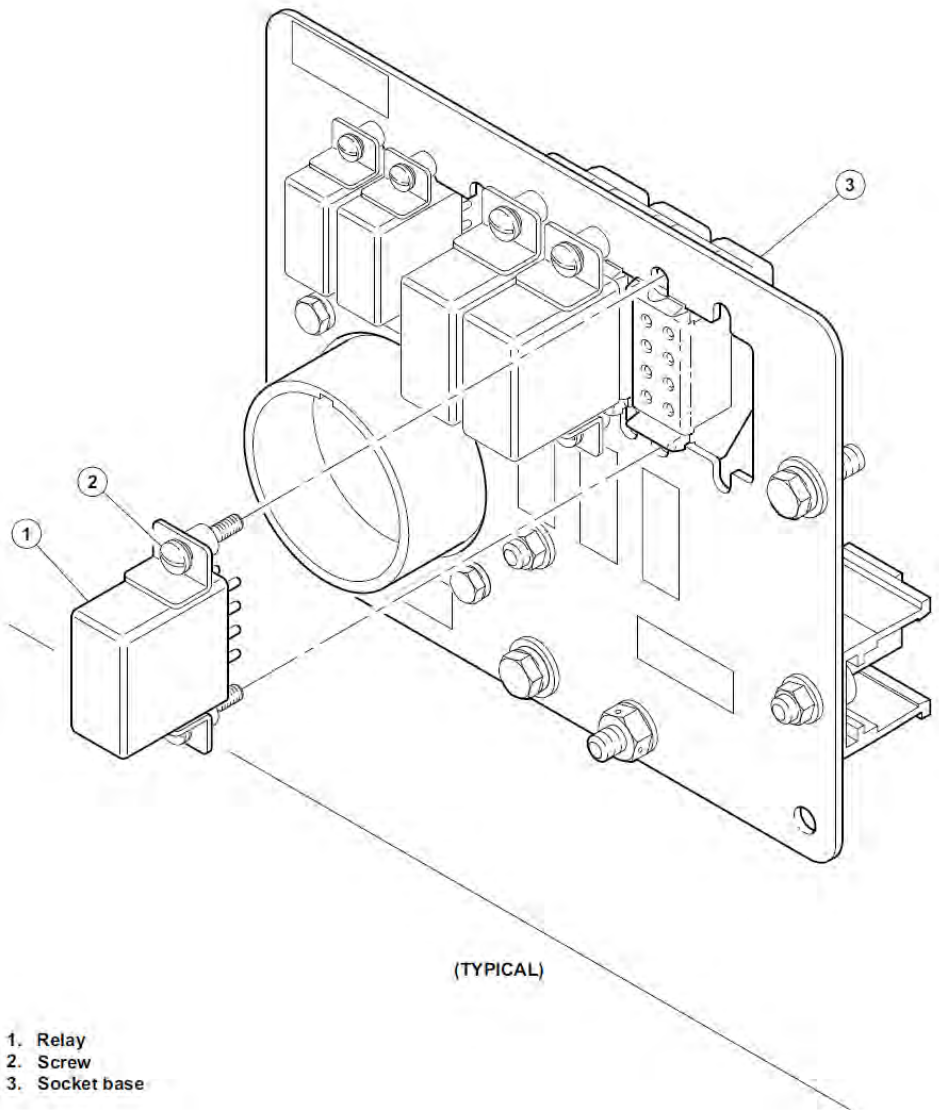

Figure 96-1. Track Mounted Relay - Removal/Installation (Typical)

• COPYRIGHT © 2023 BY EAGLE COPTERS MAINTENANCE LTD •
THIS DOCUMENT IS PRIVATE AND CONFIDENTIAL AND IS SUPPLIED ON THE EXPRESS CONDITION THAT IT IS NOT TO BE USED FOR ANY PURPOSE OR COPIED OR COMMUNICATED TO ANY OTHER PERSON WITHOUT WRITTEN PERMISSION FROM EAGLE COPTERS MAINTENANCE LTD.

CHAPTER 96 – ELECTRICAL SYSTEM (96-00-00)

96.1.20 Miscellaneous Electrical Components - Repair

95.1.20.1 Tighten loose terminal connectors, mounting, and attachments of electrical components.

95.1.20. Replace miscellaneous electrical components that fail to meet inspection requirements.

96.1.21 Miscellaneous Electrical Components - Installation

96.1.21.1 Disconnect the battery.

96.1.21.2 Make sure all of the other sources of DC power are disconnected.

96.1.21.3 Do a general visual inspection of the immediate area where the component was removed. See Miscellaneous Electrical Components Inspection (paragraph 96.1.19) for inspection requirements.

96.1.21.4 Use the correct hardware and install the component.

96.1.21.5 Remove the caps and/or plugs (C-136) or caps and/or plugs (C-156) from the connectors and tape from the ends of the wires. Use the applicable wiring diagram in Chapter 98 and attach the connectors or the wires to the proper location or terminals.

96.1.21.6 Do the applicable operational check of the system.

96.1.21.7 Return the helicopter to the flight configuration after electrical maintenance or repairs.

96.2 CONTROL PANELS - ELECTRICAL

Controls and control panels are mounted in the overhead console, pedestal and instrument panel.

96.2.1 Removal – Control Panels

NOTE

Removal procedure for all panels is relatively the same. A single removal procedure may be used for any panel.

96.2.1.1 Remove all electrical power.

96.2.1.2 Disengage fasteners securing panel to mount.

96.2.1.3 Carefully lift panel from mount and disconnect electrical connector.

96.2.2 Inspection – Control Panels

Visually inspect for scratched, chipped or broken edge and internally lit panels, loose wiring connections, damaged connector, corrosion and broken or missing fasteners.

96.2.3 Installation – Control Panels

96.2.3.1 Connect electrical connector.

96.2.3.2 Position panel in mount, being careful not to damage wiring.

96.2.3.3 Engage fasteners.

96.2.4 Circuit Breakers

There is one type of circuit breaker used on Eagle Single helicopters, the fault clearing push-pull type. Circuit breakers are mounted on the overhead console, pedestal, nose compartment and throughout the helicopter.

Circuit breakers are electromagnetic devices that protect the electrical circuit and equipment by automatically opening the electrical circuit when the current in the line exceeds a predetermined value.

• COPYRIGHT © 2023 BY EAGLE COPTERS MAINTENANCE LTD •
THIS DOCUMENT IS PRIVATE AND CONFIDENTIAL AND IS SUPPLIED ON THE EXPRESS CONDITION THAT IT IS NOT TO BE USED FOR ANY PURPOSE OR COPIED OR COMMUNICATED TO ANY OTHER PERSON WITHOUT WRITTEN PERMISSION FROM EAGLE COPTERS MAINTENANCE LTD.

CHAPTER 96 – ELECTRICAL SYSTEM (96-00-00)

96.2.5 Removal – Circuit Breakers

WARNING

BEFORE YOU REMOVE A CIRCUIT BREAKER ON THE HELICOPTER, REMOVE ALL ELECTRICAL POWER AND DISCONNECT THE BATTERY. IF NOT ACCOMPLISHED, YOU MAY CAUSE ELECTRICAL SHOCK TO PERSONS AND/OR DAMAGE TO EQUIPMENT.

96.2.5.1 Remove all electrical power.

NOTE

To assist with reinstallation, it is recommended that the wires and bus bars be identified for their installed location and orientation prior to removal.

96.2.5.2 Gain access to circuit breaker wiring.

96.2.5.3 Tap wires and disconnect

96.2.5.4 Protect wires.

96.2.5.5 Remove screw securing circuit breaker to bus bar (if required).

96.2.5.6 Remove nut and washer securing circuit breaker to panel.

96.2.5.7 Remove circuit breaker from panel.

96.2.6 Inspection – Circuit Breakers

Inspect circuit breakers for secure mounting, corrosion, general condition, power on and off actuation, and reset retention.

96.2.7 Repair/Replacement – Circuit Breakers

Replace circuit breakers if inspection requirements cannot be met.

96.2.8 Installation – Circuit Breakers

WARNING

BEFORE YOU REMOVE A CIRCUIT BREAKER ON THE HELICOPTER, REMOVE ALL ELECTRICAL POWER AND DISCONNECT THE BATTERY. IF NOT ACCOMPLISHED, YOU MAY CAUSE ELECTRICAL SHOCK TO PERSONS AND/OR DAMAGE TO EQUIPMENT.

96.2.6.1 Position breaker in structure and secure with hardware.

96.2.6.2 Install screw securing circuit breaker to bus bar (if required).

96.2.6.3 Remove tags and install wires.

96.2.6.4 Perform circuit operational check.

96.2.7 Semiconductor Devices

The semiconductor devices used are as follows:
- standard and zener diodes
- transient suppression diode assemblies
- transistors

96.2.8 Semiconductor Devices - Maintenance Practices

96.2.8.1 Remove the semiconductor device.

NOTE

Refer to Electrical Standard Practices Manual (BHT-ELEC-SPM) for detailed information of testing and troubleshooting semiconductor devices.

96.2.8.2 Inspect the semiconductor device.

NOTE

When you install a semiconductor device, refer to the associated wiring diagram to make sure of the correct orientation and wiring attachment.

96.2.8.3 Install the semiconductor device

• COPYRIGHT © 2023 BY EAGLE COPTERS MAINTENANCE LTD •
THIS DOCUMENT IS PRIVATE AND CONFIDENTIAL AND IS SUPPLIED ON THE EXPRESS CONDITION THAT IT IS NOT TO BE USED FOR ANY PURPOSE OR COPIED OR COMMUNICATED TO ANY OTHER PERSON WITHOUT WRITTEN PERMISSION FROM EAGLE COPTERS MAINTENANCE LTD.

96.2.8.4 Return the helicopter to flight configuration after electrical maintenance or repairs.

96.2.9 Track Mounted Relays

Track mounted relays are electromagnetic switches that open and close under the control of other components in the electrical circuit.

96.2.10 Track Mounted Relays - Removal

96.2.10.1 Disconnect the battery and external power from the helicopter.

96.2.10.2 Loosen the screws (2, Figure 96-1).

96.2.10.3 Carefully pull the relay (1) out of the socket base (3).

96.2.11 Track Mounted Relays - Cleaning

MATERIALS REQUIRED

NUMBER	NOMENCLATURE
C-385	Isoproyl Alcohol
C-516	Clean Cloth
C-552	Butyl Acetate

96.2.11.1 Clean relay pins with isopropyl alcohol (C-385) and if necessary to do a deep cleaning use butyl acetate (C-552).

96.2.11.2 Dry pins and surfaces with a clean cloth (C-516). Turn relay sockets down and let solvent evaporate/dry for 20 minutes.

96.2.12 Track Mounted Relays - Inspection

96.2.12.1 For the inspection of the track mounted relay refer to paragraph 96.1.19.

96.2.13 Track Mounted Relays - Installation

96.2.13.1 Correctly position the relay (1, Figure 96-1) on the socket base (3) and apply finger pressure until it latches into place.

96.2.13.2 Tighten screws (2).

96.2.13.3 Connect the battery and the external power.

96.2.13.4 Do the applicable operational check of the system.

96.3 DC POWER SYSTEMS

96.3.1 DC Power Systems

DC power systems include the battery, external power, starter, igniter, and generator systems.

96.3.2 Battery

The battery is provided for engine starting and as the backup DC source in an emergency. The battery circuit is actuated by selecting the battery switch to ON. The Essential Busses will be powered provided the following conditions are met:

96.3.2.1 Close the No.1 ESS BUS FEEDER circuit breakers on the BUS No.1 circuit breaker panel.

96.3.2.2 Close the No.2 ESS BUS FEEDER circuit breakers on the BUS No.2 circuit breaker panel.

NOTE

Non-essential busses may be powered by battery voltage after essential busses are energized by placing NON ESS BUS switch to MANUAL The dual voltmeter will indicate Battery voltage when the # 1 DC Voltmeter circuit breaker is closed.

• COPYRIGHT © 2023 BY EAGLE COPTERS MAINTENANCE LTD •
THIS DOCUMENT IS PRIVATE AND CONFIDENTIAL AND IS SUPPLIED ON THE EXPRESS CONDITION THAT IT IS NOT TO BE USED FOR ANY PURPOSE OR COPIED OR COMMUNICATED TO ANY OTHER PERSON WITHOUT WRITTEN PERMISSION FROM EAGLE COPTERS MAINTENANCE LTD.

CHAPTER 96 – ELECTRICAL SYSTEM (96-00-00)

96.3.3 Battery Servicing

MATERIALS REQUIRED

NUMBER	NOMENCLATURE
C-237	Varnish, Alkaline Resistant
	Sodium Bicarbonate

96.3.3.1 Clean battery and battery compartment as follows:

CAUTION

DO NOT USE A WIRE BRUSH. VERIFY VENT PLUGS ARE CLOSED BEFORE CLEANING AND BATTERY IS COMPLETELY DRY BEFORE RETURNING TO USE

96.3.3.1.1 Clean battery with a dry, stiff fiber brush.

96.3.3.1.2 Verify battery compartment is clean and free of corrosion. If corrosion is present, remove with diluted sodium bicarbonate solution. Retouch varnished surfaces, if necessary, with alkali-resistant varnish (C-237).

NOTE

Do not service battery while installed. The battery shall be removed and serviced every 100 hours by authorized battery shop personnel only. Refer to battery vendor manual for servicing requirements.

96.3.4 Removal – Battery

96.3.4.1 Set BATTERY switch to OFF and ensure external power is not applied. Open nose compartment door.

96.3.4.2 Disconnect battery cable connector by turning knob counterclockwise.

96.3.4.3 Disconnect two vent tubes from battery case.

96.3.4.4 Open tiedown clamps and disengage rods from battery cover. Lift battery from compartment.

96.3.4.5 Close nose compartment door.

NOTE

Replace battery if inspection requirements are not met. Repair of battery should be accomplished in an authorized battery repair station.

96.3.5 Inspection – Battery

96.3.5.1 Loosen connections at disconnects or between cells.

WARNING

THE ELECTROLYTE IS A STRONG ACID SOLUTION, HARMFUL TO HANDS OR CLOTHING. USE A SOLUTION OF SODIUM BICARBONATE TO NEUTRALIZE SPILLED ELECTROLYTE. FLUSH THOROUGHLY WITH WATER

96.3.5.2 Check electrolyte for proper level.

96.3.5.3 Check for clogged or blocked vent plugs and tubes.

96.3.5.4 Check for damage to individual cell cases (distortion due to overcharge, cracks or leaks).

96.3.6 Installation – Battery

96.3.6.1 Open compartment door.

• COPYRIGHT © 2023 BY EAGLE COPTERS MAINTENANCE LTD •
THIS DOCUMENT IS PRIVATE AND CONFIDENTIAL AND IS SUPPLIED ON THE EXPRESS CONDITION THAT IT IS NOT TO BE USED FOR ANY PURPOSE OR COPIED OR COMMUNICATED TO ANY OTHER PERSON WITHOUT WRITTEN PERMISSION FROM EAGLE COPTERS MAINTENANCE LTD.

96.3.6.2 Place battery on shelf, aligned for connections. Engage tiedown rods to strap on cover. Secure and lockwire.

96.3.6.3 Connect vent tubes to battery case and tighten clamps.

96.3.6.4 Insert cable connector in battery receptacle and secure by turning knob clockwise.

96.3.6.5 Check for voltmeter indication when BATTERY switch is ON. Set switch to OFF. Close compartment door.

96.3.7 Operational Check – Battery System

Perform the following tests using installed 24 VDC battery as power source, or an external 24 VDC power supply connected to the battery connector:

96.3.7.1 Before connecting battery, open all circuit breakers, and set all switches to OFF or NORMAL position. Ensure an open circuit exists between positive terminals of quick-disconnect and ground.

96.3.7.2 Check battery connections for tightness and correct polarity.

96.3.7.3 Perform the following tests:

96.3.7.3.1 Connect battery, or external power source, to power cables at battery quick-disconnect. Close the BUS BATT SW circuit breaker. Set BATT SW to ON. With a voltmeter, verify battery voltage is present on Main DC Bus.

96.3.7.3.2 Close the No.1 DC BUS voltmeter circuit breaker. Verify dual voltmeter indicate zero.

96.3.7.3.3 Close both No.1 ESS BUS FEEDER circuit breakers and the DC BUS 1 VOLTMETER circuit breaker. Verify the dual voltmeter reads battery voltage. Verify, with a voltmeter that there is no voltage present on the No.2 ESS BUSS FEEDER.

96.3.7.3.4 Close both No.2 ESS BUS FEEDER circuit breakers and verify, with a voltmeter, that battery voltage is present on the No.2 ESS BUS FEEDER.

96.3.7.3.5 Open both No.1 ESS BUS FEEDER circuit breakers and verify the dual voltmeter indicates zero and battery voltage is still present on the No.2 ESS BUS FEEDER.

96.3.7.3.6 Close both No.1 ESS BUS FEEDER circuit breakers and the NON-ESS BUS CONT circuit breaker. Ensure that the NON-ESS BUS switch is in NORMAL. With a voltmeter, verify that no voltage is present on the non-essential bus.

96.3.7.3.7 Select the NON-ESS BUS switch to MANUAL and verify voltage is present on the non-essential bus.

96.3.7.3.8 Open both No.2 ESS BUS FEEDER circuit breakers and verify voltage is still present on the non-essential bus.

96.3.7.3.9 Open both No.1 ESS BUS FEEDER circuit breakers and verify no voltage is present on the non-essential bus.

96.3.7.3.10 Turn BATTERY switch to OFF.

96.3.7.3.11 Return all switches to their OFF or NORMAL position and reset all circuit breakers.

96.3.8 External Power

External power may be connected to the electrical system through the external power receptacle. The BATTERY switch must be placed in the ON position (even if no battery is connected) to connect external power to the helicopter. If external power connections are of the correct polarity, the external power relay closes automatically and connects the ground unit to the Battery Bus. If polarity is not correct, no action occurs. No.1 and No.2 DC Essential Busses may be energized by closing all of the ESS BUS FEEDER circuit breakers (4). The Non-essential Bus may be energized by placing the NON-ESS BUS switch to MANUAL.

• COPYRIGHT © 2023 BY EAGLE COPTERS MAINTENANCE LTD •
THIS DOCUMENT IS PRIVATE AND CONFIDENTIAL AND IS SUPPLIED ON THE EXPRESS CONDITION THAT IT IS NOT TO BE USED FOR ANY PURPOSE OR COPIED OR COMMUNICATED TO ANY OTHER PERSON WITHOUT WRITTEN PERMISSION FROM EAGLE COPTERS MAINTENANCE LTD.

NOTE

This allows complete checkout of all equipment or other ground operations to be performed. Electrical equipment will not be protected from over-voltage conditions when operating on external power unless the external power source used provides this protection.

96.3.9 Removal – External Power Receptacle

96.3.9.1 Ensure all electrical power is OFF

96.3.9.2 Remove nuts and washers from terminal posts of receptacle. Identify and remove wires from receptacle.

96.3.9.3 Protect removed wire ends with electrical tape.

96.3.9.4 Remove mount screws and lift receptacle from bracket.

96.3.10 Installation – External Power Receptacle

96.3.10.1 Ensure all electrical power is OFF.

96.3.10.2 Position receptacle on bracket and install mounting screws.

96.3.10.3 Remove protective cover from wires and connect to respective terminals using existing hardware.

96.3.10.4 Perform operational checks.

96.3.11 Operational Check – External Power Receptacle

NOTE

Before connecting external power, Open all circuit breakers and set All switches to OFF or NORMAL.

96.3.11.1 Visually check wiring of external power receptacle for correct polarity and terminations.

96.3.11.2 Apply 28 VDC reverse polarity (positive side to aircraft structure) between small pin on external power receptacle and airframe structure. Verify external power relay does not close. Remove 28 VDC.

96.3.11.3 Perform operational check as follows:

96.3.11.3.1 Connect external DC power source to external power receptacle, energize and adjust to 28 ± 0.5 VDC. With a voltmeter, verify external power source voltage is present on Battery Bus and the dual voltmeter indicates zero.

96.3.11.3.2 Set the BATTERY switch to ON, close No.1 DC BUS voltmeter and all ESS BUS FEEDER circuit breakers. Verify the dual voltmeter indicates external power source voltage.

96.3.11.3.3 De-energize external power source. Verify dual voltmeters indicate zero.

96.3.12 Starter/Generator

The starter/generator is located on the underside of the engine to the right of the helicopter center line. The starter/generator is used to start the engine, charge the battery, and supply helicopter DC power during normal operation.

96.3.13 Removal – Starter/Generator

96.3.13.1 Ensure all electrical power is removed.

96.3.13.2 Open engine cowling to gain access to the starter/generator.

96.3.13.3 Disconnect electrical wires from the starter/generator.

96.3.13.4 Remove nuts attaching the starter/generator at the engine mounting pad adapter and remove the starter/generator.

• COPYRIGHT © 2023 BY EAGLE COPTERS MAINTENANCE LTD •
THIS DOCUMENT IS PRIVATE AND CONFIDENTIAL AND IS SUPPLIED ON THE EXPRESS CONDITION THAT IT IS NOT TO BE USED FOR ANY PURPOSE OR COPIED OR COMMUNICATED TO ANY OTHER PERSON WITHOUT WRITTEN PERMISSION FROM EAGLE COPTERS MAINTENANCE LTD.

CHAPTER 96 – ELECTRICAL SYSTEM (96-00-00)

96.3.13.5 Protect wire ends and terminals.

96.3.14 Installation – Starter/Generator

96.3.14.1 Clean splines of starter/generator and drive splines in power plant with PD-680 solvent. Pack drive splines with Multi-Fax EP-2 or Plastilube Moly No.3.

96.3.14.2 Position the starter/generator on the engine mounting pad adapter and engage the splines shaft with the drive shaft.

96.3.14.3 Secure the starter/generator to the engine mounting pad adapter using the adapter rings and attaching nuts.

96.3.14.4 Remove protective covering from wires and terminals and connect wires to the starter/generator.

96.3.14.5 Close and secure engine cowling.

96.3.15 Replacement – Starter/Generator Brushes

96.3.15.1 Check the overall length of the brushes.

96.3.15.2 Replace brushes when the overall length is less than 0.79 inches. This is indicated when the diagonal line extends less than one third of the length across the brush. (Refer to Figure 96-2).

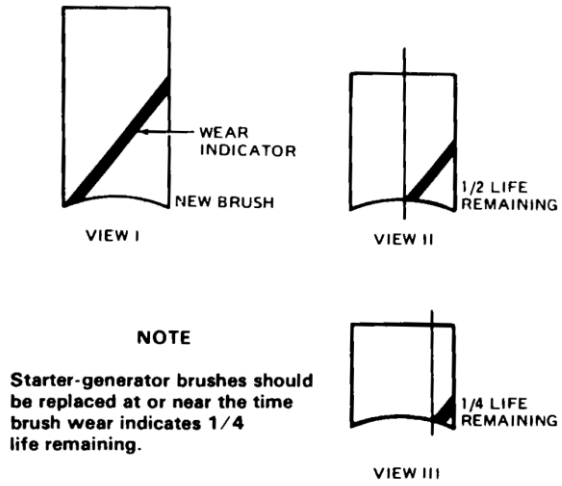

Figure 96-2. Starter/Generator Brush Wear

96.3.16 Operational Check – Starter/Generator

CAUTION

DO NOT SET GENERATOR SWITCH TO ON UNTIL SPECIFIED IN THE FOLLOWING PROCEDURES

96.3.16.1 Remove access panel located underneath the nose of the helicopter, for access to electrical components and circuitry.

96.3.16.2 Perform operational check as follows:

96.3.16.2.1 Set GEN and BATTERY switches to OFF. Remove all electrical power from buses.

96.3.16.2.2 Connect one end of a 3-foot length of aircraft wire to load side of a DC type 5-ampere circuit breaker. Connect bus side of circuit breaker to terminal A1 (generator side) of battery relay. Leave other end of wire disconnected but protected from accidental short. Ensure 5-ampere breaker is open.

96.3.16.2.3 Make normal start of engine. Either battery or external 28 VDC power source

• COPYRIGHT © 2023 BY EAGLE COPTERS MAINTENANCE LTD •
THIS DOCUMENT IS PRIVATE AND CONFIDENTIAL AND IS SUPPLIED ON THE EXPRESS CONDITION THAT IT IS NOT TO BE USED FOR ANY PURPOSE OR COPIED OR COMMUNICATED TO ANY OTHER PERSON WITHOUT WRITTEN PERMISSION FROM EAGLE COPTERS MAINTENANCE LTD.

may be used for starting. Bring generator to normal operating speed, but do not close GEN switch. Energize minimum equipment necessary for normal starting and ground run. Insert voltmeter probes into VOLTAGE-SET jacks on DC control unit observing correct polarity. Verify voltmeter indicates normal generator voltage (27 to 28 volts).

96.3.16.2.4 Close 5-ampere circuit breaker and set GEN switch to ON. Momentarily short loose end of wire on 5-ampere circuit breaker to ground. Remove short and verify voltmeter is reading approximately zero. Verify DC GENERATOR caution light illuminates.

96.3.16.2.5 Set GEN switch to RESET and then to OFF. Verify voltmeter indicates generator output voltage.

96.3.16.2.6 Set GEN switch to ON. Verify DC GENERATOR caution light extinguishes and that both dual voltmeters indicate generator voltage (DC side).

NOTE

The dual voltmeter may indicate approximately one volt below voltage regulator setting.

96.3.16.2.7 Momentarily energize a load supplied by No.1 essential DC bus, such as landing light. Verify loadmeter reads upscale.

96.3.16.2.8 Set GEN switch to OFF. Verify DC GENERATOR caution light illuminates.

96.3.16.2.9 Remove voltmeter connections from VOLTAGE-SET jacks of DC control unit. Remove electrical power from all buses. Remove added wire and circuit breaker from terminal A1 of battery relay. Replace voltage setting protective cover.

96.3.17 Operational Check – Voltage Control Adjustment

SPECIAL TEST EQUIPMENT

TYPE OR MODEL	NOMENCLATURE
Fluke Model 85 or equivalent	Digital Multimeter

Perform adjustment only after completing operational check of generator system.

CAUTION

DO NOT DISCONNECT OR RECONNECT CABLE TO CONTROL UNIT WHEN GENERATOR IS ROTATING. THIS MAY CAUSE DAMAGE TO CONTROL UNIT

NOTE

Do not place GENERATOR switch to ON until specified in the following steps.

96.3.17.1 P/N 51539-XXXX DC Control Units

NOTE

The following procedure only applies to aircraft equipped with DC Control Units p/n 51539-002N and 51539-002R.

96.3.17.1.1 Close circuit breakers required for engine starting and ground run. Start engine. Increase engine speed and maintain speed of engine so speed of gas producer is 71% N1 or greater.

96.3.17.1.2 Set GEN switch to RESET and then to OFF. Measure voltage at DC control unit test jacks (Figure 96-3). If necessary, adjust control unit for required voltage as follows:

• COPYRIGHT © 2023 BY EAGLE COPTERS MAINTENANCE LTD •
THIS DOCUMENT IS PRIVATE AND CONFIDENTIAL AND IS SUPPLIED ON THE EXPRESS CONDITION THAT IT IS NOT TO BE USED FOR ANY PURPOSE OR COPIED OR COMMUNICATED TO ANY OTHER PERSON WITHOUT WRITTEN PERMISSION FROM EAGLE COPTERS MAINTENANCE LTD.

Table 96-5. Max Seasonal Temperature

SEASONAL TEMPERATURE	VOLTAGE SETTING
Maximum daily ambient temperature does not exceed 58° F (14° C)	28.0 ± 0.1 V
Maximum daily ambient Temperature exceeds 58° F (14° C)	27.0 ± 0.1 V

96.3.17.2 P/N 51530-006B DC Control Units

NOTE
The following procedure only applies to aircraft equipped with DC Control Units p/n 51530-006B.

96.3.17.2.1 Close circuit breakers required for engine starting and ground run. Start engine. Increase engine speed and maintain speed of engine so speed of gas producer is 71% N1 or greater.

96.3.17.2.2 Set GEN switch to RESET then to ON. Measure voltage between generator side of BATT relay and aircraft ground. If necessary, adjust control unit voltage per Table 96-5.

96.3.17.2.3 After voltage adjustment, test system using GCU TEST switch. Place GCU TEST switch in OVERVOLTAGE position and verify DC GENERATOR light illuminates on Master Caution Panel. Return GCU TEST switch to center position, move GEN switch to RESET then ON and verify that DC GENERATOR light extinguishes.

96.3.17.2.4 Place GCU TEST switch in OVERLOAD position and verify that DC GENERATOR light illuminates on Master Caution Panel. Return GCU TEST switch to center position, move GEN switch to RESET then ON and verify that DC GENERATOR light extinguishes.

96.3.18 Operational Check – Non-Essential Buss

Operational check of nonessential bus system should be performed immediately after completing voltage control adjustment (paragraph 96.3.17).

96.3.18.1 Close NON-ESS BUS circuit breaker. Set NON-ESS switch to MANUAL. Check for 28 VDC on non-essential bus in overhead console.

96.3.18.2 Set NON-ESS BUS switch to NORMAL. Check for 28 VDC on non-essential bus in overhead console.

96.3.18.3 Set GEN switch to OFF. Verify DC GENERATOR caution light on caution panel is illuminated. Check for zero volts on non-essential bus.

96.3.18.4 Set NON-ESS BUS switch to MANUAL. Check for 28 VDC on non-essential bus.

96.3.18.5 Set GEN switch to ON. Verify DC GENERATOR caution light on caution panel is extinguished. Check for 28 VDC on non-essential bus.

96.3.18.6 Set NON-ESS BUS switch to NORMAL. Check for 28 VDC volts on non-essential bus.

• COPYRIGHT © 2023 BY EAGLE COPTERS MAINTENANCE LTD •
THIS DOCUMENT IS PRIVATE AND CONFIDENTIAL AND IS SUPPLIED ON THE EXPRESS CONDITION THAT IT IS NOT TO BE USED FOR ANY PURPOSE OR COPIED OR COMMUNICATED TO ANY OTHER PERSON WITHOUT WRITTEN PERMISSION FROM EAGLE COPTERS MAINTENANCE LTD.

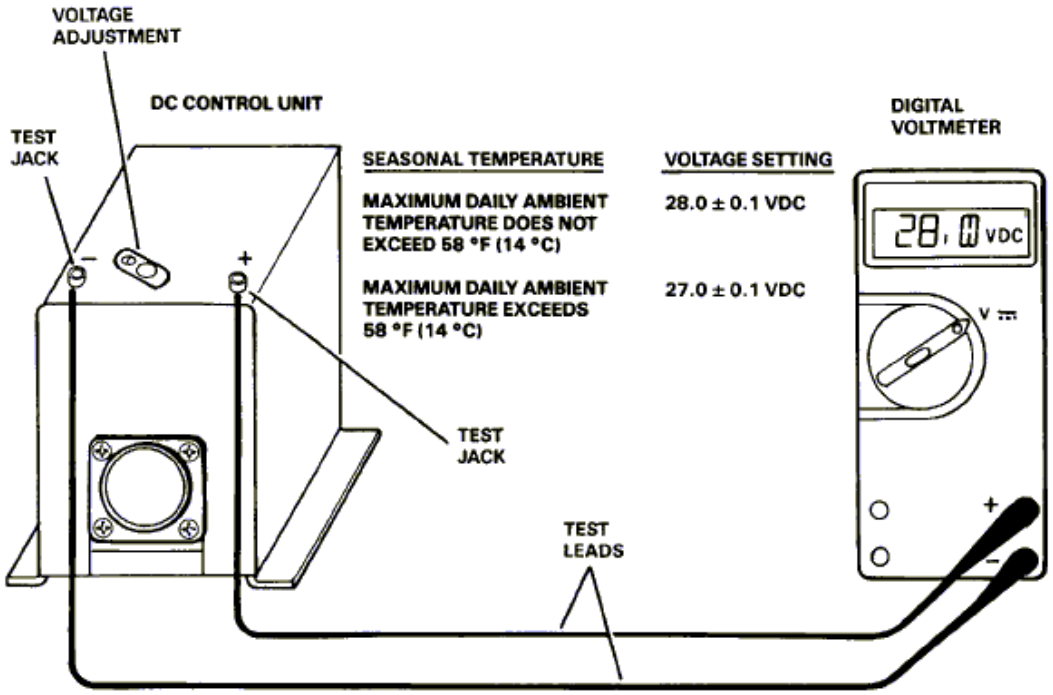

Figure 96-3. Voltage Control Adjustment

96.3.19 Power Diode Functional Checkout Procedure

Perform diode functional checkout procedures when loss of No.1 or No.2 DC essential bus occurs due to tripping of power circuit breakers or when power diode short circuit or power diode open circuit is suspected. Power diode functional checkout is also required during scheduled inspection (Chapter 5). Power diodes incorporated in BUS 1 and BUS 2 FEEDER circuits consists of diodes CR30, CR31, CR32, and CR33, refer to Wire Diagram Figure 98-11 for electrical bus wiring schematic and Wire Diagram Figure 98-10 for DC generator wiring diagram.

SPECIAL TEST EQUIPMENT

TYPE OR MODEL	NOMENCLATURE
Fluke Model 85 or equivalent	Digital Multimeter

96.3.19.1 Refer to Table 96-6 and Figure 96-4 and perform diode functional checkout procedures.

96.3.19.2 Replace defective diodes, wiring or components identified during checkout procedures.

Note: Instructions (Refer to Figure 96-4)

96.3.19.3 Position all switches not listed below in OFF or NORMAL position and close all circuits not listed below.

96.3.19.4 Perform tests A through E.

96.3.19.5 Replace all diodes found to be open or shorted.

• COPYRIGHT © 2023 BY EAGLE COPTERS MAINTENANCE LTD •
THIS DOCUMENT IS PRIVATE AND CONFIDENTIAL AND IS SUPPLIED ON THE EXPRESS CONDITION THAT IT IS NOT TO BE USED FOR ANY PURPOSE OR COPIED OR COMMUNICATED TO ANY OTHER PERSON WITHOUT WRITTEN PERMISSION FROM EAGLE COPTERS MAINTENANCE LTD.

Table 96-6. Power Diode Functional Checkout Procedures.

	CIRCUIT BREAKERS AND SWITCHES	A	B	C	D	E
1	BATTERY switch	ON	ON	ON	ON	ON
2	NONESS BUS switch (OFF=NORMAL)	OFF	OFF	OFF	OFF	OFF
3	Pilot side No.2 ESS BUS FEEDER circuit breaker (inboard)	Open	Close	Open	Open	Open
4	Pilot side No.2 ESS BUS FEEDER circuit breaker (outboard)	Open	Open	Open	Close	Open
5	Copilot side No.1 ESS BUS FEEDER circuit breaker (inboard)	Open	Open	Open	Open	Close
6	Copilot side No.1 ESS BUS FEEDER circuit breaker (outboard)	Open	Open	Close	Open	Open
	MONITOR	RESULTS NECESSARY FOR PROPER OPERATION				
	DC Voltmeter No.1	0VDC	0VDC	+VDC	0VDC	+VDC
	External Voltmeter(Connected to No.2 ESS BUS FEEDER)	0VDC	+VDC	0VDC	+VDC	0VDC

NOTE: Tests are designed for main battery only.

TEST PURPOSE

Initial setting with power on.
Ensure no open circuit at CR30 diode.
Ensure no open circuit at CR31 diode.
Ensure no open circuit at CR32 diode
Ensure no open circuit at CR33 diode

• COPYRIGHT © 2023 BY EAGLE COPTERS MAINTENANCE LTD •
THIS DOCUMENT IS PRIVATE AND CONFIDENTIAL AND IS SUPPLIED ON THE EXPRESS CONDITION THAT IT IS NOT TO BE USED FOR ANY PURPOSE OR COPIED OR COMMUNICATED TO ANY OTHER PERSON WITHOUT WRITTEN PERMISSION FROM EAGLE COPTERS MAINTENANCE LTD.

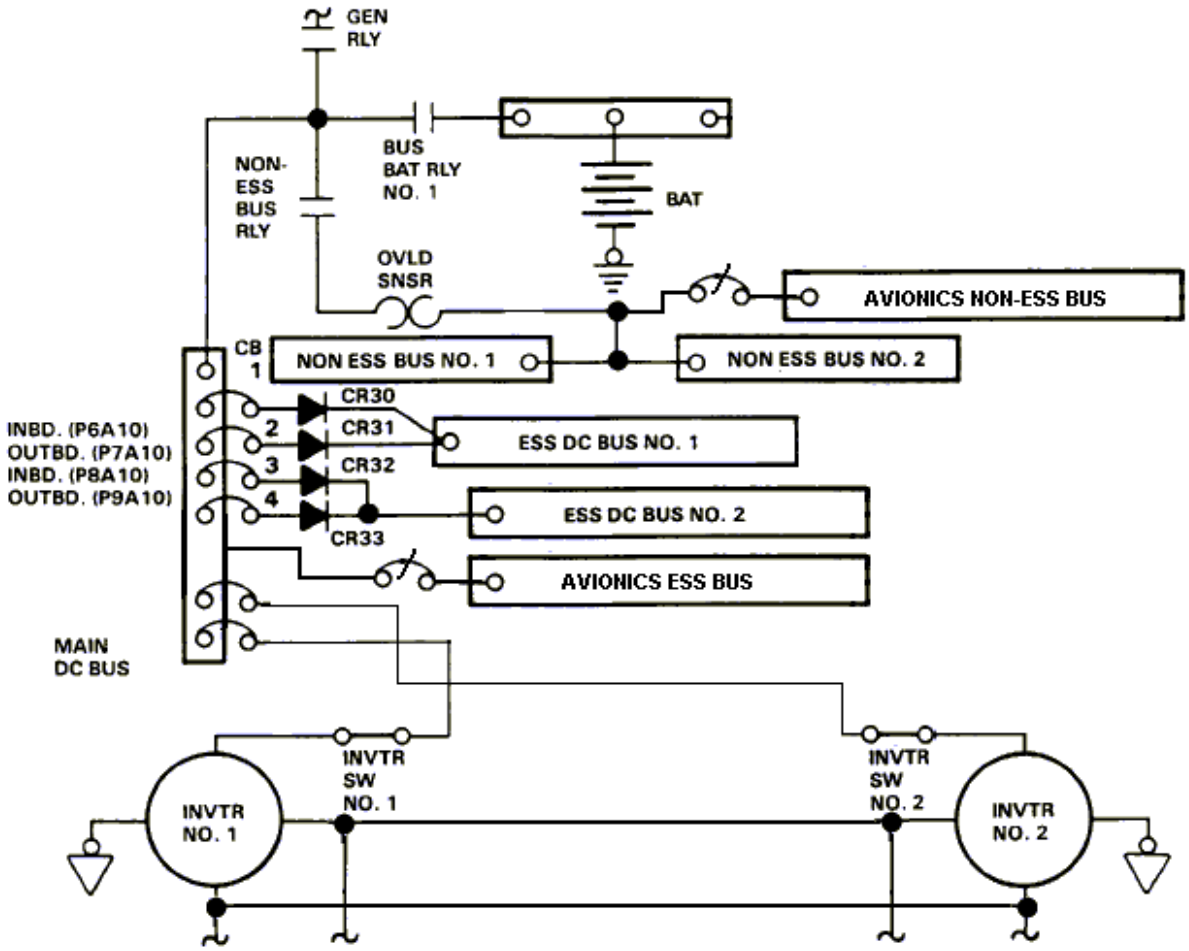

Figure 96-4. Power Diode Electrical Bus Wiring Schematic

• COPYRIGHT © 2023 BY EAGLE COPTERS MAINTENANCE LTD •
THIS DOCUMENT IS PRIVATE AND CONFIDENTIAL AND IS SUPPLIED ON THE EXPRESS CONDITION THAT IT IS NOT TO BE USED FOR ANY PURPOSE OR COPIED OR COMMUNICATED TO ANY OTHER PERSON WITHOUT WRITTEN PERMISSION FROM EAGLE COPTERS MAINTENANCE LTD.

96.3.20 Starter and Igniter

One starter/generator is mounted on the engine. If electrical power is supplied to series (or starter) winding, starter/generator will produce rotational torque for starting the engine on which it is mounted. Start power may be from the battery installed in the helicopter or from an external 28VDC power source plugged into the external power receptacle. Starting of the engine is accomplished by closing ENG IGN SYS circuit breaker and ENG START RELAY circuit breaker. Set ENGINE FUEL switch to ON, and start switch (on pilot's collective) to START. This energizes the start control relay (K7) and the start relay (K5) which energizes the starter generator relay (K3) and also energizes the engine ignition unit (Z9). Through relay K7, current now flows through the contacts of the starter/generator relay (K3), and the start relay (K5) to the series or start winding of the starter generator.

Diodes CR72 was added to start relay K5, and diode CR79 was added to the starter/generator relay K3, to suppress transient voltage spikes.

NOTE
For starter maintenance procedures, refer to Chapter 71.

96.3.21 Operational Check – Starter and Igniter Systems

96.3.22 Starter Circuitry

96.3.22.1 Perform operational check as follows:

96.3.22.1.1 Disconnect wire P95A1 from terminal C on starter-generator and isolate from airframe structure.

96.3.22.1.2 Set BATTERY switch to ON.

96.3.22.1.3 Set START switch on pilot collective to START. Verify battery voltage is present on disconnected end of wire P94A1, no voltage is present at terminal B (wire P72A1) of starter-generator and battery voltage is present on dual voltmeter (DC side).

96.3.22.1.4 Set START switch on pilot collective to OFF. Verify no voltage is present on disconnected wire P95A1.

96.3.22.1.5 Set START switch on copilot collective (if installed) to START. Verify battery voltage is present on disconnected end of wire P94A1, no voltage is present at terminal B (wire P72A1) of starter-generator and battery voltage is present on dual voltmeter (DC side).

96.3.22.1.6 Set START switch on copilot collective (if installed) to OFF. Verify no voltage is present on disconnected wire P95A1.

96.3.22.1.7 Turn electric power off.

96.3.22.1.8 Reconnect wire P95A1 to terminal C on starter-generator.

96.3.23 Engine Ignition Unit

96.3.23.1 Disconnect connector from engine ignition unit.

96.3.23.2 Open STARTER circuit breaker.

96.3.23.3 Set BATTERY switch to ON.

96.3.23.4 Set START switch on pilot collective to START. Verify no voltage is present between pin A and ground.

96.3.23.5 Set ENGINE FUEL switch to ON. Verify battery voltage is present between pin A and ground.

96.3.23.6 Set START switch on pilot collective to OFF. Verify no voltage is present between pin A and ground.

96.3.23.7 Set ENGINE FUEL switch to OFF.

96.3.23.8 Set START switch on copilot collective (if installed) to START. Verify no voltage is present between pin A and ground.

• COPYRIGHT © 2023 BY EAGLE COPTERS MAINTENANCE LTD •
THIS DOCUMENT IS PRIVATE AND CONFIDENTIAL AND IS SUPPLIED ON THE EXPRESS CONDITION THAT IT IS NOT TO BE USED FOR ANY PURPOSE OR COPIED OR COMMUNICATED TO ANY OTHER PERSON WITHOUT WRITTEN PERMISSION FROM EAGLE COPTERS MAINTENANCE LTD.

96.3.23.9 Set ENGINE FUEL switch to ON. Verify battery voltage is present between pin A and ground.

96.3.23.10 Set START switch on copilot collective (if installed) to OFF. Verify no voltage is present between pin A and ground.

96.3.23.11 Set ENGINE FUEL switch to OFF.

96.3.23.12 Set BATTERY switch to OFF.

96.3.23.13 Close STARTER circuit breaker.

96.3.23.14 Reconnect connector from engine ignition unit.

96.4 AC POWER SYSTEM

96.4.1 AC Power System

96.4.1.1 Alternating current (AC) power is supplied by two 115/26 VAC, 400 Hz, single phase, 250 VA, solid state inverters (PS1 & PS7). Both inverters are powered from the Main DC Buss. AC power is normally supplied by the # 1 inverter while the # 2 inverter acts as a backup and will automatically take over provided the # 2 inverter switch is in the AUTO/ON position. Caution light segments are provided for each inverter system and are connected to the AC voltage sensing relays. If installed, an inverter blower (B27) will also run any time the # 2 inverter is providing AC power.

96.4.1.2 Part numbers of inverters used in the helicopters are listed in the IPB for both inverters.

96.4.2 Inverter

96.4.2.1 Data is given for ASH584-1, -5, inverters. Data is typical of other inverters. Inverter output voltage reading will vary according to DC input and AC load of the inverter.

96.4.2.2 Input power requirements for ASH584-1, -5 inverter:

28VDC – 11.9 Amps normal at 100% load.
28VDC – 13.7 Amps at 100% load.
28VDC – 17.8 Amps at 150% load.

96.4.2.3 Output power characteristics for ASH584-1, -5 inverter:

115VAC +5%, -7% (120.75 to 106.95VAC)
26VAC +5%, -7% (27.3 to 24.18VAC)

96.4.2.4 Voltage regulator limits for ASH584-1, -5 inverter:

115VAC +5%, -7% (120.75 to 106.95VAC)
26VAC ±1.2VAC (27.2 to 24.8VAC)
Frequency 400 Hz ± 1.0%.

96.4.2.5 ASH584-1, -5 inverter delivers rated AC power output over input DC voltage range of 22 to 32 volts with nominal of 28VDC.

96.4.3 Removal – Inverters PS1 or PS7

96.4.3.1 Disconnect battery.

96.4.3.2 Ensure all electrical power is OFF.

96.4.3.3 Disconnect electrical connector and protect with cap or tape.

96.4.3.4 While supporting inverter, remove mounting bolts.

96.4.3.5 Carefully lower and remove inverter from compartment.

96.4.4 Inspection – Inverters PS1 or PS7

96.4.4.1 Cracked or damaged cases could impair proper operation of the inverter.

96.4.4.2 Check for proper bonding and mounting hardware.

96.4.4.3 Check for broken connector pins or cracked connector inserts.

• COPYRIGHT © 2023 BY EAGLE COPTERS MAINTENANCE LTD •
THIS DOCUMENT IS PRIVATE AND CONFIDENTIAL AND IS SUPPLIED ON THE EXPRESS CONDITION THAT IT IS NOT TO BE USED FOR ANY PURPOSE OR COPIED OR COMMUNICATED TO ANY OTHER PERSON WITHOUT WRITTEN PERMISSION FROM EAGLE COPTERS MAINTENANCE LTD.

CHAPTER 96 – ELECTRICAL SYSTEM (96-00-00)

96.4.5 Installation – Inverters PS1 or PS7

96.4.5.1 While supporting the inverter on its mounting pad, install and secure mounting bolts and washers.

96.4.5.2 Remove protective cap or tape from electrical connector and engage and secure connector.

96.4.5.3 Restore electrical power and perform operational check.

96.4.6 Operational Check – Inverter System and Inverter Caution Lights

96.4.6.1 Apply electrical power to the helicopter electrical system.

96.4.6.2 Set INVERTER 1 switch ON and INVERTER 2 switch to AUTO/ON (inverter blower may run for a short time). Verify INVERTER 1 and INVERTER 2 caution lights are extinguished. Use voltmeter on FUEL QTY CB to verify 115 VAC.

96.4.6.3 Open INV 1 PWR circuit breaker. Verify INVERTER 1 caution light is illuminated. Verify inverter blower runs.

96.4.6.4 Close INV 1 PWR circuit breaker. Verify results described in step 96.4.6.2 are obtained.

96.4.6.5 Open INV 2 PWR circuit breaker. Verify INVERTER 2 caution light is illuminated.

96.4.6.6 Close INV 2 PWR circuit breaker. Verify results described in step 96.4.6.2 are obtained.

96.4.6.7 Turn electric power off. Close INV 1 PWR circuit breaker. Verify results described in step 96.4.6.2 are obtained.

96.5 AC POWERED INDICATOR SYSTEMS

96.5.1 AC Powered Indicator Systems

NOTE
S/Ns 30687, 30817 and 30599 use the following AC powered indicators: Torque, Engine Oil Pressure, Transmission Oil Pressure, Hydraulic Pressure, Fuel Pressure, Fuel Quantity, Dual Tachometer and Gas Producer Tachometer.

NOTE
All S/Ns except 30687, 30817 and 30599 use the following DC powered indicators: Torque, Engine Oil Pressure, Transmission Oil Pressure, Hydraulic Pressure, Fuel Pressure, Dual Tachometer and Gas Producer Tachometer. Refer to Section 96.6 DC Indicator Systems for description, operational checks and instructions for these indicators.

NOTE
All S/Ns use an AC Fuel Quantity indication system.

NOTE
Dual tachometer and gas producer tachometer indicator systems are AC self-generating and do not require AC power from helicopter inverters.

AC powered indicator systems include torque, engine oil pressure, transmission oil pressure, hydraulic pressure, fuel quantity, dual tachometer (rotor RPM and turbine RPM), and gas producer tachometer systems.

• COPYRIGHT © 2023 BY EAGLE COPTERS MAINTENANCE LTD •
THIS DOCUMENT IS PRIVATE AND CONFIDENTIAL AND IS SUPPLIED ON THE EXPRESS CONDITION THAT IT IS NOT TO BE USED FOR ANY PURPOSE OR COPIED OR COMMUNICATED TO ANY OTHER PERSON WITHOUT WRITTEN PERMISSION FROM EAGLE COPTERS MAINTENANCE LTD.

96.5.2 Torque Indicator

NOTE

S/Ns 30687, 30817 and 30599 use an AC powered torque indicating system. For all S/Ns except 30687, 30817 and 30599 refer to Section 96.6 for details of the DC powered indicating systems.

The torque indicator system is a remote type indicating system. AC power is routed through a circuit breaker to the torque indicator and transmitter. Any pressure sensed by the torque transmitter will be indicated on the torque indicator. The copilot torque indicator system is independent of the pilot's system but functions in the same manner.

96.5.3 Operational Check and Calibration – Torque Indicator

Any time a transmitter or combining gearbox is removed or replaced for any reason an operational check should be performed to verify proper calibration.

SPECIAL TEST EQUIPMENT

TYPE OR MODEL	NOMENCLATURE
Barfield Model 2311F-S or Equivalent	Pressure Tester 0-150 psi (0-1034 KPa)

96.5.3.1 The torquemeter must be aligned to the engine installed in accordance with the torque pressure reading on the engine nameplate.

96.5.3.2 Alignment is accomplished by the following procedure:

96.5.3.2.1 Loosen the instrument clamping screw and rotate the indicator to align the white index line with the dial marking on the instrument overlay in accordance with Table 96-7 Torquemeter Alignment Chart.

96.5.3.2.2 Tighten instrument clamp screw.

Example: Engine nameplate torque pressure information is 48.5 psi. Using Table 96-7, align the instrument index line with the 10 psi mark on the overlay. Reapply the white slippage mark at the top of the instrument.

96.5.3.3 After indicator alignment, verify correct reading of the indicator by accomplishing the following:

96.5.3.3.1 Remove pressure line from "T" fitting at torque pressure transmitters (if two transmitters installed) and attach pressure tester to the transmitters.

96.5.3.3.2 Apply a pressure of 55.7 psi (corrected for tester error) and verify both pilot and copilot indicators read 55.7 ± 0.3 psi.

96.5.3.3.3 Reduce pressure and remove pressure tester from pressure transmitters.

96.5.3.3.4 Reinstall pressure line on transmitters ("T").

96.5.3.3.5 Reapply the white slippage marks to tops of instruments.

CAUTION

DO NOT EXCEED 65 PSI APPLIED PRESSURE TO TRANSMITTERS.

• COPYRIGHT © 2023 BY EAGLE COPTERS MAINTENANCE LTD •
THIS DOCUMENT IS PRIVATE AND CONFIDENTIAL AND IS SUPPLIED ON THE EXPRESS CONDITION THAT IT IS NOT TO BE USED FOR ANY PURPOSE OR COPIED OR COMMUNICATED TO ANY OTHER PERSON WITHOUT WRITTEN PERMISSION FROM EAGLE COPTERS MAINTENANCE LTD.

Table 96-7. Torquemeter Alignment Chart.

ENGINE NAMEPLATE PRESSURE	ALIGN INDEX MARK TO	ENGINE NAMEPLATE PRESSURE	ALIGN INDEX MARK TO
50.0	8.5	62.5	9.0
49.5	9.0	62.0	9.5
49.0	9.5	61.5	10.0
48.5	10.0	61.0	10.5
48.0	10.5	60.5	11.0
47.5	11.0	60.0	11.5
47.0	11.5	59.5	12.0
46.5	12.0	59.0	12.5
46.0	12.5	58.5	13.0
45.5	13.0	58.0	13.5
45.0	13.5	57.5	14.0

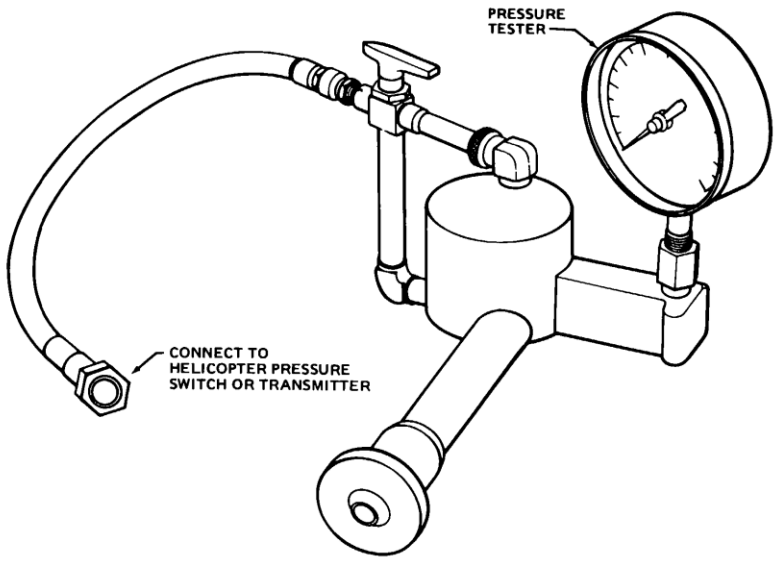

Figure 96-5. Pressure Tester

• COPYRIGHT © 2023 BY EAGLE COPTERS MAINTENANCE LTD •
THIS DOCUMENT IS PRIVATE AND CONFIDENTIAL AND IS SUPPLIED ON THE EXPRESS CONDITION THAT IT IS NOT TO BE USED FOR ANY PURPOSE OR COPIED OR COMMUNICATED TO ANY OTHER PERSON WITHOUT WRITTEN PERMISSION FROM EAGLE COPTERS MAINTENANCE LTD.

96.5.4 Engine Oil Pressure Indicator

NOTE

S/Ns 30687, 30817 and 30599 use an AC powered Engine Oil Pressure indicating system. For all S/Ns except 30687, 30817 and 30599 refer to Section 96.6 for details of the DC powered indicating systems.

The engine oil pressure indicator system is a remote type indicating system. AC power is routed through a circuit breaker to the pressure indicator and pressure transmitter. Any pressure sensed by the pressure transmitter will be indicated on the pressure indicator.

96.5.5 Operational Check – Engine Oil Pressure Indicator

SPECIAL TEST EQUIPMENT

TYPE OR MODEL	NOMENCLATURE
Barfield Model 2311F-S or Equivalent	Pressure Tester 0-150 psi. (0-1034 KPa)

96.5.5.1 On helicopter perform operational check as follows:

96.5.5.1.1 Disconnect pressure line from oil pressure transmitter on engine.

96.5.5.1.2 Attach pressure tester to the transmitter and apply 100 psig (689.5 kPa) to transmitter. Do not exceed 110 psig (758.45 kPa).

96.5.5.1.3 Apply electrical power to the helicopter electrical system. Verify ENGINE OIL pressure indicator reads 100 ± 10 psi.

96.5.5.1.4 Turn electrical power off.

96.5.5.1.5 Reduce pressure and remove pressure tester from pressure transmitter. Connect pressure line to engine oil pressure transmitter.

96.5.6 Transmission Oil Pressure Indicator

NOTE

S/Ns 30687, 30817 and 30599 use an AC powered Transmission Oil Pressure indicating system. For all S/Ns except 30687, 30817 and 30599 refer to Section 96.6 for details of the DC powered indicating systems.

The transmission oil pressure indicator system is a remote type indicating system. AC power is routed through a circuit breaker to the pressure indicator and pressure transmitter. Any pressure sensed by the pressure transmitter will be indicated on the pressure indicator.

96.5.7 Operational Check – Transmission Oil Pressure Indicator

SPECIAL TEST EQUIPMENT

TYPE OR MODEL	NOMENCLATURE
Barfield Model 2311F-S or Equivalent	Pressure Tester 0-150 psi. (0-1034 KPa)

96.5.7.1 On helicopter perform operational check as follows:

96.5.7.1.1 Disconnect pressure line from transmission oil pressure transmitter.

96.5.7.1.2 Attach pressure tester to the transmitter and apply 100 psig (689.5 KPa) pressure to transmitter. Do not exceed 110 psig (758.45 KPa).

96.5.7.1.3 Apply electrical power to the helicopter electrical system. Verify TRANSMISSION OIL pressure indicator reads 100 ± 10 psi.

96.5.7.1.4 Turn electrical power off.

96.5.7.1.5 Reduce pressure and remove pressure tester from pressure transmitter.

• COPYRIGHT © 2023 BY EAGLE COPTERS MAINTENANCE LTD •
THIS DOCUMENT IS PRIVATE AND CONFIDENTIAL AND IS SUPPLIED ON THE EXPRESS CONDITION THAT IT IS NOT TO BE USED FOR ANY PURPOSE OR COPIED OR COMMUNICATED TO ANY OTHER PERSON WITHOUT WRITTEN PERMISSION FROM EAGLE COPTERS MAINTENANCE LTD.

Connect pressure line to transmission oil pressure transmitter.

96.5.8 Hydraulic Pressure Indicator

NOTE
S/Ns 30687, 30817 and 30599 use an AC powered Hydraulic Pressure indicating system. For all S/Ns except 30687, 30817 and 30599 refer to Section 96.6 for details of the DC powered indicating systems.

The hydraulic pressure indicator system is a remote type indicating system. AC power is routed through a circuit breaker to the pressure indicator and pressure transmitter. Any pressure sensed by the pressure transmitter will be indicated on the pressure indicator. The indicator is a dual hydraulic pressure/temperature indicator type.

96.5.9 Operational Check – Hydraulic Pressure Indicator

96.5.9.1 Apply electrical power to the helicopter electrical system.

96.5.9.2 Apply external hydraulic pressure to No.1 hydraulic system. Verify with external hydraulic pressure of 800 psig (5516 KPa), No.1 hydraulic pressure indicator reads 750 to 850 psi. Repeat test with 1000 psig (6895 KPa) hydraulic pressure. Verify indicator reads 950 to 1050 psi.

96.5.9.3 Repeat steps 96.5.9.1 and 96.5.9.2 for system No.2.

96.5.9.4 Turn electrical power off.

96.5.10 Fuel Pressure Indicator

NOTE
S/Ns 30687, 30817 and 30599 use an AC powered Fuel Pressure indicating system. For all S/Ns except 30687, 30817 and 30599 refer to Section 96.6 for details of the DC powered indicating systems.

The fuel pressure indicator system is a remote type indicating system. AC power is routed through a circuit breaker to the pressure indicator and pressure transmitter. Any pressure sensed by the pressure transmitter will be indicated on the pressure indicator.

96.5.11 Operational Check – Fuel Pressure Indicator

SPECIAL TEST EQUIPMENT

TYPE OR MODEL	NOMENCLATURE
Barfield Model 2311F-S or Equivalent	Pressure Tester 0-150 psi. (0-1034 KPa)

96.5.11.1 Disconnect pressure line from fuel pressure transmitter on engine.

96.5.11.2 Attach pressure tester to the transmitter and apply 50 psig (689.5 KPa) pressure to transmitter. Do not exceed 57 psig (393 KPa).

96.5.11.3 Apply electrical power to the helicopter electrical system. Verify ENGINE FUEL pressure indicator reads 50 $\pm$ 7 psi.

96.5.11.4 Turn electrical power off.

96.5.11.5 Reduce pressure and remove pressure tester from pressure transmitter. Connect pressure line to engine fuel pressure transmitter.

96.5.12 Fuel Quantity Indicator

AC power (115VAC) is supplied through the FUEL QTY circuit breaker. Each transmitter sends a signal to the fuel quantity indicator where indication is given in total pounds of fuel. For S/N 30687, a fuel quantity selector switch allows for indication of fuel quantity as determined by the position of the switch (LEFT, TOTAL, or RIGHT). For ALL EXCEPT S/N 30687, a fuel quantity test switch has replaced the fuel quantity select

• COPYRIGHT © 2023 BY EAGLE COPTERS MAINTENANCE LTD •
THIS DOCUMENT IS PRIVATE AND CONFIDENTIAL AND IS SUPPLIED ON THE EXPRESS CONDITION THAT IT IS NOT TO BE USED FOR ANY PURPOSE OR COPIED OR COMMUNICATED TO ANY OTHER PERSON WITHOUT WRITTEN PERMISSION FROM EAGLE COPTERS MAINTENANCE LTD.

switch and allows for a confidence check of the indicator only. The indicator displays total fuel quantity at all times.

96.5.13 Insulation Resistance Test – Tank Units and System Wiring Installation

Refer to Simmonds Precision Bulletin No. TB 422 and Chapter 28.

96.5.14 Calibration- Fuel Quantity Indicator System (Preferred Method - No Fuel in Tank) - Calibration

SPECIAL TEST EQUIPMENT

TYPE OR MODEL	NOMENCLATURE
AC Capacitance Field Calibration Unit Test Set	Simmonds Precision No. PSD60-1 or Equivalent (Alternate: Barfield No. 2548-G or Equivalent)

NOTE

For more information on auxiliary fuel tank kits, refer to S.I 212-58. For additional information on fuel quantity indicating system, refer to Simmonds Precision Bulletin No. TB 422.

96.5.14.1 Make sure helicopter is defueled. (Chapter 12).

NOTE

During the following procedures, make sure the indicator remains connected.

96.5.14.2 Remove fuel quantity indicator from instrument panel.

96.5.14.3 Close FUEL QTY circuit breaker.

NOTE

Adjust the indicator so the needle is above zero and then adjust it back to the bottom of the zero graduation.

96.5.14.4 Adjust EMPTY control on back of indicator, if required, until indicator reads exactly zero.

96.5.14.5 Verify indicator pointer is stable (does not oscillate).

96.5.14.6 Open FUEL QTY circuit breaker.

96.5.14.7 Connect Field Calibration Unit to system using appropriate cabling.

96.5.14.8 Set FUEL QTY SEL switch to TOTAL.

96.5.14.9 Set tank unit capacitance decade on calibration unit for values shown in Figure 96-6.

96.5.14.10 Adjust FULL control on back of indicator until indicator reads correct full indication, and is stable.

96.5.14.11 Disconnect field calibration unit.

96.5.14.12 Return fuel system to its original configuration.

96.5.14.13 Verify all connectors are secure and tight.

96.5.14.14 Verify indicator reads zero.

96.5.15 Calibration- Fuel Quantity Indicator System (Alternate Method - Wet Tanks)

Refer to Simmonds Precision Bulletin No. 422 for calibration of fuel quantity indicator system with fuel in fuel cell.

• COPYRIGHT © 2023 BY EAGLE COPTERS MAINTENANCE LTD •
THIS DOCUMENT IS PRIVATE AND CONFIDENTIAL AND IS SUPPLIED ON THE EXPRESS CONDITION THAT IT IS NOT TO BE USED FOR ANY PURPOSE OR COPIED OR COMMUNICATED TO ANY OTHER PERSON WITHOUT WRITTEN PERMISSION FROM EAGLE COPTERS MAINTENANCE LTD.

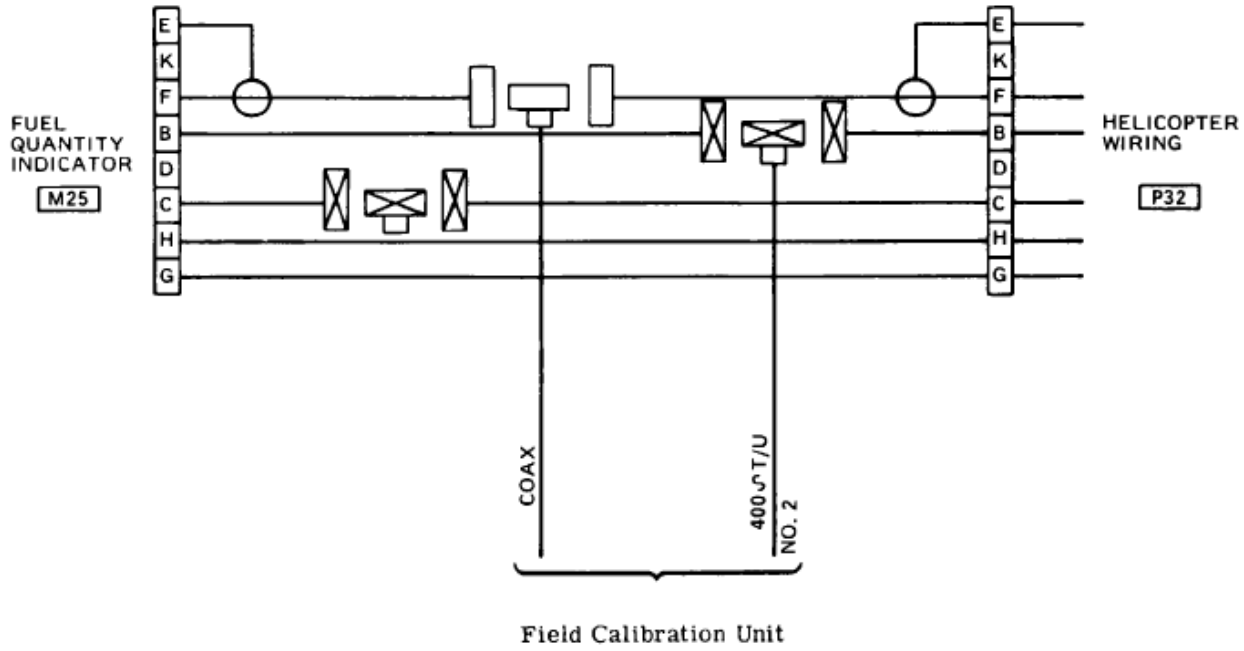

System	Indicator	Capacitance (uuf)			Full Ind Reading
		Empty (1)	Added (2)	Full (1)	
Basic	393008-040 or 393008-082	121.3	132.0	244.3	1575
	393008-036 or 393008-046	112.3	132.0	244.3	1900
	393008-037	207.8	237.3	445.1	2900
	393008-047	207.8	208.3	416.1	2500

Notes:
1) Excluding capacity of test leads
2) Including capacity of test leads

Figure 96-6. Test Setup for Fuel Quantity Indicator Calibration, Dry Tanks.

• COPYRIGHT © 2023 BY EAGLE COPTERS MAINTENANCE LTD •
THIS DOCUMENT IS PRIVATE AND CONFIDENTIAL AND IS SUPPLIED ON THE EXPRESS CONDITION THAT IT IS NOT TO BE USED FOR ANY PURPOSE OR COPIED OR COMMUNICATED TO ANY OTHER PERSON WITHOUT WRITTEN PERMISSION FROM EAGLE COPTERS MAINTENANCE LTD.

96.5.16 Dual Tachometer Indicator

NOTE
S/Ns 30687, 30817 and 30599 use an AC powered Dual Tachometer indicating system. For all S/Ns except 30687, 30817 and 30599 refer to Section 96.6 for details of the DC powered indicating systems.

The dual tachometer indicator system consists of the engine power turbine tachometer generator, rotor tachometer generator and dual tachometer indicator.

96.5.17 Operational Check – Dual Tachometer Indicator System (Rotor Rpm, Power Turbine Rpm

SPECIAL TEST EQUIPMENT

TYPE OR MODEL	NOMENCLATURE
Howell H337 or Equivalent	Engine Test Set

96.5.17.1 Disconnect connector (P35) from main rotor tachometer generator and connect to matching receptacle on test set. Energize tachometer generator on test set. Verify rotor tachometer pointers on pilot and copilot dual tachometer indicators read upscale and indicate approximate speed at which test set tachometer generator is turning.

96.5.17.2 Disconnect connector (P35) from test set and connect to rotor tachometer generator.

96.5.17.3 Disconnect connector (P111) from engine power turbine tachometer generator and connect to matching receptacle on test set. Energize tachometer generator on test set. Verify power turbine tachometer pointers on pilot and copilot dual tachometer indicators read upscale and indicate approximate speed at which test set tachometer generator is turning.

96.5.17.4 Disconnect connector (P111) from test set and connect to power turbine tachometer generator on engine.

96.5.18 Gas Producer Tachometer Indicator

NOTE
S/Ns 30687, 30817 and 30599 use an AC powered Gas Producer Tachometer indicating system. For all S/Ns except 30687, 30817 and 30599 refer to Section 96.6 for details of the DC powered indicating systems.

The gas producer tachometer generator on the engine sends a frequency signal to the engine gas producer tachometer indicator proportional to engine gas producer speed. Gas producer speed indication is given in percent of rpm.

96.5.19 Operational Check – Gas Producer Tachometer Indicator

SPECIAL TEST EQUIPMENT

TYPE OR MODEL	NOMENCLATURE
Howell H337 or Equivalent	Engine Test Set

96.5.19.1 Disconnect connector (P89) from engine gas producer tachometer generator and connect to matching receptacle on test set. Energize tachometer generator on test set. Verify engine gas producer tachometer pointers on pilot and copilot dual tachometer indicators read upscale and indicate approximate speed at which test set tachometer generator is turning.

96.5.19.2 Disconnect connector (P89) from test set and connect to engine gas producer tachometer generator.

• COPYRIGHT © 2023 BY EAGLE COPTERS MAINTENANCE LTD •
THIS DOCUMENT IS PRIVATE AND CONFIDENTIAL AND IS SUPPLIED ON THE EXPRESS CONDITION THAT IT IS NOT TO BE USED FOR ANY PURPOSE OR COPIED OR COMMUNICATED TO ANY OTHER PERSON WITHOUT WRITTEN PERMISSION FROM EAGLE COPTERS MAINTENANCE LTD.

96.6 DC POWERED INDICATOR SYSTEMS

NOTE

S/Ns 30687, 30817 and 30599 use the following AC powered indicators: Torque, Engine Oil Pressure, Transmission Oil Pressure, Hydraulic Pressure, Fuel Pressure, Fuel Quantity, Dual Tachometer and Gas Producer Tachometer.

NOTE

All S/Ns except 30687, 30817 and 30599 use the following DC powered indicators: Torque, Engine Oil Pressure, Transmission Oil Pressure, Hydraulic Pressure, Fuel Pressure, Dual Tachometer and Gas Producer Tachometer.

96.6.1 DC Powered Indicator Systems

The DC indicator systems consist of engine oil temperature indicator, transmission oil temperature indicator, engine hour meter, turn and bank indicator, EGT/MGT indicator, and hydraulic oil temperature indicator systems and in all S/Ns except 30687, 30817 and 30599 Torque, Engine Oil Pressure, Transmission Oil Pressure, Fuel Pressure, Dual Tachometer and Gas Producer Tachometer.

96.6.2 Engine Oil Temperature Indicator

The engine oil temperature indicator system consists of the engine oil temperature bulb, indicator, and circuit breaker. DC power is supplied through the ENG OIL TEMP circuit breaker.

96.6.3 Operational Check – Engine Oil Temperature Indicator

96.6.3.1 Apply electrical power to helicopter electrical system. Verify engine oil temperature indicator reads approximately ambient temperature with transmission cold.

96.6.3.2 Turn electric power off.

96.6.4 Transmission Oil Temperature Indicator

The transmission oil temperature indicator system consists of the transmission oil temperature bulb, indicator and circuit breaker.

96.6.5 Operational Check – Transmission Oil Temperature Indicator

96.6.5.1 Apply electrical power to helicopter electrical system. Verify transmission oil temperature indicator reads approximately ambient temperature with engine cold.

96.6.5.2 Turn electric power off.

96.6.6 Engine Hourmeter

The engine hourmeter system consists of the hourmeter, engine torque pressure switch, hourmeter relay, and circuit breaker.

96.6.7 Operational Check – Engine Hourmeter

96.6.7.1 On helicopter perform operational check as follows:

96.6.7.1.1 Disconnect connector (P220S) from engine torque pressure switch. Connect a temporary short between pins B and C of connector (P220S).

96.6.7.1.2 Open RPM WARNING circuit breaker.

96.6.7.1.3 Apply electrical power to helicopter electrical system. Verify engine hourmeter operates.

96.6.7.1.4 Remove temporary short installed in step 96.6.7.1.1, close circuit breaker,

• COPYRIGHT © 2023 BY EAGLE COPTERS MAINTENANCE LTD •
THIS DOCUMENT IS PRIVATE AND CONFIDENTIAL AND IS SUPPLIED ON THE EXPRESS CONDITION THAT IT IS NOT TO BE USED FOR ANY PURPOSE OR COPIED OR COMMUNICATED TO ANY OTHER PERSON WITHOUT WRITTEN PERMISSION FROM EAGLE COPTERS MAINTENANCE LTD.

and connect connector (P220S) to engine torque pressure switch.

96.6.7.1.5 Turn electric power off.

96.6.8 Turn and Bank Indicator

The turn and bank indicator system consists of the indicator and circuit breaker.

96.6.9 Operational Test – Turn and Bank Indicator

96.6.9.1 Apply electrical power to helicopter electrical system. Verify pilot turn and slip gyro is running and that OFF flag is out of view.

96.6.9.2 Open TURN & BANK circuit breaker. Verify pilot turn and slip gyro de-energizes and OFF flag on indicator is in view.

96.6.9.3 Close TURN & BANK circuit breaker.

96.6.10 Exhaust Gas Temperature Indicator (-17A Engines)

The exhaust gas temperature indicator system consists of 1 of 2 systems. The thermocouples located on the engine, a compensator located on the forward side of the aft RH firewall, and the analog EGT indicator, or the thermocouples located on the engine and a self-compensating indicator which displays both analog and digital information.

96.6.11A Operational Test- Exhaust Gas Temperature Indicator (Analog Indicator)

SPECIAL TEST EQUIPMENT

TYPE OR MODEL	NOMENCLATURE
Barfield Type 2312G or TT1000A	Turbine Temperature Test Set

NOTE
Tolerances stated do not include test equipment tolerances.

96.6.11A.1 Supply electrical power to helicopter.

96.6.11A.2 Remove EGT indicator from instrument panel and disconnect the leads from the back of the indicator.

96.6.11A.3 Using a multimeter, verify the resistance between the leads is exactly 8.0 Ohms. If the resistance is not 8.0 ohms, adjust the compensator until the multimeter reads exactly 8.0 ohms.

96.6.11A.4 Reconnect the leads to the indicator ensuring that they are installed on the correct terminals.

96.6.11A.5 Disconnect connector containing engine harness chromel/alumel wiring from the RH aft firewall disconnect.

96.6.11A.6 Connect turbine temperature test set to the connector on the RH aft firewall from where the engine side harness was disconnected. Adjust tester for an input of 500°C and verify exhaust gas temperature indicator reads within 10°C of this temperature.

96.6.11A.7 Check insulation resistance of engine thermocouple harness with tester. Resistance to ground from either chromel or alumel terminal (pins A and B) shall be not less than 25,000 ohms. Reference Honeywell Maintenance Manual, T5313B and T5317 Series, Section 77-20-01, Paragraphs 3-A-5 and 3-F-1-a.

96.6.11A.8 Measure loop resistance between chromel and alumel terminals (pins A and B) of the engine thermocouple harness. Resistance shall be between 1.6Ω and 1.8Ω when measured at 18°C to 24°C. Reference Honeywell Maintenance Manual, T5313B and T5317 Series, Section 77-20-01, Paragraph 3-D.

• COPYRIGHT © 2023 BY EAGLE COPTERS MAINTENANCE LTD •
THIS DOCUMENT IS PRIVATE AND CONFIDENTIAL AND IS SUPPLIED ON THE EXPRESS CONDITION THAT IT IS NOT TO BE USED FOR ANY PURPOSE OR COPIED OR COMMUNICATED TO ANY OTHER PERSON WITHOUT WRITTEN PERMISSION FROM EAGLE COPTERS MAINTENANCE LTD.

96.6.11B Operational Test- Exhaust Gas Temperature Indicator (Analog/Digital Indicator)

SPECIAL TEST EQUIPMENT

TYPE OR MODEL	NOMENCLATURE
Barfield Type 2312G or TT1000A	Turbine Temperature Test Set

NOTE
Tolerances stated do not include test equipment tolerances.

96.6.11B.1 Supply electrical power to helicopter.

96.6.11B.2 Disconnect connector containing engine harness chromel/alumel wiring from the RH aft firewall disconnect.

96.6.11B.3 Connect turbine temperature test set to the connector on the RH aft firewall from where the engine side harness was disconnected. Adjust tester for an input of 500°C and verify the analog indication reads within 10°C of this temperature and the digital indication reads within 5°C of this temperature.

96.6.11B.4 Check insulation resistance of engine thermocouple harness with tester. Resistance to ground from either chromel or alumel terminal (pins A and B) shall be not less than 25,000 ohms. Reference Honeywell Maintenance Manual, T5313B and T5317 Series, Section 77-20-01, Paragraphs 3-A-5 and 3-F-1-a.

96.6.11B.5 Measure loop resistance between chromel and alumel terminals (pins A and B) of the engine thermocouple harness. Resistance shall be between 1.6Ω and 1.8Ω when measured at 18°C to 24°C. Reference Honeywell Maintenance Manual, T5313B and T5317 Series, Section 77-20-01, Paragraph 3-D.

96.6.12 Measured Gas Temperature Indicator (-17B Engines)

The measured gas temperature indicator system consists of 1 of 2 systems. The thermocouples located on the engine, a compensator located on the forward side of the aft RH firewall, and the analog MGT indicator, or the thermocouples located on the engine and a self-compensating indicator which displays both analog and digital information.

96.6.13A Operational Test- Measured Gas Temperature Indicator (Analog Indicator)

SPECIAL TEST EQUIPMENT

TYPE OR MODEL	NOMENCLATURE
Barfield Type 2312G or TT1000A	Turbine Temperature Test Set

NOTE
Tolerances stated do not include test equipment tolerances.

96.6.13A.1 Supply electrical power to helicopter.

96.6.13A.2 Disconnect connector containing engine harness chromel/alumel wiring from the RH aft firewall disconnect.

96.6.13A.3 Connect turbine temperature test set to the connector on the RH aft firewall from where the engine side harness was disconnected. Adjust tester for an input of 675°C and verify the MGT indicator reads within 5°C of this temperature. If the temperature indication is not within 5°C, adjust the compensator until the indicator reads exactly 675°C.

96.6.13A.4 Check insulation resistance of engine thermocouple harness with tester. Resistance to ground from either chromel or alumel terminal (pins A and B) shall be not less than 25,000 ohms. Reference Honeywell Maintenance Manual, T5313B and T5317 Series, Section 77-20-01, Paragraphs 3-A-5 and 3-F-1-a.

• COPYRIGHT © 2023 BY EAGLE COPTERS MAINTENANCE LTD •
THIS DOCUMENT IS PRIVATE AND CONFIDENTIAL AND IS SUPPLIED ON THE EXPRESS CONDITION THAT IT IS NOT TO BE USED FOR ANY PURPOSE OR COPIED OR COMMUNICATED TO ANY OTHER PERSON WITHOUT WRITTEN PERMISSION FROM EAGLE COPTERS MAINTENANCE LTD.

96.6.13A.5 Measure loop resistance between chromel and alumel terminals (pins A and B) of the engine thermocouple harness. Resistance shall be between 1.6Ω and 1.8Ω when measured at 18°C to 24°C. Reference Honeywell Maintenance Manual, T5313B and T5317 Series, Section 77-20-01, Paragraph 3-D.

96.6.13B Operational Test- Measured Gas Temperature Indicator (Analog/Digital Indicator)

SPECIAL TEST EQUIPMENT

TYPE OR MODEL	NOMENCLATURE
Barfield Type 2312G or TT1000A	Turbine Temperature Test Set

NOTE
Tolerances stated do not include test equipment tolerances.

96.6.13B.1 Supply electrical power to helicopter.

96.6.13B.2 Disconnect connector containing engine harness chromel/alumel wiring from the RH aft firewall disconnect.

96.6.13B.3 Connect turbine temperature test set to the connector on the RH aft firewall from where the engine side harness was disconnected. Adjust tester for an input of 675°C and verify the analog indication reads within 5°C of this temperature and the digital indication reads within 2°C of this temperature.

96.6.13B.4 Check insulation resistance of engine thermocouple harness with tester. Resistance to ground from either chromel or alumel terminal (pins A and B) shall be not less than 25,000 ohms. Reference Honeywell Maintenance Manual, T5313B and T5317 Series, Section 77-20-01, Paragraphs 3-A-5 and 3-F-1-a.

96.6.13B.5 Measure loop resistance between chromel and alumel terminals (pins A and B) of the engine thermocouple harness. Resistance shall be between 1.6Ω and 1.8Ω when measured at 18°C to 24°C. Reference Honeywell Maintenance Manual, T5313B and T5317 Series, Section 77-20-01, Paragraph 3-D.

• COPYRIGHT © 2023 BY EAGLE COPTERS MAINTENANCE LTD •
THIS DOCUMENT IS PRIVATE AND CONFIDENTIAL AND IS SUPPLIED ON THE EXPRESS CONDITION THAT IT IS NOT TO BE USED FOR ANY PURPOSE OR COPIED OR COMMUNICATED TO ANY OTHER PERSON WITHOUT WRITTEN PERMISSION FROM EAGLE COPTERS MAINTENANCE LTD.

96.6.14 Hydraulic Oil Temperature Indicators

The hydraulic oil temperature indicator system consists of 2 identical systems, No.1 and No.2 hydraulic temp bulbs, and hydraulic indicators. Hydraulic temperature bulbs control indicators which display in degrees Celsius. The indicator is a dual hydraulic temperature/pressure indicator.

96.6.15 Operational Check – Hydraulic Temperature Indicators

96.6.15.1 No.1 hydraulic system.

96.6.15.1.1 Apply electrical power to helicopter electrical system.

96.6.15.1.2 Verify No.1 HYD OIL temperature indicator reads approximately ambient temperature with engine cold.

96.6.15.2 No.2 hydraulic system.

96.6.15.2.1 Verify No.2 HYD OIL temperature indicator reads approximately ambient temperature with engine cold.

96.6.15.2.2 Turn electric power off.

96.6.16 Attitude Indicator

The attitude indicator is a self-contained unit which displays aircraft attitude, pitch and roll. The indicator also as a backup battery which can supply power to the indicator for up to one hour should aircraft power be lost to the indicator. The indicator also has a PULL TO CAGE knob located in the lower right corner of the unit and a STBY PWR light and test switch used to test the battery and indicator. Rotating the PULL TO CAGE knob will move the aircraft icon up or down.

96.6.17 Operational Check – Attitude Indicator

96.6.17.1 Apply electrical power to helicopter electrical system.

96.6.17.2 Close ATT IND PILOT circuit breaker. Verify that gyro begins to spin up. Pull the PULL TO CAGE knob and verify indicator erects to correct attitude. Warning flag should be out of view in less than 3 minutes.

96.6.17.3 Once warning flag is out of view, accomplish the following:

96.6.17.3.1 Open ATT IND PILOT circuit breaker. Verify the warning flag appears, and that the gyro begins to spin down.

96.6.17.3.2 Close ATT IND PILOT circuit breaker.

96.6.17.4 Turn electric power off.

96.6.18 Gyro Directional Indicator

The gyro directional indicator is a self contained unit which displays aircraft heading using an internal directional gyro. A heading adjust knob, located at the lower left corner of the indicator, allows for adjustment of a heading bug to a desired heading.

96.6.19 Operational Check – Gyro Directional Indicator

96.6.19.1 Apply electrical power to helicopter electrical system.

96.6.19.2 Close CRS IND PILOT circuit breaker. Verify that gyro begins to spin up and warning flag is out of view in less than 3 minutes.

96.6.19.3 Rotate the heading knob and verify the heading bug will rotate the full 360° of the indicator.

• COPYRIGHT © 2023 BY EAGLE COPTERS MAINTENANCE LTD •
THIS DOCUMENT IS PRIVATE AND CONFIDENTIAL AND IS SUPPLIED ON THE EXPRESS CONDITION THAT IT IS NOT TO BE USED FOR ANY PURPOSE OR COPIED OR COMMUNICATED TO ANY OTHER PERSON WITHOUT WRITTEN PERMISSION FROM EAGLE COPTERS MAINTENANCE LTD.

96.6.19.4 Open CRS IND PILOT circuit breaker. Verify that warning flag comes into view.

96.6.19.5 Close CRS IND PILOT circuit breaker.

96.6.19.6 Turn electric power off.

96.6.20 DC Torque Indicator

NOTE
S/Ns 30687, 30817 and 30599 use an AC Torque Indicator indicating system. See section 96.5 for details. For all S/Ns except 30687, 30817 and 30599 refer to this section for details of the DC Torque Indicating system.

96.6.20.1 The DC torque indicator system is a remote type indicating system. DC power is routed through a circuit breaker to the torque indicator which supplies an excitation voltage to the transmitter. Any pressure sensed by the torque transmitter will be indicated on the torque indicator. The copilot torque indicator is independent of the pilot's system but functions in the same manner. The indicator reads in Percent of maximum torque and also has a digital display which displays percent of maximum torque. The digital display will flash when a potential or actual over-torque occurs and the unit will store this information in its non-volatile memory.

96.6.21 Operational Check and Calibration – DC Torque Indicator

96.6.21.1 Any time a transmitter is removed or replaced for any reason an operational check should be performed to verify proper calibration.

SPECIAL TEST EQUIPMENT

TYPE OR MODEL	NOMENCLATURE
Barfield Type 2311F-S or Equivalent	Pressure Tester 0 – 150 psi (0 – 1034 KPa)

96.6.21.2 The torque indicator must be aligned to the engine installed in accordance with the torque pressure setting on the engine data plate.

96.6.21.3 Alignment is accomplished by the following procedure:

96.6.21.3.1 Open the circuit breaker supplying power to the associated torque indicator. Remove the indicator from the instrument panel and disconnect the electrical connector from the back of the instrument.

96.6.21.3.2 Connect the calibration stick p/n 10012-033 in line between the indicator and the electrical connector removed in the previous step.

96.6.21.3.3 Remove pressure line from the torque pressure transmitter being tested and attach dead weight pressure tester (Figure 96-5) to the transmitter.

96.6.21.3.4 Set the pressure on the dead weight tester to 0.2 x P (Calibration point 1)

NOTE

$$P = \left(\frac{\text{Eng Data Plate}}{47.5} \right) X \ 55.7$$

96.6.21.3.5 Close the circuit breaker opened in step 96.6.21.3.1. indicator will display "CA" for 5 seconds, then will display current torque pressure for 10 seconds, then display "CA" for another 5 seconds, then display "CA1", indicating that calibration point 1 has been stored.

96.6.21.3.6 Open the associated circuit breaker again.

96.6.21.3.7 Set the pressure on the dead weight tester to 0.95 x P (Calibration point 2)

NOTE

$$P = \left(\frac{\text{Eng Data Plate}}{47.5} \right) X \ 55.7$$

• COPYRIGHT © 2023 BY EAGLE COPTERS MAINTENANCE LTD •
THIS DOCUMENT IS PRIVATE AND CONFIDENTIAL AND IS SUPPLIED ON THE EXPRESS CONDITION THAT IT IS NOT TO BE USED FOR ANY PURPOSE OR COPIED OR COMMUNICATED TO ANY OTHER PERSON WITHOUT WRITTEN PERMISSION FROM EAGLE COPTERS MAINTENANCE LTD.

96.6.21.3.8 Close the circuit breaker opened in step 96.6.21.3.6. indicator will display “CA” for 5 seconds, then will display current torque pressure for 10 seconds, then display “CA” for another 5 seconds, then display CA2” indicating that Calibration point 2 has been stored. Calibration is now complete.

96.6.21.3.9 Open the torque indicator circuit breaker.

96.6.21.3.10 Remove calibration stick, reconnect the indicator, reinstall the indicator and close the circuit breaker.

96.6.21.3.11 Verify the calibration by first setting the dead weight tester to the value calculated in 96.6.21.3.7. Indicator should read 95 ± 0.2%. Then set the dead weight tester to the value calculated in 96.6.21.3.4 and verify indicator reads 20 ± 0.2%.

CAUTION

DO NOT EXCEED 65 PSI APPLIED PRESSURE TO TRANSMITTERS

96.6.22 DC Engine Oil Pressure Indicator

NOTE

S/Ns 30687, 30817 and 30599 use an AC Engine Oil Pressure indicating system. See section 96.5 for details. For all S/Ns except 30687, 30817 and 30599 refer to this section for details of the DC Engine Oil Pressure indicating system.

96.6.22.1 The engine oil pressure indicator system is a remote type indicating system. DC power is routed through a circuit breaker to the engine oil pressure indicator which supplies an excitation voltage to the transmitter. Any pressure sensed by the transmitter will be indicated on the engine oil pressure indicator.

96.6.23 Operational Check – DC Engine Oil Pressure Indicator

SPECIAL TEST EQUIPMENT

TYPE OR MODEL	NOMENCLATURE
Barfield Type 2311F-S or Equivalent	Pressure Tester 0 – 150 psi (0 – 1034 KPa)

96.6.23.1 Perform operational check as follows:

96.6.23.1.1 Disconnect pressure line from oil pressure transmitter on engine.

96.6.23.1.2 Attach dead weight pressure tester to the transmitter and apply 100 psig (689.5 KPa) to transmitter. Do not exceed 110 psig (758.45 KPa)

96.6.23.1.3 Apply electrical power to the helicopter electrical system. Verify ENGINE OIL pressure indicator reads 100 ± 10 psi.

96.6.23.1.4 Turn electrical power off.

96.6.23.1.5 Reduce pressure and remove ressure tester from pressure transmitter. Connect pressure line to engine oil pressure transmitter.

96.6.24 DC Transmission Oil Pressure Indicator

NOTE

S/Ns 30687, 30817 and 30599 use an AC Transmission Oil Pressure indicating system. See section 96.5 for details. For all S/Ns except 30687, 30817 and 30599 refer to this section for details of the DC Transmission Oil Pressure indicating system.

96.6.24.1 The transmission oil pressure indicator system is a remote type indicating system. DC power is routed through a circuit breaker to the transmission oil pressure indicator which supplies an excitation voltage to the

• COPYRIGHT © 2023 BY EAGLE COPTERS MAINTENANCE LTD •
THIS DOCUMENT IS PRIVATE AND CONFIDENTIAL AND IS SUPPLIED ON THE EXPRESS CONDITION THAT IT IS NOT TO BE USED FOR ANY PURPOSE OR COPIED OR COMMUNICATED TO ANY OTHER PERSON WITHOUT WRITTEN PERMISSION FROM EAGLE COPTERS MAINTENANCE LTD.

transmitter. Any pressure sensed by the transmitter will be indicated on the transmission oil pressure indicator.

96.6.25 Operational Check – DC Transmission Oil Pressure Indicator

SPECIAL TEST EQUIPMENT

TYPE OR MODEL	NOMENCLATURE
Barfield Type 2311F-S or Equivalent	Pressure Tester 0 – 150 psi (0 – 1034 KPa)

96.6.25.1 Perform operational check as follows:

96.6.25.1.1 Disconnect pressure line from transmission oil pressure transmitter.

96.6.25.1.2 Attach dead weight pressure tester to the transmitter and apply 100 psig (689.5 KPa) to transmitter. Do not exceed 110 psig (758.45 KPa)

96.6.25.1.3 Apply electrical power to the helicopter electrical system. Verify TRANSMISSION OIL pressure indicator reads 100 ± 10 psi.

96.6.25.1.4 Turn electrical power off.

96.6.25.1.5 Reduce pressure and remove pressure tester from pressure transmitter. Connect pressure line to transmission oil pressure transmitter.

96.6.26 DC Hydraulic Pressure Indicator

NOTE

S/Ns 30687, 30817 and 30599 use an AC Hydraulic Pressure indicating system. See section 96.5 for details. For all S/Ns except 30687, 30817 and 30599 refer to this section for details of the DC Hydraulic Pressure indicating system.

96.6.26.1 The hydraulic pressure indicator system is a remote type indicating system. DC power is routed through a circuit breaker to the hydraulic pressure indicator which supplies an excitation voltage to the transmitter. Any pressure sensed by the transmitter will be indicated on the transmission oil pressure indicator. The indicator is a dual hydraulic pressure/temperature indicator.

96.6.27 Operational Check – DC Hydraulic Pressure Indicator

SPECIAL TEST EQUIPMENT

TYPE OR MODEL	NOMENCLATURE
----------	Hydraulic test stand

96.6.27.1 Perform operational check as follows:

96.6.27.1.1 Apply electrical power to helicopter electrical system and energize the No. 1 hydraulic system.

96.6.27.1.2 Connect hydraulic test cart to helicopter No. 1 hydraulic system. Slowly increase and decrease test unit pressure between 550 and 1000 psig (3792 to 6895 KPa)

96.6.27.1.3 Observe No. 1 hydraulic system indicator for smooth operation throughout range.

96.6.27.1.4 De-energize system No. 1 and disconnect test cart from system No.1.

96.6.27.1.5 Repeat steps 96.6.27.1.1 to 96.6.27.1.4 for No. 2 system.

96.6.27.1.3 Remove electrical power from helicopter electrical system

• COPYRIGHT © 2023 BY EAGLE COPTERS MAINTENANCE LTD •
THIS DOCUMENT IS PRIVATE AND CONFIDENTIAL AND IS SUPPLIED ON THE EXPRESS CONDITION THAT IT IS NOT TO BE USED FOR ANY PURPOSE OR COPIED OR COMMUNICATED TO ANY OTHER PERSON WITHOUT WRITTEN PERMISSION FROM EAGLE COPTERS MAINTENANCE LTD.

96.6.28 Fuel Pressure Indicator

NOTE

S/Ns 30687, 30817 and 30599 use an AC Fuel Pressure indicating system. See section 96.5 for details. For all S/Ns except 30687, 30817 and 30599 refer to this section for details of the DC Fuel Pressure indicating system.

96.6.28.1 The fuel pressure indicator system is a remote type indicating system. DC power is routed through a circuit breaker to the transmission oil pressure indicator which supplies an excitation voltage to the transmitter. Any pressure sensed by the transmitter will be indicated on the fuel pressure indicator.

96.6.29 Operational Check – DC Fuel Pressure Indicator

SPECIAL TEST EQUIPMENT

TYPE OR MODEL	NOMENCLATURE
Barfield Type 2311F-S or Equivalent	Pressure Tester 0 – 150 psi (0 – 1034 KPa)

96.6.29.1 Perform operational check as follows:

96.6.29.1.1 Disconnect fuel pressure line from fuel pressure transmitter on engine.

96.6.29.1.2 Attach dead weight pressure tester to the transmitter and apply 50 psig (344.8 KPa) to transmitter. Do not exceed 57 psig (393.0 KPa)

96.6.29.1.3 Apply electrical power to the helicopter electrical system. Verify ENGINE FUEL pressure indicator reads 50 ± 7 psi.

96.6.29.1.4 Turn electrical power off.

96.6.29.1.5 Reduce pressure and remove pressure tester from pressure transmitter. Connect fuel pressure line to fuel pressure transmitter.

96.6.30 DC Dual Tachometer Indicator

NOTE

S/Ns 30687, 30817 and 30599 use an AC Dual Tachometer indicating system. See section 96.5 for details. For all S/Ns except 30687, 30817 and 30599 refer to this section for details of the DC Dual Tachometer indicating system.

96.6.30.1 The DC dual tachometer indicator system consists of the engine power turbine tachometer generator, rotor tachometer generator and dual tachometer indicator. The DC dual tachometer indicator uses DC power for internal regulation.

96.6.31 Operational Check – DC Dual Tachometer Indicator

SPECIAL TEST EQUIPMENT

TYPE OR MODEL	NOMENCLATURE
Howell H337 or Equivalent	Engine test set

96.6.31.1 Perform operational check as follows:

96.6.31.1.1 Apply electrical power to helicopter electrical system.

96.6.31.1.2 Disconnect connector (P35) from main rotor tachometer generator and connect to matching receptacle on test set.

96.6.31.1.3 Energize tachometer generator on test set.

96.6.31.1.4 Verify rotor tachometer pointers on pilot and copilot dual tachometers read upscale and indicate speed at which test set tachometer generator is turning.

• COPYRIGHT © 2023 BY EAGLE COPTERS MAINTENANCE LTD •
THIS DOCUMENT IS PRIVATE AND CONFIDENTIAL AND IS SUPPLIED ON THE EXPRESS CONDITION THAT IT IS NOT TO BE USED FOR ANY PURPOSE OR COPIED OR COMMUNICATED TO ANY OTHER PERSON WITHOUT WRITTEN PERMISSION FROM EAGLE COPTERS MAINTENANCE LTD.

96.6.31.1.5 Disconnect connector (P35) from test set and reconnect to rotor tachometer generator.

96.6.31.1.6 Disconnect connector (P111) from engine power turbine tachometer generator and connect to matching receptacle on test set.

96.6.31.1.7 Energize tachometer generator on test set.

96.6.31.1.8 Verify power turbine tachometer pointers on pilot and copilot dual tachometers read upscale and indicate speed at which test set tachometer generator is turning.

96.6.31.1.9 Disconnect connector (P111) from test set and reconnect to engine power turbine tachometer generator.

96.6.31.1.10 Remove electrical power from helicopter.

96.6.32 DC Gas Producer Tachometer Indicator

NOTE

S/Ns 30687, 30817 and 30599 use an AC Gas Producer Tachometer indicating system. See section 96.5 for details. For all S/Ns except 30687, 30817 and 30599 refer to this section for details of the DC Gas Producer Tachometer indicating system.

96.6.32.1 The DC gas producer tachometer indicator system consists of the engine gas producer tachometer generator and gas producer tachometer indicator. The gas producer tachometer generator on the engine sends a frequency signal to the engine gas producer tachometer indicator proportional to engine gas producer speed. Gas producer speed is given on percent of rpm. The DC gas producer tachometer indicator uses DC power to display a digital readout of rpm and store any exceedances.

96.6.33 Operational Check – DC Gas Producer Tachometer Indicator

SPECIAL TEST EQUIPMENT

TYPE OR MODEL	NOMENCLATURE
Howell H337 or Equivalent	Engine test set

96.6.33.1 Perform operational check as follows:

96.6.33.1.1 Apply electrical power to helicopter electrical system.

96.6.33.1.2 Disconnect connector (P89) from engine gas producer tachometer generator and connect to matching receptacle on test set.

96.6.33.1.3 Energize tachometer generator on test set.

96.6.33.1.4 Verify engine gas producer tachometer pointers on pilot and copilot dual tachometers read upscale and indicate speed at which test set tachometer generator is turning.

96.6.33.1.5 Disconnect connector (P89) from test set and reconnect to engine gas producer tachometer generator.

96.6.33.1.10 Remove electrical power from helicopter.

96.7 INTERIOR LIGHTING SYSTEM

96.7.1 Interior Lighting Systems

The interior lighting systems include cockpit lights, dome lights, pilot instrument lights, copilot instrument lights, engine instrument lights, secondary instrument lights, pedestal lights, overhead console lights, and cargo compartment lights.

• COPYRIGHT © 2023 BY EAGLE COPTERS MAINTENANCE LTD •
THIS DOCUMENT IS PRIVATE AND CONFIDENTIAL AND IS SUPPLIED ON THE EXPRESS CONDITION THAT IT IS NOT TO BE USED FOR ANY PURPOSE OR COPIED OR COMMUNICATED TO ANY OTHER PERSON WITHOUT WRITTEN PERMISSION FROM EAGLE COPTERS MAINTENANCE LTD.

CHAPTER 96 – ELECTRICAL SYSTEM (96-00-00)

96.7.2 Cockpit Lights

Cockpit lights are multipurpose utility lights designed to selectively provide either red or white illumination, utilizing a narrow spotlight beam or wide floodlight beam. Controls necessary to obtain operational modes of ON/OFF, BRIGHT/DIM, SPOT/FLOOD, and red or white illumination are incorporated in the lamp body.

96.7.3 Operational Check – Cockpit Lights

96.7.3.1 Apply electrical power to helicopter electrical system. Check that pilot cockpit light is operational in each mode (ON/OFF, DIM/BRIGHT, and SPOT/FLOOD on both red and white).

96.7.3.2 Check that copilot cockpit light is operational in each mode (ON/OFF, DIM/BRIGHT, and SPOT/FLOOD on both red and white).

96.7.3.3 Turn electrical power off.

96.7.4 Dome Lights

The aft dome lights can be illuminated red or white by setting the AFT DOME LTS switch to RED or WHITE position. Brightness level of the aft dome lights is determined by the AFT DOME LTS dimmer control rheostat.

96.7.5 Operational Check – Dome Lights

96.7.5.1 Apply electrical power to helicopter electrical system.

96.7.5.2 Set NON-ESS BUS switch to MANUAL. Set AFT DOME LT switch to RED. Rotate AFT DOME LT dimmer control clockwise. Verify red dome lights increase in brightness.

96.7.5.3 Rotate AFT DOME LT dimmer control counter-clockwise. Verify red dome lights decrease in brightness.

96.7.5.4 Set AFT DOME LT switch to WHITE. Repeat operations of dimmer control as described in steps 96.7.5.2 and 96.7.5.3. Verify white dome lights respond as described for red dome lights.

96.7.5.5 Turn electrical power off.

96.7.6 Pilot And Copilot Instrument Panel Lights

The pilot and copilot instrument panel lights system consists of 2 circuit breakers on the overhead console, pilot and copilot instrument light controls on the overhead console, and pilot and copilot instrument lights.

96.7.7 Operational Check – Pilot and Copilot Instrument Panel Lights

96.7.7.1 Apply electrical power to helicopter electrical system.

96.7.7.2 Pilot lighting check.

96.7.7.2.1 Rotate PILOT INSTR LT control slightly clockwise until switch just closes. Verify instrument lights on the pilot instrument panel and passenger warning lights are illuminated dimly.

96.7.7.2.2 Rotate PILOT INSTR LT control in clockwise direction. Verify instrument lights on the pilot instrument panel and passenger warning lights increase in brightness and are brightest when control is at extreme clockwise position.

96.7.7.2.3 Rotate PILOT INSTR LT control in counter-clockwise direction. Verify instrument lights on the pilot instrument panel and passenger warning lights decrease in brightness.

96.7.7.2.4 Rotate PILOT INSTR LT control to OFF. Verify instrument lights on the pilot instrument panel and passenger warning lights extinguish.

96.7.7.3 Copilot lighting check.

• COPYRIGHT © 2023 BY EAGLE COPTERS MAINTENANCE LTD •
THIS DOCUMENT IS PRIVATE AND CONFIDENTIAL AND IS SUPPLIED ON THE EXPRESS CONDITION THAT IT IS NOT TO BE USED FOR ANY PURPOSE OR COPIED OR COMMUNICATED TO ANY OTHER PERSON WITHOUT WRITTEN PERMISSION FROM EAGLE COPTERS MAINTENANCE LTD.

96.7.7.3.1 Rotate COPILOT INSTR LT control slightly clockwise until switch just closes. Verify instrument lights on the copilot instrument panel are illuminated dimly.

96.7.7.3.2 Rotate COPILOT INSTR LT control in clockwise direction. Verify instrument lights on the copilot instrument panel increase in brightness and are brightest when control is at extreme clockwise position.

96.7.7.3.3 Rotate COPILOT INSTR LT control in counter-clockwise direction. Verify instrument lights on the copilot instrument panel decrease in brightness.

96.7.7.3.4 Rotate COPILOT INSTR LT control to OFF. Verify instrument lights on the copilot instrument panel extinguish.

96.7.7.4 Turn electrical power off.

96.7.8 Engine Instrument Panel Lights

The instrument panel lights system consists of a circuit breaker and engine instrument light control on the overhead console, instrument lights transistors located on the nose compartment, and the instrument lights.

96.7.9 Operational Check – Engine Instrument Panel Lights

96.7.9.1 Apply electrical power to helicopter electrical system.

96.7.9.2 Rotate ENG INSTR LT control slightly clockwise until switch just closes. Verify engine instrument lights are illuminated dimly.

96.7.9.3 Rotate ENG INSTR LT control in clockwise direction. Verify engine instrument lights increase in brightness and are brightest when control is at extreme clockwise position.

96.7.9.4 Rotate ENG INSTR LT control in counter-clockwise direction. Verify engine instrument lights decrease in brightness.

96.7.9.5 Rotate ENG INSTR LT control to OFF. Verify engine instrument lights extinguish.

96.7.9.6 Turn electrical power off.

96.7.10 Instrument Secondary Lights

The instrument secondary lights system consists of a circuit breaker and secondary lights control on the overhead console, secondary lights transistor mounted in the cabin roof and instrument (white) secondary lights.

96.7.11 Operational Check – Instrument Secondary Lights

96.7.11.1 Apply electrical power to helicopter electrical system.

96.7.11.2 Rotate SEC INSTR LT control slightly clockwise until switch just closes. Verify instrument secondary lights are illuminated dimly.

96.7.11.3 Rotate SEC INSTR LT control in clockwise direction. Verify instrument secondary lights increase in brightness and are brightest when control is at extreme clockwise position.

96.7.11.4 Rotate SEC INSTR LT control in counter-clockwise direction. Verify instrument secondary lights decrease in brightness.

96.7.11.5 Rotate SEC INSTR LT control to OFF. Verify instrument secondary lights extinguish.

96.7.11.6 Turn electrical power off.

96.7.12 Pedestal Lights

The pedestal lights system consists of a circuit breaker and pedestal lights control on the overhead console, pedestal lights transistor mounted in the cabin roof, left side, and pedestal lights.

• COPYRIGHT © 2023 BY EAGLE COPTERS MAINTENANCE LTD •
THIS DOCUMENT IS PRIVATE AND CONFIDENTIAL AND IS SUPPLIED ON THE EXPRESS CONDITION THAT IT IS NOT TO BE USED FOR ANY PURPOSE OR COPIED OR COMMUNICATED TO ANY OTHER PERSON WITHOUT WRITTEN PERMISSION FROM EAGLE COPTERS MAINTENANCE LTD.

96.7.13 Operational Check – Pedestal Lights

96.7.13.1 Apply electrical power to helicopter electrical system.

96.7.13.2 Rotate PED LT control slightly clockwise until switch just closes. Verify pedestal lights, panel lights on pilot collective stick, and outlet valve lights on right side of doorpost are illuminated dimly.

96.7.13.3 Rotate PED LT control in clockwise direction. Verify lights increase in brightness and are brightest when control is at extreme clockwise position.

96.7.13.4 Rotate PED LT control in counter-clockwise direction. Verify lights decrease in brightness.

96.7.13.5 Rotate PED LT control to OFF. Verify lights extinguish.

96.7.13.6 Turn electrical power off.

96.7.14 Overhead Console Lights

The overhead console lights system consists of a circuit breaker and console lights control on the overhead console, overhead console lights transistor mounted in the cabin roof, right side, and overhead console lights.

96.7.15 Operational Check – Overhead Console Lights

96.7.15.1 Apply electrical power to helicopter electrical system.

96.7.15.2 Rotate CONSOLE LT control slightly clockwise until switch just closes. Verify lights on overhead console are illuminated dimly.

96.7.15.3 Rotate CONSOLE LT control in clockwise direction. Verify lights increase in brightness and are brightest when control is at extreme clockwise position.

96.7.15.4 Rotate CONSOLE LT control in counter-clockwise direction. Verify lights decrease in brightness.

96.7.15.5 Rotate CONSOLE LT control to OFF. Verify lights extinguish.

96.7.15.6 Turn electrical power off.

96.7.16 Cargo Compartment Lights

The cargo compartment lights system consists of a circuit breaker on the overhead console, cargo compartment door switch mounted in the door sill, and two cargo compartment lights.

96.7.17 Operational Check – Cargo Compartment Lights

96.7.17.1 Set BATTERY switch to ON.

96.7.17.2 Turn NON-ESS BUS switch to MANUAL.

96.7.17.3 Open cargo compartment door. Verify cargo compartment lights are illuminated.

96.7.17.4 Press plunger on cargo compartment door switch. Verify cargo compartment lights extinguish. Close cargo compartment door.

96.7.17.5 Turn electrical power off.

96.8 CAUTION AND WARNING SYSTEM

96.8.1 Caution and Warning System

The caution and warning system consists of a single caution light annunciator panel, 2 MASTER CAUTION lights, 2 ENGINE RPM warning lights and 2 ROTOR RPM caution lights, one of each at each pilot's station. The caution panel is a multi-capsule panel (each capsule including an indicator light) and each indicator light is in series with a respective caution light system containing switches and associated components. The MASTER CAUTION lights illuminate

• COPYRIGHT © 2023 BY EAGLE COPTERS MAINTENANCE LTD •
THIS DOCUMENT IS PRIVATE AND CONFIDENTIAL AND IS SUPPLIED ON THE EXPRESS CONDITION THAT IT IS NOT TO BE USED FOR ANY PURPOSE OR COPIED OR COMMUNICATED TO ANY OTHER PERSON WITHOUT WRITTEN PERMISSION FROM EAGLE COPTERS MAINTENANCE LTD.

simultaneously when one or more capsule indicators illuminate.

96.8.2 Operation – Caution and Warning System

NOTE

Indicator lights on annunciator panel are controlled by monitored systems.

The MASTER CAUTION lights illuminate in conjunction with one or more indicator panels lights to announce a fault or malfunction in a monitored system. The MASTER CAUTION lights can be reset by either momentarily depressing the TEST/RESET switch on the master caution panel, or by pressing either of the MASTER CAUTION lights at the pilots or copilots stations.

Individual indicator lights will remain illuminated as long as a fault condition exits. Momentarily pressing the TEST switch will illuminate all indicator lights on the caution panel, both MASTER CAUTION lights, both ENGINE RPM warning lights and both ROTOR RPM caution lights.

All indicator lights will illuminate bright on initial application of power. Manual selection of a bright or dimmed condition is provided by a BRIGHT/DIM switch on the caution panel. Momentarily placing the BRIGHT/DIM switch to DIM will momentarily dim the caution panel indicator lights, both MASTER CAUTION lights, both ENGINE RPM lights and both ROTOR RPM lights. The lights will dim and remain dim if the pilots INST LTS rheostat is rotated clockwise into any position but OFF. Lights can be reset by momentarily placing the BRIGHT/DIM switch to BRIGHT or by rotating the pilot INST LTS rheostat to the OFF position.

96.8.3 Operational Test – Caution Panel Light

NOTE

During system operational checks, MASTER CAUTION light on pilot and copilot instrument panels should illuminate each time a caution panel segment illuminates, and shall be reset each time in readiness for another fault indication.

96.8.3.1 On helicopter perform operational test as follows:

96.8.3.1.1 Apply electrical power to helicopter electrical system.

CAUTION

ALWAYS CLOSE RPM WARN CIRCUIT BREAKER PRIOR TO PERFORMING OPERATIONAL TESTS OR TROUBLE SHOOTING CAUTION AND WARNING SYSTEM. FAILURE TO DO SO MAY RESULT IN INTERNAL DAMAGE TO RPM LIMIT WARNING BOX. THIS PRECAUTION NOT REQUIRED ON HELICOPTERS WITH T. B. 212-76-3 INCORPORATED.

Table 96-8. Master Caution Lights

Caution lights	ON/OFF Condition
DC GENERATOR	ON
ENG OIL PRESS	ON
LH FUEL BOOST	ON
RH FUEL BOOST	ON
FUEL FILTER	OFF
LH FUEL LOW	NOTE #1
RH FUEL LOW	NOTE #1
GOV MANUAL	OFF
FUEL VALVE	OFF

• COPYRIGHT © 2023 BY EAGLE COPTERS MAINTENANCE LTD •
THIS DOCUMENT IS PRIVATE AND CONFIDENTIAL AND IS SUPPLIED ON THE EXPRESS CONDITION THAT IT IS NOT TO BE USED FOR ANY PURPOSE OR COPIED OR COMMUNICATED TO ANY OTHER PERSON WITHOUT WRITTEN PERMISSION FROM EAGLE COPTERS MAINTENANCE LTD.

CHAPTER 96 – ELECTRICAL SYSTEM (96-00-00)

CAUTION PANEL	OFF
XMSN OIL TEMP	OFF
XMSN OIL PRESS	ON
#1 INVERTER	ON
#2 INVERTER	ON
CHIP XMSN	OFF
CHIP ENGINE	OFF
CHIP 42° GB	OFF
CHIP 90° GB	OFF
#1 HYDR SYST	ON
#2 HYDR SYST	ON
CARGO DOOR	NOTE #2
PASS DOOR	NOTE #2
HEATER O/HEAT	OFF
HEATER AIRLINE	OFF
BATTERY	OFF
EXTERNAL POWER	NOTE #3
ENG ICING	NOTE #4
ENG DE-ICE ON	OFF
ENG ICE DET	OFF
ENG FUEL PUMP	ON
ENG OIL FILTER	OFF
ROTOR BK	See Note #5

NOTE: *#1: Light is in ON condition only when fuel quantity is less than 150 pounds.*
NOTE: *#2: Light is in ON condition only when an affected door is open.*
NOTE: *#3: Light may be ON if using external power.*
NOTE: *#4: Light may be ON until sufficient airflow through the engine to activate pressure switch.*
NOTE: *#5: Light is in ON condition only when Rotor Brake is engaged.*

96.8.3.1.2 Close MASTER CAUTION, CAUTION FAIL and RPM WARN circuit breakers. Verify all installed MASTER CAUTION lights illuminate and that each caution light illuminates in accordance with the Table 96-8.

96.8.3.1.3 Reset MASTER CAUTION light by pressing either pilot or copilot light or placing RESET/TEST switch to RESET and releasing. Verify all installed MASTER CAUTION lights extinguish and individual caution lights remain either on or off in accordance with the Table 96-8.

96.8.3.1.4 Test caution lights by placing RESET/TEST switch to TEST and releasing. Verify all installed MASTER CAUTION lights momentarily illuminate brightly and then extinguish and all caution lights momentarily illuminate brightly and then return to former condition.

96.8.3.1.5 Set BRIGHT/DIM switch to dim and release. Verify caution lights do not dim.

96.8.3.1.6 Rotate PILOT INSTR LT rheostat clockwise from OFF. Set BRIGHT/DIM switch to dim and release. Verify caution lights dim and hold.

96.8.3.1.7 Rotate PILOT INSTR LT rheostat counter-clockwise to OFF. Verify caution lights return to bright.

96.8.3.1.8 Ensure that GOVERNOR switch on engine and fuel control panel (A3) is set to GOV AUTO.

• COPYRIGHT © 2023 BY EAGLE COPTERS MAINTENANCE LTD •
THIS DOCUMENT IS PRIVATE AND CONFIDENTIAL AND IS SUPPLIED ON THE EXPRESS CONDITION THAT IT IS NOT TO BE USED FOR ANY PURPOSE OR COPIED OR COMMUNICATED TO ANY OTHER PERSON WITHOUT WRITTEN PERMISSION FROM EAGLE COPTERS MAINTENANCE LTD.

96.8.3.2 Verify the following occurs while MASTER CAUTION TEST switch (on the overhead console), is positioned to TEST.

96.8.3.2.1 CAUTION PANEL segment on caution panel illuminates in bright mode and all other segments are extinguished.

96.8.3.2.2 ENGINE RPM and ROTOR RPM lights are illuminated in bright.

96.8.3.2.3 All installed MASTER CAUTION lights are illuminated in bright mode.

96.8.3.3 Turn electrical power off.

96.8.4 Operational Check – DC Generator Caution Light

96.8.4.1 On helicopter perform operational check as follows:

96.8.4.1.1 Place helicopter in normal ground run operation, with generator operating in normal condition (GEN switch ON), to supply main DC buses. Close all ESS BUS No.1 FEEDERS and ESS BUS No.2 FEEDERS circuit breakers. Close NONESS BUS circuit breaker. Set NONESS BUS switch to NORMAL. Verify 28 VDC (generator voltage) is present on essential DC bus No.1, essential DC bus No.2, and nonessential DC buses.

96.8.4.1.2 Set GEN switch to OFF to simulate a generator failure. Verify 24 VDC (battery voltage) is present on essential DC bus No.1 and essential DC bus No.2, and no voltage is present on nonessential DC buses. Verify DC GENERATOR and all installed MASTER CAUTION lights are illuminated.

96.8.4.1.3 Set NON-ESS BUS switch to MANUAL. Verify 24 VDC (battery voltage) is present on both nonessential DC buses.

96.8.4.1.4 Restore normal generator operation (GEN switch ON). Set NON-ESS BUS switch to NORMAL. Verify DC GENERATOR light is extinguished. Reset MASTER CAUTION lights. Verify that 28 VDC (generator voltage) is present on both essential DC buses and both nonessential DC buses.

96.8.5 Operational Check – Engine Oil Pressure Caution Light

SPECIAL TEST EQUIPMENT

TYPE OR MODEL	NOMENCLATURE
Barfield Model 2311F-S or Equivalent	Pressure Tester 0-150 psi. (0-1034 KPa)

96.8.5.1 Disconnect engine oil pressure line from engine oil pressure switch. Connect pressure tester.

96.8.5.2 Apply electrical power to helicopter electrical system.

96.8.5.3 Apply pressure with pressure tester to pressure switch. Verify ENG OIL PRESS caution light extinguishes at 11 ±1 psig (70.9 KPa) maximum.

96.8.5.4 Relieve pressure on engine oil pressure switch. Verify ENG OIL PRESS caution light illuminates above 8 psig (55.2 KPa).

96.8.5.5 Turn electrical power off.

96.8.5.6 Disconnect tester. Connect pressure line to engine oil pressure switch.

96.8.6 Operational Check – Engine Oil Filter Caution Light

96.8.6.1 Disconnect connector (P280) from airframe mounted engine oil filter pressure switch. Connect a temporary short between terminals A and B.

96.8.6.2 Apply electrical power to helicopter electrical system. Verify ENG OIL FILTER caution light illuminates.

96.8.6.3 Turn electrical power off. Remove temporary short.

• COPYRIGHT © 2023 BY EAGLE COPTERS MAINTENANCE LTD •
THIS DOCUMENT IS PRIVATE AND CONFIDENTIAL AND IS SUPPLIED ON THE EXPRESS CONDITION THAT IT IS NOT TO BE USED FOR ANY PURPOSE OR COPIED OR COMMUNICATED TO ANY OTHER PERSON WITHOUT WRITTEN PERMISSION FROM EAGLE COPTERS MAINTENANCE LTD.

96.8.6.4 Connect connector (P280) to airframe fuel filter switch and turn power on. Verify ENG OIL FILTER caution light is extinguished.

96.8.6.5 Turn electrical power off.

96.8.7 Operational Check – Engine Fuel Pump Caution Light

96.8.7.1 Disconnect wires Q17B18 and Q17C18 from terminal of forward engine fuel pump pressure switch (bottom of engine FCU).

96.8.7.2 Apply electrical power to helicopter electrical system. Verify ENG FUEL PUMP caution light is extinguished.

96.8.7.3 Connect two wires together but not to ground or pressure switch (aft pressure switch is connected to aircraft system wire Q17B18). Verify ENG FUEL PUMP caution light illuminates.

96.8.7.4 Separate the two wires so wire Q17B18 is not touching anything. Verify ENG FUEL PUMP caution light is extinguished.

96.8.7.5 Connect wire Q17B18 to forward pressure switch (free end of wire Q17C18 is not connected). Verify ENG FUEL PUMP caution light illuminates.

96.8.7.6 Connect both wires (Q17B18 and Q17C18) to forward pressure switch. Verify ENG FUEL PUMP caution light remains illuminated.

96.8.7.7 Turn electrical power off.

96.8.8 Operational Check – Engine Fuel Valve Caution Light

96.8.8.1 Apply electrical power to helicopter electrical system.

96.8.8.2 Set ENGINE FUEL VALVE switch to ON. Verify FUEL VALVE caution light illuminates momentarily and then extinguishes.

96.8.8.3 Set ENGINE FUEL VALVE switch to OFF. Verify FUEL VALVE caution light illuminates momentarily and then extinguishes.

96.8.8.4 Turn electrical power off.

96.8.9 Operational Check – Fuel Boost Caution Light

96.8.9.1 Disconnect wire Q67A22 from terminal #3 of terminal board TB11 (LH fuel sump plate).

96.8.9.2 Apply electrical power to helicopter electrical system. Verify LH FUEL BOOST caution light is extinguished. Turn electrical power off.

96.8.9.3 Connect wire Q67A22 to terminal #3 of terminal board TB11 (LH fuel sump plate).

96.8.9.4 Apply electrical power to helicopter electrical system. Verify LH FUEL BOOST caution light is illuminated. Turn electrical power off.

96.8.9.5 Disconnect wire Q68A22 from terminal #3 of terminal board TB10 (RH fuel sump plate).

96.8.9.6 Apply electrical power to helicopter electrical system. Verify RH FUEL BOOST caution light is extinguished. Turn electrical power off.

96.8.9.7 Connect wire Q68A22 to terminal #3 of terminal board TB10 (RH fuel sump plate).

96.8.9.8 Apply electrical power to helicopter electrical system. Verify RH FUEL BOOST caution light is illuminated. Turn electrical power off.

96.8.10 Operational Check – Fuel Filter Caution Light

96.8.10.1 Disconnect connector (P156) from airframe fuel filter pressure switch (S94).

• COPYRIGHT © 2023 BY EAGLE COPTERS MAINTENANCE LTD •
THIS DOCUMENT IS PRIVATE AND CONFIDENTIAL AND IS SUPPLIED ON THE EXPRESS CONDITION THAT IT IS NOT TO BE USED FOR ANY PURPOSE OR COPIED OR COMMUNICATED TO ANY OTHER PERSON WITHOUT WRITTEN PERMISSION FROM EAGLE COPTERS MAINTENANCE LTD.

CHAPTER 96 – ELECTRICAL SYSTEM (96-00-00)

Connect a temporary short between terminals A and B.

96.8.10.2 Apply electrical power to helicopter electrical system. Verify FUEL FILTER caution light illuminates.

96.8.10.3 Turn electrical power off. Remove temporary short.

96.8.10.4 Connect connector (P156) to airframe fuel filter switch (S94) and turn power on. Verify FUEL FILTER caution light is extinguished.

96.8.10.5 Turn electrical power off.

96.8.11 Operational Check – Fuel Low Caution Light

96.8.11.1 Procedure for low fuel level.

NOTE
If there is little or no fuel in cells, low fuel level switches (S88 and S89) will be closed and FUEL LOW caution lights will be illuminated.

96.8.11.1.1 Disconnect wire E39A22 from terminal #4 of terminal board TB11 (LH fuel sump plate).

96.8.11.1.2 Apply electrical power to helicopter electrical system. Verify LH FUEL LOW caution light is extinguished. Turn electrical power off.

96.8.11.1.3 Connect wire E39A22 to terminal #4 of terminal board TB11 (LH fuel sump plate).

96.8.11.1.4 Turn electrical power on. Verify LH FUEL LOW caution light is illuminated. Turn electrical power off.

96.8.11.1.5 Disconnect wire E40A22 from terminal #4 of terminal board TB10 (RH fuel sump plate).

96.8.11.1.6 Turn electrical power on. Verify RH FUEL LOW caution light is extinguished. Turn electrical power off.

96.8.11.1.7 Connect wire E40A22 to terminal #4 of terminal board TB10 (RH fuel sump plate).

96.8.11.1.8 Turn electrical power on. Verify RH FUEL LOW caution light is illuminated. Turn electrical power off.

96.8.11.2 Procedure for fuel in cells above 10% (more than 150 pounds).

NOTE
If cells have more than 10% fuel (150 pounds), low fuel level switches (S88 and S89) will be open and FUEL LOW caution lights will be extinguished.

96.8.11.2.1 Disconnect wire E39A22 from terminal #4 of terminal board TB11 (LH fuel sump plate). Temporarily connect wire to airframe structure (ground).

96.8.11.2.2 Apply electrical power to helicopter electrical system. Verify LH FUEL LOW caution light is illuminated. Turn electrical power off.

96.8.11.2.3 Remove wire E39A22 from ground and connect to terminal #4 of terminal board TB11 (LH fuel sump plate).

96.8.11.2.4 Turn electrical power on. Verify LH FUEL LOW caution light is extinguished. Turn electrical power off.

96.8.11.2.5 Disconnect wire E40A22 from terminal #4 of terminal board TB10 (RH fuel sump plate). Temporarily connect wire to airframe structure (ground).

96.8.11.2.6 Turn electrical power on. Verify RH FUEL LOW caution light is illuminated. Turn electrical power off.

96.8.11.2.7 Remove wire E40A22 from ground and connect to terminal #4 of terminal board TB10 (RH fuel sump plate).

• COPYRIGHT © 2023 BY EAGLE COPTERS MAINTENANCE LTD •
THIS DOCUMENT IS PRIVATE AND CONFIDENTIAL AND IS SUPPLIED ON THE EXPRESS CONDITION THAT IT IS NOT TO BE USED FOR ANY PURPOSE OR COPIED OR COMMUNICATED TO ANY OTHER PERSON WITHOUT WRITTEN PERMISSION FROM EAGLE COPTERS MAINTENANCE LTD.

96.8.11.2.8 Turn electrical power on. Verify RH FUEL LOW caution light is extinguished. Turn electrical power off.

96.8.12 Operational Check – Governor Manual Control Caution Light

GOV MANUAL caution light is checked as a portion of fuel control valve test (paragraph 96.10.7).

96.8.13 Operational Check – Engine Chip Detector Caution Light

96.8.13.1 Disconnect connector (P290S) from engine chip connector. Connect a temporary short between terminal A and ground.

96.8.13.2 Apply electrical power to helicopter electrical system. Verify CHIP ENGINE caution light is illuminated. Turn electrical power off.

96.8.13.3 Remove temporary short and connect connector (P290S) to chip detector.

96.8.14 Operational Check – #1 Hydraulic Caution Light System

The #1 HYDR SYST caution light is checked as part of hydraulic bypass circuitry (paragraph 96.11.5).

96.8.15 Operational Check – #2 Hydraulic Caution Light System

The #2 HYDR SYST caution light is checked as part of hydraulic bypass circuitry (paragraph 96.11.5).

96.8.16 Operational Check – Transmission Oil Pressure Caution Light

SPECIAL TEST EQUIPMENT

TYPE OR MODEL	NOMENCLATURE
Barfield Model 2311F-S or Equivalent	Pressure Tester 0-150 psi. (0-1034 KPa)

96.8.16.1 Disconnect transmission oil pressure line from transmission oil pressure switch and transmitter manifold. Connect pressure tester to manifold.

96.8.16.2 Apply electrical power to helicopter electrical system.

96.8.16.3 Apply pressure with pressure tester to pressure switch. Verify XMSN PRESS caution light extinguishes at 38 psig (262 kPa) maximum.

96.8.16.4 Relieve pressure on transmission manifold. Verify XMSN OIL PRESS caution light illuminates at 30 ± 3 psig (206.85 ± 20.69 kPa).

96.8.16.5 Turn electrical power off.

96.8.16.6 Disconnect tester. Connect pressure line to transmission manifold.

96.8.17 Operational Check – Inverter No.1 Caution Light System

#1 INVERTER caution light system is checked as a portion of inverter circuitry (paragraph 96.4.7).

96.8.18 Operational Check – Inverter No.2 Caution Light System

#2 INVERTER caution light system is checked as a portion of inverter circuitry (paragraph 96.4.7).

• COPYRIGHT © 2023 BY EAGLE COPTERS MAINTENANCE LTD •
THIS DOCUMENT IS PRIVATE AND CONFIDENTIAL AND IS SUPPLIED ON THE EXPRESS CONDITION THAT IT IS NOT TO BE USED FOR ANY PURPOSE OR COPIED OR COMMUNICATED TO ANY OTHER PERSON WITHOUT WRITTEN PERMISSION FROM EAGLE COPTERS MAINTENANCE LTD.

96.8.19 Operational Check – Transmission Chip Detector Caution Light System

NOTE

Helicopters were initially equipped with transmission chip Detector (E1) only. Helicopters with these early model Transmissions that have been modified by TB 212-80-35 and helicopters with 212-040-001-059 and subsequent transmissions are provided with additional chip detectors (E16) and (E17) and chip detector indicators (DS50), (DS51), and (DS52).

96.8.19.1 Apply electrical power to helicopter electrical system.

96.8.19.2 Ensure XMSN CHIP POS IND circuit breaker is closed. Verify three chip indicators (if installed) on right side of pedestal show all black segments.

96.8.19.3 Connect a temporary short between terminal of transmission sump chip detector and ground. Verify CHIP XMSN caution light illuminates. Verify XMSN CHIP IND SUMP indicator (if installed) on right side of pedestal shows three white segments.

96.8.19.4 Remove temporary short and then reset XMSN CHIP IND SUMP indicator (if installed) (turn clockwise) to show all black segments. Verify CHIP XMSN caution light is extinguished.

96.8.19.5 Connect a temporary short between terminal of transmission planetary chip detector (if installed) and ground. Verify CHIP XMSN caution light illuminates. Verify XMSN CHIP IND PLNTY indicator (if installed) on right side of pedestal shows three white segments.

96.8.19.6 Remove temporary short and then reset XMSN CHIP IND PLNTY indicator (if installed) (turn clockwise) to show all black segments. Verify CHIP XMSN caution light is extinguished.

96.8.19.7 Connect a temporary short between terminal of transmission upper mast chip detector (if installed) and ground. Verify CHIP XMSN caution light illuminates. Verify XMSN CHIP IND UPPER MAST indicator (if installed) on right side of pedestal shows three white segments.

96.8.19.8 Remove temporary short and then reset XMSN CHIP IND UPPER MAST indicator (if installed turn clockwise) to show all black segments. Verify CHIP XMSN caution light is extinguished.

96.8.19.9 Turn off electrical power.

96.8.20 Operational Check – Transmission Oil Temperature Caution Light

96.8.20.1 Connect a temporary short between stud on top of transmission oil temperature switch and ground.

96.8.20.2 Apply electrical power to helicopter electrical system. Verify XMSN OIL TEMP caution light illuminates.

96.8.20.3 Remove temporary short. Verify XMSN OIL TEMP caution light is extinguished.

96.8.20.4 Turn electrical power off.

96.8.21 Operational Check – Intermediate Gearbox Chip Detector Caution Light

96.8.21.1 Apply electrical power to helicopter electrical system.

96.8.21.2 Connect a temporary short between terminal of intermediate gearbox chip detector and ground. Verify CHIP 42° GB caution light illuminates.

96.8.21.3 Remove temporary short. Verify CHIP 42° GB caution light is extinguished.

96.8.21.4 Turn electrical power off.

• COPYRIGHT © 2023 BY EAGLE COPTERS MAINTENANCE LTD •
THIS DOCUMENT IS PRIVATE AND CONFIDENTIAL AND IS SUPPLIED ON THE EXPRESS CONDITION THAT IT IS NOT TO BE USED FOR ANY PURPOSE OR COPIED OR COMMUNICATED TO ANY OTHER PERSON WITHOUT WRITTEN PERMISSION FROM EAGLE COPTERS MAINTENANCE LTD.

96.8.22 Operational Check – Tail Rotor Gearbox Chip Detector Caution Light

96.8.22.1 Apply electrical power to helicopter electrical system.

96.8.22.2 Connect a temporary short between terminal of tail rotor gearbox chip detector and ground. Verify CHIP 90° GB caution light illuminates.

96.8.22.3 Remove temporary short. Verify CHIP 90° GB caution light is extinguished.

96.8.22.4 Turn electrical power off.

96.8.23 Operational Check – External Power Caution Light

96.8.23.1 Set BATTERY switch to ON.

96.8.23.2 Open external power access door. Verify EXTERNAL PWR caution light illuminates.

96.8.23.3 Close external power access door. Verify EXTERNAL PWR caution light is extinguished.

96.8.23.4 Set BATTERY switch to OFF.

96.8.24 Operational Check – Passenger Door Lock Caution Light

96.8.24.1 Apply electrical power to helicopter electrical system.

96.8.24.2 Close and latch both passenger doors. Verify PASS. DOOR caution light is extinguished.

96.8.24.3 Open left passenger door. Verify PASS. DOOR caution light illuminates.

96.8.24.4 Close and latch left passenger door. Verify PASS. DOOR caution light extinguishes.

96.8.24.5 Open right passenger door. Verify PASS. DOOR caution light illuminates.

96.8.24.6 Close and latch right passenger door. Verify PASS. DOOR caution light extinguishes.

96.8.24.7 Turn electrical power off.

96.8.25 Operational Check – Cargo Door Lock Caution Light

96.8.25.1 Apply electrical power to helicopter electrical system.

96.8.25.2 Close and latch cargo compartment door. Verify CARGO DOOR caution light is extinguished.

96.8.25.3 Open cargo compartment door. Verify CARGO DOOR caution light illuminates.

96.8.25.4 Close and latch cargo compartment door. Verify CARGO DOOR caution light is extinguishes.

96.8.25.5 Turn electrical power off.

96.8.26 Adjustment Procedure – Passenger Door Lock And Cargo Door Lock Switches

96.8.26.1 Passenger door lock procedure.
96.8.26.1.1 Gain access to switches S71 & S72.

96.8.26.1.2 Slowly close either passenger door and ensure switch is being activated by switch lever.

96.8.26.1.3 If switch is not activated by switch lever, adjust switch bracket (with door in closed position) for 0.12 inch nominal switch lever travel.

NOTE

If switch is activated by lever and Pass. DOOR caution light is illuminated, perform electrical continuity check of the system. Repair wire or replace and adjust door switch.

• COPYRIGHT © 2023 BY EAGLE COPTERS MAINTENANCE LTD •
THIS DOCUMENT IS PRIVATE AND CONFIDENTIAL AND IS SUPPLIED ON THE EXPRESS CONDITION THAT IT IS NOT TO BE USED FOR ANY PURPOSE OR COPIED OR COMMUNICATED TO ANY OTHER PERSON WITHOUT WRITTEN PERMISSION FROM EAGLE COPTERS MAINTENANCE LTD.

96.8.26.2 Cargo door lock procedure

96.8.26.2.1 Gain access to switch S82.

96.8.26.2.2 Slowly close the cargo door and ensure that CARGO DOOR caution light extinguishes.

96.8.26.2.3 If switch is not activated by door lock lever, loosen screws (3) on switch mounting plate and adjust mounting plate until switch activates by door lock lever.

96.8.27 Operational Check – Battery Caution Light System

BATTERY CAUTION light system is checked as part of battery system (paragraph 96.3.7).

96.8.28 Operational Check – Heater Overheat Caution Light

96.8.28.1 Apply electrical power to helicopter electrical system.

96.8.28.2 Connect a temporary short between wire H26A22 of heater overheat switch (forward) and ground. Verify HEATER O/HEAT caution light illuminates.

96.8.28.3 Remove temporary short and verify that HEATER O/HEAT caution extinguishes.

96.8.28.4 Turn electrical power off.

96.8.29 Operational Check – Heater Air Line Caution Light

96.8.29.1 Disconnect heater control line pressure switch connector (P223).
*(**NOTE:** This switch should not be installed in a standard EAGLE SINGLE heater installation).*

96.8.29.2 Apply electrical power to helicopter electrical system.

96.8.29.3 Connect a temporary short between pins A. and B. of heater control line pressure switch connector (P223). Select HEATER/ AIR CONDITIONER SYSTEM SELECTOR switch (S189) to HEATER. Verify HEATER AIR LINE caution light illuminates.

96.8.29.4 Remove temporary short and verify that HEATER AIR LINE caution extinguishes.

96.8.29.5 Connect heater control line pressure switch connector (P223) (if pressure switch is installed, otherwise secure connector and go to step 96.8.29.6). Verify HEATER AIR LINE caution light illuminates.

96.8.29.6 Turn electrical power off.

96.8.30 Caution Panel Light

The CAUTION PANEL light segment mounted in the master caution annunciator panel serves to illuminate if applied voltage to all other segments within the panel drops below 75% rated voltage with panel mounted BRIGHT/DIM switch in either position. Dimming is not required for CAUTION PANEL caution light segment.

96.8.31 Operational Check – Caution Panel Light

96.8.31.1 Apply electrical power to the helicopter electrical system.

96.8.31.2 Select the MASTER CAUTION TEST switch on the overhead console to TEST.
96.8.31.3 Verify CAUTION PANEL segment on master caution annunciator panel is illuminated bright and no other segments are illuminated. Also both MASTER CAUTION lights on the instrument panels should be illuminated.

96.8.31.4 Release the test switch and it should return to NORMAL position and CAUTION PANEL light should extinguish.

NOTE
Upon releasing test switch, segments on the annunciator panel may illuminate if a fault is detected by the associated system.

• COPYRIGHT © 2023 BY EAGLE COPTERS MAINTENANCE LTD •
THIS DOCUMENT IS PRIVATE AND CONFIDENTIAL AND IS SUPPLIED ON THE EXPRESS CONDITION THAT IT IS NOT TO BE USED FOR ANY PURPOSE OR COPIED OR COMMUNICATED TO ANY OTHER PERSON WITHOUT WRITTEN PERMISSION FROM EAGLE COPTERS MAINTENANCE LTD.

CHAPTER 96 – ELECTRICAL SYSTEM (96-00-00)

96.8.32 RPM Limit Warning (Lights and Audio)

The RPM Limit Warning system consists of an RPM limit control box (Z1), two ENGINE RPM warning lights and two ROTOR RPM caution lights, one each at each pilot station. The ENGINE RPM warning light will illuminate during a condition of low engine rpm while the ROTOR RPM caution light will illuminate during a condition of either high or low rotor rpm as sensed by the control box via inputs from the engine and rotor tachometer sensing circuits. The control box also provides and audio control signal (28VDC) which causes an audio tone to be present in the pilots and copilots headsets whenever high or low rotor rpm or a low engine rpm condition exists. The audio tone may be shutoff by using the ROTOR RPM switch on the Miscellaneous control panel. The switch will automatically reset to the audio position when rotor and engine rpm rise above the lower limits.

NOTE

ENGINE RPM and ROTOR RPM lights are not dimmable and are non re-settable.

RPM limit warning system is adjusted upon installation. Re-adjustment may be required whenever a tachometer generator or indicator is replaced due to tolerances on tachometer components.

96.8.33 Operational Check – RPM Limit Warning System

The testing and alignment of the rpm warning system should be accomplished during ground run-up.

NOTE

To facilitate adjustment of rpm warning detector box, the box may be removed from the helicopter and reconnected to the helicopter power by means of an extended cable.

NOTE

To increase the rpm at which the warning light will illuminate, turn either R1, R2, or R3 clockwise. One half turn of the potentiometer will cause a change of five percent rotor rpm or one percent engine rpm.

(Do not adjust R4 and R5. These are bench check adjustments and should be performed by a properly equipped maintenance facility.)

96.8.33.1 Place helicopter in normal ground run operation at ground idle.

96.8.33.2 Position the LOW RPM audio switch on the pedestal to AUDIO.

96.8.33.3 Using the dual tachometer indicator as a reference, adjust for a rotor speed of approximately 100% RPM (corresponds to 324 rotor rpm and 6600 engine rpm) and ascertain that the amber ROTOR RPM warning lights (pilot and copilot) and the red ENGINE RPM warning lights (pilot and copilot) on the instrument panel are not illuminated. Verify that the audio warning signal is not audible in either the pilot or copilot headset.

96.8.33.4 Decrease engine speed very slowly to the point where the amber ROTOR RPM lights illuminate and a swept-frequency audio signal (series of audio bursts) is audible in both the pilot and copilot headsets. This point should be at a rotor speed (NR) of 96% to 97%; (311 to 314 rotor rpm) preferably 97%.

96.8.33.5 Decrease engine speed very slowly to the point where the red ENGINE RPM warning lights illuminate. This point should be at an engine speed (N2) of 88% to 91%.

96.8.33.6 Position the LOW RPM audio switch to OFF. The audio signal should cease.

96.8.33.7 Adjust for an engine speed (N2) of 88% or below. Verify the red ENGINE RPM warning lights and the amber ROTOR RPM

• COPYRIGHT © 2023 BY EAGLE COPTERS MAINTENANCE LTD •
THIS DOCUMENT IS PRIVATE AND CONFIDENTIAL AND IS SUPPLIED ON THE EXPRESS CONDITION THAT IT IS NOT TO BE USED FOR ANY PURPOSE OR COPIED OR COMMUNICATED TO ANY OTHER PERSON WITHOUT WRITTEN PERMISSION FROM EAGLE COPTERS MAINTENANCE LTD.

warning lights are illuminated and the audio signal is not audible in either pilot or copilot headset.

96.8.33.8 Increase engine speed very slowly and verify that the red ENGINE RPM warning lights extinguish above 91% engine rpm (N2). Continue to increase engine speed very slowly and verify that the amber ROTOR RPM warning lights extinguish above 97% rotor rpm (NR). Verify the LOW RPM audio switch returns automatically to the AUDIO position when the amber ROTOR RPM lights extinguish.

96.8.33.9 With rotor in flat pitch set GOVERNOR switch to MANUAL (**CAUTION:** refer to FMS-D212-725-1, engine run-up and systems checks, engine fuel control). Slowly increase throttle until the amber ROTOR RPM warning lights illuminate. The warning lights should illuminate at a rotor speed (NR) of 102% to 104.5% (330 to 339 rotor rpm which corresponds to an engine speed (N2) of 6700 to 6900 rpm). Verify that the audio warning signal is not audible in either the pilot or copilot headset.

96.8.33.10 Return GOVERNOR switch to AUTO. (**CAUTION:** refer to FMS-D212-725-1, engine run-up and systems checks, engine fuel control).

96.8.34 Adjustment Procedure – RPM Limit Warning System (Low RPM Warning)

NOTE

IF the RPM limit warning system does not meet the requirements of paragraph 96.8.32, the system shall be adjusted in accordance with the following procedures.

96.8.34.1 Loosen the screws and slide the cover strips to expose the potentiometers.

96.8.34.2 Install a jumper lead between TP7 and TP8 to de-activate the engine LOW RPM signal.

96.8.34.3 Increase rotor speed to approximately 100% (324 rotor RPM and 6600 engine RPM).

96.8.34.4 Slowly decrease rotor speed to 97%, approximately 314 rotor RPM.

96.8.34.5 If, following step 96.8.34.4, the amber ROTOR RPM caution light is illuminated, turn R1 slowly counterclockwise until the warning light just extinguishes and then very slowly clockwise until the light illuminates again. If the amber ROTOR RPM caution light is extinguished, turn R1 slowly clockwise until the light just illuminates.

96.8.34.6 Vary the rotor speed slowly above and below 97% while observing the light. Verify that the warning occurs at a rotor speed of 96 to 97%. If not, repeat steps 96.8.34.4 through 96.8.34.6.

96.8.34.7 Remove the jumper between TP7 and TP8 and install the jumper between TP6 and TP8 to deactivate the rotor LOW RPM signal.

96.8.34.8 Adjust for an engine speed of 89.5 % (approximately 5900 engine RPM and 290 rotor RPM).

96.8.34.9 If, following step 96.8.34.8, the red ENGINE RPM low warning light is illuminated, turn R3 slowly counterclockwise until the light just extinguishes, then very slowly clockwise until the light again illuminates. If, following step 96.8.34.8, the warning light is extinguished, turn R3 very slowly clockwise until the light just illuminates.

96.8.34.10 Vary the engine speed above and below 91% while observing the warning light. Verify that the warning occurs at 88 to 91%. If light does not illuminate between 88 and 91%, repeat steps 96.8.34.8 through 96.8.34.10.

96.8.34.11 Remove jumper.

• COPYRIGHT © 2023 BY EAGLE COPTERS MAINTENANCE LTD •
THIS DOCUMENT IS PRIVATE AND CONFIDENTIAL AND IS SUPPLIED ON THE EXPRESS CONDITION THAT IT IS NOT TO BE USED FOR ANY PURPOSE OR COPIED OR COMMUNICATED TO ANY OTHER PERSON WITHOUT WRITTEN PERMISSION FROM EAGLE COPTERS MAINTENANCE LTD.

96.8.34.12 Close detector cover strips and tighten screws if high rotor rpm adjustment is not required.

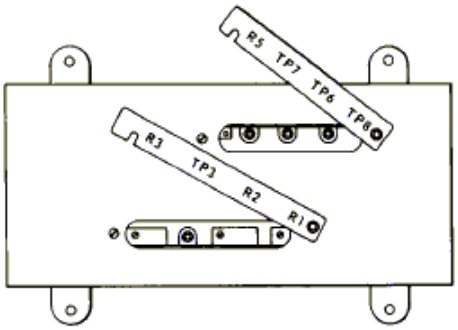

RPM LIMIT WARNING DETECTOR (SATURN)



"JUMPER" – 6 INCH 22 GA WIRE
(2) 490–102 TIP PLUGS
HERMAN H SMITH OR EQUV

Figure 96-7. RPM Limit Detector

96.8.35 Adjustment Procedure – RPM Limit Warning System (High Rotor RPM Warning)

NOTE

IF the RPM limit warning system does not meet the requirements of paragraph 96.8.32, the system shall be adjusted in accordance with the following procedures.

96.8.35.1 With the rotor in flat pitch and the governor set to MANUAL, slowly increase throttle until the rotor speed is at 102 to 104.5% (330 to 339 rotor RPM).

NOTE

The maximum allowable T5317 engine output shaft speed per FAA Approved Engine Manuals is 6634 rpm (101% N2) for normal flight operation, but when torque pressure is 15 psi or less, the engine overspeed limit is extended to 6900 rpm (104.5% N2).

96.8.35.2 Loosen screws and slide cover strips to expose potentiometers.

96.8.35.3 If, following step 96.8.35.1, the rotor RPM caution light is illuminated, turn R2 clockwise until the light just extinguishes, then very slowly counterclockwise until the light just illuminates. If, following step 96.8.35.1, the rotor RPM caution light is extinguished, turn R2 very slowly counterclockwise until the warning light just illuminates.

96.8.35.4 Vary the engine speed to verify that the warning light illuminates between 102 to 104.5%. If light does not illuminate, repeat steps 96.8.35.3 and 96.8.35.4.

96.8.35.5 Close detector cover strips and tighten screws.

96.8.36 Fire Detection Warning System

NOTE

S/Ns 30687, 30817 and 30599 are fitted with ENG FIRE "T" handles. All S/Ns except 30687, 30817 and 30599 are fitted with ENG FIRE and FIRE EXTING switch-lights

96.8.36.1 The fire detection system consists of 2 control amplifiers (one for the engine fire detectors and one for cargo smoke detector), mounted in the nose compartment, three infrared detectors strategically mounted in the engine compartment, a smoke detector located in the cargo compartment and a fire handle mounted in the center instrument panel or ENG FIRE switch-lights located in front of each crew station (pilot and copilot). The system utilizes infrared radiation as a principle of operation. Heat level or rate of heat level rise has no effect on the sensing method. The fire handle or ENG FIRE switch-light will illuminate when any one of the detectors sense the infrared radiation of a fire. Upon elimination of the fire the entire system automatically returns to its normal state and is again ready to detect. The

• COPYRIGHT © 2023 BY EAGLE COPTERS MAINTENANCE LTD •
THIS DOCUMENT IS PRIVATE AND CONFIDENTIAL AND IS SUPPLIED ON THE EXPRESS CONDITION THAT IT IS NOT TO BE USED FOR ANY PURPOSE OR COPIED OR COMMUNICATED TO ANY OTHER PERSON WITHOUT WRITTEN PERMISSION FROM EAGLE COPTERS MAINTENANCE LTD.

control amplifier is designed with a fail-safe feature so that a shorted or open detector circuit will have no effect on normal operation and will not cause illumination of the fire handle or the ENG FIRE switch-lights.

96.8.36.2 Pressing either ENG FIRE switch-light will cause both FIRE EXTING switch-lights to illuminate, indicating that the fire extinguisher system is armed. Either FIRE EXTING switch-light may be used to discharge the fire bottle.

96.8.36.3 Three test switches are mounted on the instrument panel for testing the three infrared detector circuits and verifying continuity through the detectors. Test switch 1 confirms the forward detector circuit. Test switch 2 confirms the aft left detector circuit and test switch 3 confirms the aft right circuit. Pressing

96.8.37 Operational Check – Engine Fire Detection System

96.6.37.1 Perform operational check as follows:

96.6.37.1.1 Apply electrical power to helicopter electrical system.

96.6.37.1.2 Close the FIRE DET circuit breaker.

96.6.37.1.3 Press ENG FIRE DET/DET 1 switch.

96.8.37.1.4 Verify the ENG FIRE handle or ENG FIRE switch-light illuminates.

96.8.37.1.5 Release the ENG FIRE DET/DET 1 switch.

96.8.37.1.6 Verify the ENG FIRE handle or ENG FIRE switch-light extinguishes.

96.8.37.1.7 Repeat steps 96.8.37.1.3 to 96.8.37.1.6 for ENG FIRE DET/DET 2 and 3 switches.

96.8.37.1.8 Remove electrical power for the helicopter.

96.8.38 Fire Detection Warning – Cargo Compartment

The smoke detector is a closed assembly, solid-state, electronic component and a light sensitive detector. The smoke detector, located in the forward end of the cargo compartment roof, is protected from cargo damage by a protective guard. When smoke reduces the light transmission in the cargo compartment 30 to 35% below that of clear air, the smoke detector will send a signal to the control amplifier. This will cause both CARGO FIRE lights (one at each pilot station) to illuminate intermittently (flash on and off).

96.8.39 Operational Check – Cargo Fire Detection Warning System

96.8.39.1 Apply electrical power to helicopter electrical system.

NOTE

If BAGGAGE FIRE warning light does not illuminate during test, verify serviceability of beacon and test lamps located in baggage compartment smoke detector. Replace defective lamps(s).

96.8.39.2 Close the CARGO COMP FIRE DET circuit breaker.

96.8.39.3 Press CARGO FIRE DETECTOR test switch. Verify the CARGO FIRE warning lights illuminate and flash.

96.8.39.4 Release CARGO FIRE DETECTOR test switch. Verify CARGO FIRE warning lights extinguish.

96.8.39.5 Introduce smoke into cargo compartment near smoke detection unit. Verify CARGO FIRE warning lights illuminate and flash.

• COPYRIGHT © 2023 BY EAGLE COPTERS MAINTENANCE LTD •
THIS DOCUMENT IS PRIVATE AND CONFIDENTIAL AND IS SUPPLIED ON THE EXPRESS CONDITION THAT IT IS NOT TO BE USED FOR ANY PURPOSE OR COPIED OR COMMUNICATED TO ANY OTHER PERSON WITHOUT WRITTEN PERMISSION FROM EAGLE COPTERS MAINTENANCE LTD.

96.8.39.6 Remove smoke or allow it to dissipate into surrounding air. Verify CARGO FIRE warning lights extinguish.

96.8.40 Hydraulic Filter Clogged Warning

Filter clogged warning switches are activated by hydraulic differential pressure (70 psi) from any of four partially clogged filters thus causing the hydraulic filter clog indicator to show a red dot. If filters are not clogged, switch contacts are open and indicator shows a green dot at the viewing site.

NOTE

Some helicopters may have installed optional indicators which show black for no clog and black and white for a clogged indication. Reset for these indicators is by turning the outer bezel ¼ of a turn.

If any of the four filters become partially clogged, contacts of either switch makes continuity from circuit breaker to activate indicator which show a red dot at the viewing site and remains reset until reset at both the switch and the indicator.

96.8.41 Operational Check – Hydraulic Filter Clogged Warning

NOTE

This check may be done in conjunction With 96.11.5 OPERATIONAL CHECK – HYDRAULIC BYPASS

NOTE

Some helicopters may have installed optional indicators which show black for no clog and black and white for a clogged indication. Reset for these indicators is by turning the outer bezel ¼ of a turn.

96.8.41.1 Apply electrical power to helicopter electrical system.

96.8.41.2 Close the HYD No.2 TEMP circuit breaker. Verify hydraulic filter clogged indicator is green (or all black for the optional indicators).

96.8.41.3 Disconnect connector (P174) from hydraulic No.1 integrated valve assembly. Connect a temporary short between pins B. and C. Verify hydraulic filter clogged indicator turns red (or black and white for the optional indicators).

96.8.41.4 Remove temporary short and connect connector (P174) to hydraulic No.1 integrated valve assembly. Reset hydraulic filter clogged indicator by pushing button on indicator and verify indicator turns and remains green (or all black for the optional indicators).

96.8.41.5 Disconnect connector (P173) from hydraulic No.2 integrated valve assembly. Connect a temporary short between pins B. and C. Verify hydraulic filter clogged indicator turns red (or black and white for the optional indicators).

96.8.41.6 Remove temporary short and connect connector (P13) to hydraulic No.2 integrated valve assembly. Reset hydraulic filter clogged indicator by pushing button on indicator and verify indicator turns and remains green (or all black for the optional indicators).

96.8.41.7 Turn electrical power off.

96.9 EXTERIOR LIGHTING SYSTEMS

96.9.1 Exterior Lighting Systems

The exterior lighting systems include utility lights, position lights, anti-collision lights, searchlight and landing light.

96.9.2 Utility Lights

The utility light circuit is protected by the UTILITY LT 5 amp circuit breaker and controlled by the UTILITY LIGHT switch. Left and right utility lights illuminate simultaneously.

• COPYRIGHT © 2023 BY EAGLE COPTERS MAINTENANCE LTD •
THIS DOCUMENT IS PRIVATE AND CONFIDENTIAL AND IS SUPPLIED ON THE EXPRESS CONDITION THAT IT IS NOT TO BE USED FOR ANY PURPOSE OR COPIED OR COMMUNICATED TO ANY OTHER PERSON WITHOUT WRITTEN PERMISSION FROM EAGLE COPTERS MAINTENANCE LTD.

96.9.3 Operational Check – Utility Light System.

96.9.3.1 Apply electrical power to helicopter electrical system.

96.9.3.2 Set UTILITY LIGHT switch to ON. Verify right and left utility lights illuminate.

96.9.3.3 Set UTILITY LIGHT switch to OFF. Verify right and left utility lights extinguish.

96.9.3.4 Turn electrical power off.

96.9.4 Position Lights

The position lights system serves to give constant navigation signals during flight. The lights, fuselage and tail, are powered from the 28VDC Essential bus protected by the POSN LT circuit breaker, and controlled by EXTERIOR LIGHTS POSITION switch. All position lights illuminate full brilliance while energized.

96.9.5 Operational Check – Position Light System

96.9.5.1 Apply electrical power to helicopter electrical system.

96.9.5.2 Set EXTERIOR LIGHTS/ POSITION switch to ON. Verify right upper and left upper, right lower and left lower, and both tail position lights illuminate.

96.9.5.3 Set EXTERIOR LIGHTS/ POSITION switch to OFF. Verify right upper and left upper, right lower and left lower, and both tail position lights extinguish.

96.9.5.4 Turn electrical power off.

96.9.6 Anti-collision Lights

When the ANTI COLL light switch is set to BOTH, both light assemblies flash at a rate of approximately 80 flashes per minute. When the ANTI COLL light switch is set to UPPER, only the upper light assembly flashes. The upper light assembly is mounted in the tailpipe fairing and the lower light is mounted on the bottom of the fuselage.

NOTE

When fixed float landing gear kit (BHT-212-14) is installed, the lower anti-collision light is moved to the tailboom provisioned mount and connected to the stowed electrical plug.

96.9.7 Operational Check – Anti-Collision Light System

96.9.7.1 Apply electrical power to helicopter electrical system.

96.9.7.2 Set EXTERIOR LIGHTS/ ANTI COLL switch to BOTH. Verify both upper and lower anti-collision lights are illuminated and flashing 80 to 90 times per minute.

96.9.7.3 Set EXTERIOR LIGHTS/ ANTI COLL switch to UPPER. Verify only upper light is illuminated and flashing 80 to 90 times per minute and lower anti-collision light is extinguished.

96.9.7.4 Set EXTERIOR LIGHTS/ANTI COLL switch to OFF. Verify both upper and lower anti-collision lights are extinguished.

96.9.7.5 Turn electrical power off.

96.9.8 Searchlight

The searchlight assembly includes one sealed beam type light, rotation motor, extend-retract motor, control relays, and limit switches. The SLT OFF/STOW switch controls light ON or OFF and STOW functions. The four-way searchlight SLT EXT/L/R/RETR switch controls extend, retract, rotate right, and rotate left motion of searchlight.

• COPYRIGHT © 2023 BY EAGLE COPTERS MAINTENANCE LTD •
THIS DOCUMENT IS PRIVATE AND CONFIDENTIAL AND IS SUPPLIED ON THE EXPRESS CONDITION THAT IT IS NOT TO BE USED FOR ANY PURPOSE OR COPIED OR COMMUNICATED TO ANY OTHER PERSON WITHOUT WRITTEN PERMISSION FROM EAGLE COPTERS MAINTENANCE LTD.

96.9.9 Operational Check – Searchlight System

96.9.9.1 Apply electrical power to helicopter electrical system.

96.9.9.2 Set four-way SLT switch on pilot collective stick to EXT and hold. Verify searchlight extends and is stopped by extension limit switch at approximately 120° extension.

96.9.9.3 Set four-way SLT switch to L. Verify searchlight rotates to the left.

96.9.9.4 Set four-way SLT switch to R. Verify searchlight rotates to the right.

96.9.9.5 Set SLT/OFF/STOW switch on pilot collective stick to SLT. Verify searchlight illuminates.

96.9.9.6 Open SCHLT PWR and SCHLT CONT circuit breakers. Verify searchlight is extinguished and four-way SLT switch does not operate searchlight.

96.9.9.7 Close SCHLT CONT circuit breaker. Set four-way SLT switch to RETR and hold. Verify searchlight retracts and stops in a position flush with aircraft surface (may be rotated).

96.9.9.8 Close SCHLT PWR circuit breaker. Verify searchlight illuminates.

96.8.9.9 Extend searchlight (four-way SLT switch). Set SLT/OFF/STOW switch to STOW. Verify that searchlight is extinguished and retracts and rotates to stow position.

96.9.9.10 Turn electrical power off.

96.9.10 Landing Light

The landing light assembly includes one sealed beam type light, and extend-retract motor, control relay, and limit switches. The LDG LT ON/OFF switch controls the ON and OFF functions. The three position LDG LT EXT/OFF/RET switch controls the extent and retract motion of the landing light.

96.9.11 Operational Check – Landing Light System

96.9.11.1 Apply electrical power to helicopter electrical system.

96.9.11.2 Set LDG LT EXT/OFF/RETR switch on pilot collective stick to EXT and hold. Verify landing light extends and is stopped by extension limit switch at approximately 120° extension.

96.9.11.3 Set LDG LT ON/OFF switch on pilot collective stick to ON. Verify landing light illuminates.

96.9.11.4 Open LT LDG PWR circuit breaker. Verify landing light is extinguished. Verify LDG LT EXT/OFF/RETR switch still operates landing light.

96.9.11.5 Close LT LDG PWR circuit breaker and open LT LDG CONT circuit breaker. Verify landing light is illuminated and LDG LT EXT/OFF/RETR switch will not operate landing light.

96.9.11.6 Close LT LDG CONT circuit breaker. Set LDG LT EXT/OFF/RETR switch to RETR. Verify that landing light remains illuminated and retracts and is stopped in stow position by retract limit switch.

96.9.11.7 Set LDG LT ON/OFF switch to OFF. Verify that landing light is extinguished.

96.9.11.8 Turn electrical power off.

• COPYRIGHT © 2023 BY EAGLE COPTERS MAINTENANCE LTD •
THIS DOCUMENT IS PRIVATE AND CONFIDENTIAL AND IS SUPPLIED ON THE EXPRESS CONDITION THAT IT IS NOT TO BE USED FOR ANY PURPOSE OR COPIED OR COMMUNICATED TO ANY OTHER PERSON WITHOUT WRITTEN PERMISSION FROM EAGLE COPTERS MAINTENANCE LTD.

CHAPTER 96 – ELECTRICAL SYSTEM (96-00-00)

96.10 ENGINE CONTROLS AND ACCESSORIES SYSTEMS

96.10.1 Engine Controls and Accessories Systems

Engine controls and accessories systems include fuel boost pumps, the fuel shutoff valve, the fuel control valve, governor rpm actuator, sump drain valves, idle stop release solenoid and the engine anti-icing system.

96.10.2 Fuel Boost Pumps

Two electrically operated fuel boost pumps are submerged, one each in the right and left fuel cells. Both boost pumps are energized from the Essential DC power bus through the RH FUEL BOOST circuit breaker and the LH FUEL BOOST circuit breaker. The pumps are controlled by either the LH BOOST PUMP switch or the RH BOOST PUMP switch which are located on the engine control panel.

96.10.3 Operational Check – Fuel Boost Pumps System

96.10.3.1 Apply electrical power to helicopter electrical system.

96.10.3.2 Set L/H BOOST PUMP switch, located on engine and fuel control panel, to ON. Verify fuel boost pump in left fuel cell is operating and LH FUEL BOOST caution light is extinguished.

96.10.3.3 Set ENGINE FUEL VALVE switch to ON. Verify FUEL VALVE caution light illuminates momentarily and then extinguishes. Verify FUEL PRESSURE reads upscale (AC power must be on if AC powered Indicator is installed).

96.10.3.4 Set RH BOOST PUMP switch, located on engine and fuel control panel, to ON. Verify fuel boost pump in right fuel cell is operating and R/H FUEL BOOST caution light is extinguished.

96.10.3.5 Set L/H BOOST PUMP switch to OFF. Verify fuel boost pump in left fuel cell stops operating and LH FUEL BOOST caution light illuminates. Verify FUEL PRESSURE still reads upscale (AC power must be on if AC powered indicator is installed).

96.10.3.6 Set ENGINE FUEL VALVE switch to OFF. Verify FUEL VALVE caution light illuminates momentarily and then extinguishes. Verify FUEL PRESSURE drops (may not go to zero immediately).

96.10.3.7 Set R/H BOOST PUMP switch to OFF. Verify fuel boost pump in right fuel cell stops operating and RH FUEL BOOST caution light illuminates.

96.10.3.8 Turn electrical power off.

96.10.4 Fuel Shutoff Valve

The fuel shutoff valve controls the flow of fuel to the engine. Power is supplied from the Essential DC bus through the FUEL VALVE circuit breaker. The fuel valve is normally controlled by the FUEL VALVE switch on the engine control panel.

96.10.5 Operational Check – Fuel Shutoff Valve System

NOTE

Due to addition of diode CR95 on engine fuel switch, FUEL VALVE caution light will illuminate when engine fuel switch position does not agree with fuel shutoff valve position.

96.10.5.1 Apply electrical power to helicopter electrical system.

96.10.5.2 Set ENGINE FUEL VALVE switch to ON. Verify engine fuel shutoff valve opens and FUEL VALVE caution light illuminates momentarily and then extinguishes.

96.10.5.3 Set ENGINE FUEL VALVE switch to OFF. Verify engine fuel shutoff valve closes and

• COPYRIGHT © 2023 BY EAGLE COPTERS MAINTENANCE LTD •
THIS DOCUMENT IS PRIVATE AND CONFIDENTIAL AND IS SUPPLIED ON THE EXPRESS CONDITION THAT IT IS NOT TO BE USED FOR ANY PURPOSE OR COPIED OR COMMUNICATED TO ANY OTHER PERSON WITHOUT WRITTEN PERMISSION FROM EAGLE COPTERS MAINTENANCE LTD.

FUEL VALVE caution light illuminates momentarily and then extinguishes.

96.10.5.4 Turn electrical power off.

96.10.6 Engine Fuel Control Valve

The engine fuel control solenoid valve provides a method of bypassing the engine fuel control governor. The solenoid valve is protected by a separate FUEL CONT circuit breaker. When the ENG GOV switch is in AUTO, the solenoid is de-energized, twist grip throttle control is manually set to full on and speed of the engine is controlled by full governor. When the ENG GOV switch is set to MANUAL, the solenoid is energized, the governor is bypassed, and the engine control is by manual twist grip operation. Setting the switch to MANUAL also provides a 28 VDC signal to the master caution panel and the GOV MAN legend is illuminated.

96.10.7 Operational Check – Engine Fuel Control Valve

96.10.7.1 Apply electrical power to helicopter electrical system.

96.10.7.2 Set ENGINE GOV switch to MANUAL. Verify engine fuel control valve opens to bypass condition (listen for click at FCU solenoid) and GOV MANUAL caution light illuminates.

96.10.7.3 Set ENGINE GOV switch to AUTO. Verify engine fuel control valve closes to normal position (listen for click at FCU solenoid) and GOV MANUAL caution light extinguishes.

96.10.7.4 Turn electrical power off.

96.10.8 Governor RPM Actuator

The governor rpm actuator allows the engine rpm to be adjusted over a small range centered about the value determined by the engine governor. The actuator has no affect in MANUAL mode. The system consists of a spring loaded center off, pilot and copilot RPM INCR/DECR switches and the linear actuator (B8). The circuit is powered through the 5 amp GOV CONT circuit breaker. When either pilot or copilot switches are pressed to INCR, the actuator is driven in the retract direction and rpm will increase. Pressing to the DECR position extends the actuator and decreases the rpm slightly.

96.10.9 Operational Check – Governor Rpm Actuator System

96.10.9.1 Apply electrical power to helicopter electrical system

96.10.9.2 Set RPM INCR/DECR switch on pilot collective stick to INCR. Verify governor rpm actuator retracts.

96.10.9.3 Set RPM INCR/DECR switch on pilot collective stick to DECR. Verify governor rpm actuator extends.

96.10.9.4 Set RPM INCR/DECR switch on copilot collective stick to INCR. Verify governor rpm actuator retracts.

96.10.9.5 Set RPM INCR/DECR switch on copilot collective stick to DECR. Verify governor rpm actuator extends.

96.10.9.6 Turn electrical power off.

96.10.10 Sump Drain Valves

Sump drain valves are supplied power from the 28 VDC essential bus through FUEL VALVE circuit breaker. When the FUEL VALVE switch is set to OFF, and the SUMP DRAIN switch is depressed, the respective sump drain valve opens.

96.10.11 Operational Check – Fuel Sump Drain Valves

96.10.11.1 Apply electrical power to helicopter electrical system.

96.10.11.2 Set FUEL VALVE switch to OFF.

• COPYRIGHT © 2023 BY EAGLE COPTERS MAINTENANCE LTD •
THIS DOCUMENT IS PRIVATE AND CONFIDENTIAL AND IS SUPPLIED ON THE EXPRESS CONDITION THAT IT IS NOT TO BE USED FOR ANY PURPOSE OR COPIED OR COMMUNICATED TO ANY OTHER PERSON WITHOUT WRITTEN PERMISSION FROM EAGLE COPTERS MAINTENANCE LTD.

96.10.11.3 Press L/H SUMP DRAIN switch. Verify sump drain valve on L/H fuel cell opens.

96.10.11.4 Release L/H SUMP DRAIN switch. Verify sump drain valve on L/H fuel cell closes.

96.10.11.5 Press R/H SUMP DRAIN switch. Verify sump drain valve on R/H fuel cell opens.

96.10.11.6 Release R/H SUMP DRAIN switch. Verify sump drain valve on R/H fuel cell closes.

96.10.11.7 Set FUEL switch to ON.

96.10.11.8 Press L/H SUMP DRAIN switch. Verify sump drain valve on L/H fuel cell does not open.

96.10.11.9 Press R/H SUMP DRAIN switch. Verify sump drain valve on R/H fuel cell does not open.

96.10.11.10 Set FUEL switch to OFF. Turn electrical power off.

96.10.12 Idle Stop Release Solenoid

The idle stop release solenoid limits minimum throttle setting for engine to flight idle during normal or ground run operations. The solenoid receives power from the 28 VDC Essential bus through the IDLE STOP circuit breaker. When the pilot's IDLE STOP REL button is pressed, the idle stop solenoid retracts its stop. This allows the throttle to be actuated further toward OFF position, thus slowing or stopping the engine.

96.10.13 Operational Check – Idle Stop Release Solenoid

96.10.13.1 Apply electrical power to helicopter electrical system.

96.10.13.2 On helicopter perform electrical check as follows:

96.10.13.2.1 Press IDLE STOP RELEASE switch on pilot collective stick. Verify engine idle stop solenoid retracts.

96.10.13.2.2 Release IDLE STOP RELEASE switch on pilot collective stick. Verify engine idle stop solenoid extends.

96.10.13.2.3 Press IDLE STOP RELEASE switch on copilot collective stick. Verify engine idle stop solenoid retracts.

96.10.13.2.4 Release IDLE STOP RELEASE switch on copilot collective stick. Verify engine idle stop solenoid extends.

96.10.13.3 Turn electrical power off.

96.10.14 Engine Anti-Icing

The engine anti-icing system consists of the following components: a hot air solenoid valve located on the engine inlet housing, an ice detector probe located in the engine intake air stream, an ice interpreter mounted in the nose compartment, a de-ice switch mounted on the engine control panels and three annunciators on the master caution panel.

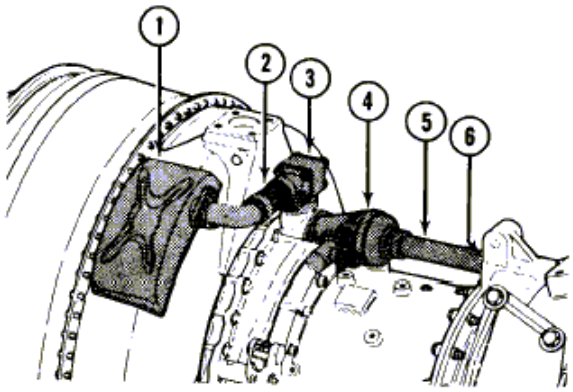

1. Bleed Air Manifold
2. Tube
3. Bleed Air Adapter
4. Hot Air Solenoid Valve
5. Anti-Icing Air Regulator Tube
6. Inlet Housing Port

Figure 96-8. Anti-icing System Components

• COPYRIGHT © 2023 BY EAGLE COPTERS MAINTENANCE LTD •
THIS DOCUMENT IS PRIVATE AND CONFIDENTIAL AND IS SUPPLIED ON THE EXPRESS CONDITION THAT IT IS NOT TO BE USED FOR ANY PURPOSE OR COPIED OR COMMUNICATED TO ANY OTHER PERSON WITHOUT WRITTEN PERMISSION FROM EAGLE COPTERS MAINTENANCE LTD.

96.10.15 Operational Check – Engine Anti-Icing System

Place helicopter in normal ground run operation at 100% engine speed (N2).

96.10.15.1 Set ENGINE DE-ICE switch to ON. Verify ENGINE DE-ICE ON caution light illuminates and a slight rise in EGT (or MGT) is noted.

96.10.15.2 Set ENGINE DE-ICE switch to OFF. Verify ENGINE DE-ICE ON caution light extinguishes and a slight decrease in EGT (or MGT) is noted.

96.10.15.3 Open ENG ANTI-ICE circuit breaker. Verify ENGINE DE-ICE ON caution light illuminates and a slight rise in EGT (or MGT) is noted.

96.10.15.4 Close ENG ANTI-ICE circuit breaker. Verify ENGINE DE-ICE ON caution light extinguishes and a slight decrease in EGT (or MGT) is noted.

96.10.16 Start Fuel Valve

The start fuel valve is used to add additional fuel to the engine for starting purposes. When the FUEL VALVE is selected ON and prior to the START switch being pressed, the START FUEL switch is placed to ON. It then will be manually selected OFF around 25% engine rpm.

96.10.17 Operational Check – Start Fuel Solenoid Valve

96.10.17.1 Disconnect connector (P89S) at start fuel solenoid.

96.10.17.2 Apply electrical power to helicopter electrical system.

96.10.17.3 Open ENGINE IGNITION SYSTEM circuit breaker. Set ENGINE FUEL VALVE and both BOOST PUMP switches to OFF.

96.10.17.4 Momentarily move ENGINE START switch on pilot collective stick to START position. Verify there is voltage at pin A of connector (P89S). (***NOTE:*** *the starter will be engaged. Do not exceed starter duty cycle limits).*

96.10.17.5 Momentarily pull ENGINE START trigger on copilot collective stick to ON. Verify there is voltage at pin A of connector (P89S). (NOTE the starter will be engaged. Do not exceed starter duty cycle limits).

96.10.17.6 Set START FUEL switch to OFF

96.10.17.7 Momentarily move ENGINE START switch on pilot collective stick to START position. Verify there is NO voltage at pin A of connector (P89S). (***NOTE:*** *The starter will be engaged. Do not exceed starter duty cycle limits).*

96.10.17.8 Momentarily pull ENGINE START trigger on copilot collective stick to ON. Verify there is NO voltage at pin A of connector (P89S). *(**NOTE:** The starter will be engaged. Do not exceed starter duty cycle limits).*

96.10.17.9 Turn electrical power off.

96.10.17.10 Close ENGINE IGNITION SYSTEM circuit breaker.

96.10.17.11 Reconnect connector (P89S) at start fuel solenoid.

96.11 FLIGHT CONTROL SYSTEMS

96.11.1 Flight Control System

The flight control system includes force trim and hydraulic bypass solenoid system.

96.11.2 Force Trim

Magnetic brakes are wired in parallel to the 28 VDC Essential bus through control switches and the FORCE TRIM circuit breaker. Control switching is accomplished through a series wired FORCE TRIM ON/OFF switch located on the MISC control panel, and normally closed pilot and

• COPYRIGHT © 2023 BY EAGLE COPTERS MAINTENANCE LTD •
THIS DOCUMENT IS PRIVATE AND CONFIDENTIAL AND IS SUPPLIED ON THE EXPRESS CONDITION THAT IT IS NOT TO BE USED FOR ANY PURPOSE OR COPIED OR COMMUNICATED TO ANY OTHER PERSON WITHOUT WRITTEN PERMISSION FROM EAGLE COPTERS MAINTENANCE LTD.

copilot push button cyclic stick FORCE TRIM switches. Force trim system provides spring forces to maintain control system linkage position and thus relieve pilot or copilot from the strain of holding a particular stick and/or pedal position. FORCE TRIM switches are utilized as necessary to disengage magnetic brakes, allowing spring holding forces to be adjusted to any desired stick or pedal position. Force trim system is de-energized when the FORCE TRIM switch is placed to OFF.

96.11.3 Operational Check – Force Trim

NOTE

If copilot stick is not installed, 204-075-405-015 Cable assembly must be installed on connector (J47) or the dual control switch should be in the 'OUT' position.

96.11.3.1 Apply electrical power to helicopter electrical system.

96.11.3.2 Set FORCE TRIM switch on miscellaneous control panel to ON. Verify cyclic stick has a holding force in fore and aft, and lateral directions and a holding force is present on tail rotor control pedals.

96.11.3.3 Press and hold FORCE TRIM switch on pilot cyclic switch. Verify holding forces, which were present in step 96.11.3.2, are no longer present.

96.11.3.4 Release FORCE TRIM switch on pilot cyclic switch. Verify holding forces are present.

96.11.3.5 Press and hold FORCE TRIM switch on copilot cyclic switch (if copilot cyclic stick is installed). Verify holding forces, which were present in step 96.11.3.2, are no longer present.

96.11.3.6 Release FORCE TRIM switch on copilot cyclic switch. Verify holding forces are present.

96.11.3.7 Turn electrical power off.

96.11.4 Hydraulic Bypass

Hydraulic bypass receives electrical power from the 28 VDC Essential bus through the # 1 and the # 2 HYDR SYS circuit breakers. Hydraulic bypass solenoid valves are controlled by HYDR SYS No.1 and HYDR SYS No.2 switches. The valves are normally de-energized (open) when the switches are in the ON position and energized (closed) when the switches are placed to OFF.

96.11.5 Operational Check – Hydraulic Bypass

96.11.5.1 Apply electrical power to helicopter electrical system.

96.11.5.2 On helicopter perform operational check as follows:

96.11.5.2.1 Set HYDR SYS No.1 switch and HYDR SYS No.2 switch to ON. Verify #1 HYDR SYST & #2 HYDR SYST caution panel lights are illuminated and No.1 and No.2 hydraulic temperature indicators indicate ambient temperature.

96.11.5.2.2 Apply external hydraulic pressure to helicopter hydraulic system. Verify #1 HYDR SYST & #2 HYDR SYST caution panel lights are extinguished and hydraulic filter clog indicator continues to display a green indication. Verify No.1 and No.2 hydraulic pressure indicators read upscale.

NOTE

Maintain proper hydraulic pressure during these tests. Failure to do so may result in unsatisfactory test results.

96.11.5.2.3 Operate cyclic stick, collective stick, and pedal controls. Verify only normal force is required to operate controls.

96.11.5.2.4 Set HYDR SYS No.1 switch to OFF. Verify #1 HYDR SYST caution light illuminates.

96.11.5.2.5 Set HYDR SYS No.1 switch to ON. Verify #1 HYDR SYST caution light extinguishes.

• COPYRIGHT © 2023 BY EAGLE COPTERS MAINTENANCE LTD •
THIS DOCUMENT IS PRIVATE AND CONFIDENTIAL AND IS SUPPLIED ON THE EXPRESS CONDITION THAT IT IS NOT TO BE USED FOR ANY PURPOSE OR COPIED OR COMMUNICATED TO ANY OTHER PERSON WITHOUT WRITTEN PERMISSION FROM EAGLE COPTERS MAINTENANCE LTD.

96.11.5.2.6 Set HYDR SYS No.2 switch to OFF. Verify #2 HYDR SYST caution light illuminates.

96.11.5.2.7 Set HYDR SYS No.2 switch to ON. Verify #2 HYDR SYST caution light extinguishes.

96.11.5.2.8 Disconnect connector (P106) from hydraulic No.1 temperature switch (S204) and temporarily place a jumper between pins B and C. Verify #1 HYDR SYST caution light illuminates. Remove jumper.

96.11.5.2.9 Disconnect connector (P105) from hydraulic No.2 temperature switch (S205) and temporarily place a jumper between pins B and C. Verify #1 HYDR SYST caution light illuminates. Remove jumper.

96.11.5.2.10 Connect connectors (P105 and P106) to hydraulic switches. Verify #1 HYDR SYST & #2 HYDR SYST caution lights are extinguished.

96.11.5.3 Turn off electrical power.

96.12 HEATING SYSTEMS

96.12.1 Heating Systems

The heating system (electrical portion) includes pitot tube heaters, static port heaters (if installed), cabin heater, cabin temperature control and vent blower systems.

96.12.2 Pitot Tube Heaters

Pitot tube heaters prevent the pitot tube from icing over. Heating elements utilize 28 VDC and are energized manually with PITOT HTR switch on the overhead console.

96.12.3 Operational Check – Pitot Tube Heaters

CAUTION

USE EXTREME CARE WHEN CHECKING PITOT TUBE HEATER ELEMENT WHILE IN OPERATION

96.12.3.1 Apply electrical power to helicopter electrical system.

96.12.3.2 Open PITOT HTR CPLT circuit breaker.

96.12.3.3 Set PITOT HTR switch on pilot overhead console to ON. Verify pilot pitot tube heater is energized and beginning to heat.

96.12.3.4 Set PITOT HTR switch on pilot overhead console to OFF. Verify pilot pitot tube heater is de-energized and cooling.

96.12.3.5 Close PITOT HTR CPLT circuit breaker. Open PITOT HTR PILOT circuit breaker.

96.12.3.6 Set PITOT HTR switch on pilot overhead console to ON. Verify copilot pitot tube heater is energized and beginning to heat.

96.12.3.7 Set PITOT HTR switch on pilot overhead console to OFF. Verify copilot pitot tube heater is de-energized and cooling.

96.12.3.8 Turn electrical power off. Close PITOT HTR PILOT circuit breaker.

96.12.4 Cabin Heater

The bleed air cabin heater mixes bleed air with ambient air, and distributes mixed air into the cabin area. The system has two electrical control circuits, outlet air control and temperature control. Both circuits utilize 28 VDC power through the CABIN HTR circuit breaker. Outlet air circuitry controls the amount of heater air needed for cabin heating and defrosting. This circuit includes the aft outlet valve, aft outlets limit switch, and HEAT AFT

• COPYRIGHT © 2023 BY EAGLE COPTERS MAINTENANCE LTD •
THIS DOCUMENT IS PRIVATE AND CONFIDENTIAL AND IS SUPPLIED ON THE EXPRESS CONDITION THAT IT IS NOT TO BE USED FOR ANY PURPOSE OR COPIED OR COMMUNICATED TO ANY OTHER PERSON WITHOUT WRITTEN PERMISSION FROM EAGLE COPTERS MAINTENANCE LTD.

CHAPTER 96 – ELECTRICAL SYSTEM (96-00-00)

OUTLET switch. Temperature control circuitry combines bleed air with outside air for distribution in the heater system. This circuit includes the heater valve, overheat switch, heater relay and SYSTEM SELECTOR switch. Overheat switch and heater relay are protective devices to prevent excessively hot air from entering the distribution system.

96.12.5 Operational Check – Cabin Heater

96.12.5.1 Apply electrical power to helicopter electrical system.

96.12.5.2 On helicopter perform operational check as follows:

96.12.5.2.1 Open RPM WARNING circuit breaker. Set HEAT AFT OUTLET switch to ON and SYSTEM SELECTOR switch to HEATER. Verify aft outlet valve (if installed) and doorpost valve open and HEATER ON light is illuminated.

96.12.5.2.2 Verify bleed air heater valve opens.

96.12.5.2.3 Move manual defrost lever to full ON position (actuates aft outlet limit switch (S31)). Verify aft outlet valve and doorpost outlet valve return to closed position.

96.12.5.2.4 Move manual defrost lever to full OFF position. Verify aft outlet valve and doorpost outlet valve return to open position.

96.12.5.2.5 Set HEAT AFT OUTLET switch to OFF. Verify aft outlet valve and doorpost outlet valve return to closed position.

96.12.5.2.6 Connect a temporary wire between wires H10B22 on overheat switch (S81) and airframe structure (ground). After a 30 second time delay verify CABIN HTR circuit breaker trips, bleed air heater valve de-energizes and HEATER ON light extinguishes.

96.12.5.2.7 Remove wire installed in step 96.12.5.2.6 and reset CABIN HTR circuit breaker. Verify results described in step 96.12.5.2.2 are obtained.

NOTE
S/Ns 30817, 30687, and 30599 are fitted with an ENG FIRE "T" handle. All S/Ns except 30817, 30687, and 30599 are fitted with ENG FIRE and FIRE EXTING switch-lights.

CAUTION

AVOID MOVEMENT OF FIRE EXT SWITCH WHEN FIRE HANDLE IS PULLED. MOVEMENT OF SWITCH WILL RELEASE EXTINGUISHING AGENT INTO THE ENGINE COMPARTMENT.

CAUTION

AVOID DEPRESSING THE FIRE EXTING SWITCH-LIGHT WHENEVER IT IS ILLUMINATED. DEPRESSING THE SWITCH-LIGHT WILL RELEASE EXTINGUISHING AGENT INTO THE ENGINE COMPARTMENT.

96.12.5.2.8 Pull out FIRE 1 PULL handle or lift the cover and press either ENG FIRE switch-light (FIRE EXTING will illuminate). Verify heater valve de-energizes and HEATER ON light extinguishes.

96.12.5.2.9 Push in FIRE 1 PULL handle or press the ENG FIRE switch-light again (FIRE EXTING switch-light will extinguish). Verify heater valve energizes and HEATER ON light illuminates.

96.12.5.2.10 Pull up on either collective. Verify heater valve de-energizes and HEATER ON light extinguishes and HEATER OFF light illuminates.

96.12.5.2.11 Return collective to down position. Verify heater valve energizes and HEATER OFF light extinguishes and HEATER ON light illuminates.

96.12.5.2.12 Close RPM WARNING circuit breaker. Verify heater valve de-energizes.

• COPYRIGHT © 2023 BY EAGLE COPTERS MAINTENANCE LTD •
THIS DOCUMENT IS PRIVATE AND CONFIDENTIAL AND IS SUPPLIED ON THE EXPRESS CONDITION THAT IT IS NOT TO BE USED FOR ANY PURPOSE OR COPIED OR COMMUNICATED TO ANY OTHER PERSON WITHOUT WRITTEN PERMISSION FROM EAGLE COPTERS MAINTENANCE LTD.

CHAPTER 96 – ELECTRICAL SYSTEM (96-00-00)

96.12.5.2.13 Return HEAT AFT OUTLET switch and SYSTEM SELECTOR switch to OFF.

96.12.5.3 Turn electrical power off.

96.12.6 Cabin Temperature Control

Cabin temperature control consists of a DC positioning motor and associated servocontroller that provides a convenient means of controlling duct air temperature in distribution.

96.12.7 Rigging – Cabin Temperature Control

NOTE

With electrical power on, air temperature control (2, Figure 96-9) is phased with motor as follows:

96.12.7.1 Disconnect electrical connect from motor.

96.12.7.2 Remove flex shaft between air temperature control and motor.

96.12.7.3 Remove bracket screws and remove motor from bracket.

96.12.7.4 Set servocontroller knob to full COLD.

96.12.7.5 Attach electrical harness to servocontroller.

96.12.7.6 Rotate air temperature control tang counterclockwise to stop position.

96.12.7.7 Mount motor in bracket but do not tighten bracket screws.

96.12.7.8 Attach electrical connector to motor.

96.12.7.9 Attach flex shaft between air temperature control and motor.

96.12.7.10 Tighten motor mounting screws.

96.12.8 Operational Check – Cabin Temperature Control

96.12.8.1 Apply electrical power to helicopter electrical system.

96.12.8.2 Open RPM WARNING circuit breaker.

96.12.8.3 Set SYSTEM SELECTOR switch to HEATER. Bleed air valve will actuate.

96.12.8.4 Rotate hand control on CABIN TEMP controller (R/H doorpost) throughout its range, from cold to hot position. Motor travel shall correspond with control position within ± 3%.

NOTE

Direction of motor travel shall be the same as direction of the hand controller when viewed from end of motor opposite the shaft. Motor shall develop a minimum of 5 inch-pounds torque throughout total travel. Time required to travel through 270° of arc shall not exceed 45 seconds. Full load current should not exceed 1.0 ampere with 28 VDC input voltage applied.

96.12.8.5 Close RPM WARNING circuit breaker.

96.12.8.6 Turn electrical power off.

• COPYRIGHT © 2023 BY EAGLE COPTERS MAINTENANCE LTD •
THIS DOCUMENT IS PRIVATE AND CONFIDENTIAL AND IS SUPPLIED ON THE EXPRESS CONDITION THAT IT IS NOT TO BE USED FOR ANY PURPOSE OR COPIED OR COMMUNICATED TO ANY OTHER PERSON WITHOUT WRITTEN PERMISSION FROM EAGLE COPTERS MAINTENANCE LTD.

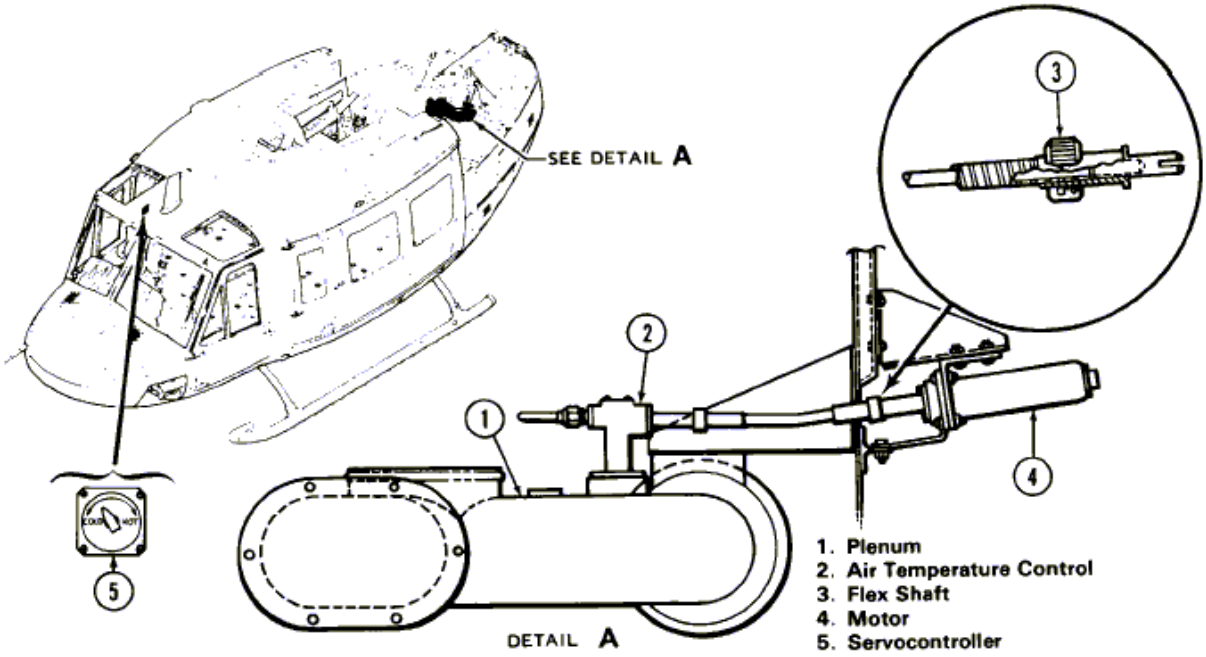

Figure 96-9. Cabin Temperature Control

96.12.9 Bleed Air Priority Switch

The bleed air priority switch is located adjacent to the copilot's collective lever jackshaft. It serves to stop bleed air flow from the engine to the heater system when maximum engine power may be required for flight. The switch is activated when the collective is raised approximately 12.5 to 13.5 degrees from the full down position. When the switch is activated, an overheat condition is simulated electrically and bleed air is shut off at the heater valve. When the collective pitch lever is lowered, normal bleed air heating is resumed.

96.12.10 Rigging – Bleed Air Priority Switch

NOTE

The collective pitch control system must be fully rigged prior to rigging the bleed air priority switch.

Rig the bleed air priority switch as follows:

96.12.10.1 Ensure the collective pitch lever is fully down.

96.12.10.2 Loosen bolts on cam and rotate cam on jackshaft until index arrow on cam aligns with center of roller actuator on switch.

96.12.10.3 Adjust switch to obtain 0.010 to 0.025 inch clearance between the cam and the switch roller actuator (Figure 96-10).

96.12.10.4 Raise the collective pitch lever until switch actuates.

96.12.10.5 Verify that the collective pitch lever is between 12.5 and 13.5 degrees from the full down position.

• COPYRIGHT © 2023 BY EAGLE COPTERS MAINTENANCE LTD •
THIS DOCUMENT IS PRIVATE AND CONFIDENTIAL AND IS SUPPLIED ON THE EXPRESS CONDITION THAT IT IS NOT TO BE USED FOR ANY PURPOSE OR COPIED OR COMMUNICATED TO ANY OTHER PERSON WITHOUT WRITTEN PERMISSION FROM EAGLE COPTERS MAINTENANCE LTD.

96.12.10.6 If switch does not actuate, repeat steps 96.12.10.1 thru 96.12.10.5 until correct readings are obtained.

96.12.11 Operational Check – Bleed Air Priority Switch

96.12.11.1 Apply electrical power to helicopter electrical system.

96.12.11.2 Set the NON-ESS BUS switch to MANUAL.

96.12.11.3 Place SYSTEM SELECTOR SWITCH to heater. Verify HEATER and ON light are illuminated.

96.12.11.4 Raise collective pitch lever to approximately half way up. Verify ON light extinguishes and OFF light illuminates.

96.12.11.5 Lower collective pitch lever to full down and verify that OFF light extinguishes and ON light illuminates.

96.12.11.6 Set SYSTEM SELECTOR SWITCH to OFF and verify both the HEATER and the ON light extinguish.

96.12.11.7 Turn electrical power off.

96.12.12 Vent Blower

A right and left vent blower is provided. Electrical circuit includes two 28 VDC blower motors, a control switch, and VENT BLOWER circuit breaker. Both blowers are energized with HEAT VENT BLWR switch on the overhead console.

96.12.13 Operational Check – Vent Blower

96.12.13.1 Apply electrical power to helicopter electrical system.

96.12.13.2 Set the NON ESS BUS switch to MANUAL.

96.12.13.3 Set HEAT VENT BLWR switch to ON. Verify left and right vent blowers operate.

96.12.13.4 Set HEAT VENT BLWR switch to OFF. Verify left and right vent blowers cease to operate.

96.12.13.5 Turn electrical power off.

• COPYRIGHT © 2023 BY EAGLE COPTERS MAINTENANCE LTD •
THIS DOCUMENT IS PRIVATE AND CONFIDENTIAL AND IS SUPPLIED ON THE EXPRESS CONDITION THAT IT IS NOT TO BE USED FOR ANY PURPOSE OR COPIED OR COMMUNICATED TO ANY OTHER PERSON WITHOUT WRITTEN PERMISSION FROM EAGLE COPTERS MAINTENANCE LTD.

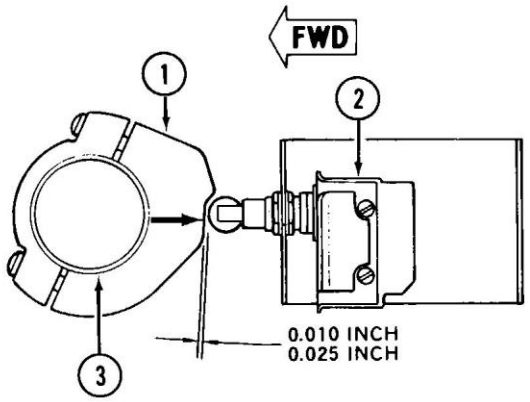

1. Cam
2. Switch
3. Jackshaft

Figure 96-10. Bleed Air Priority Switch

96.13 MISCELLANEOUS ELECTRICAL SYSTEMS

Miscellaneous electrical systems include the windshield wipers, engine fire extinguisher, and the cargo release system.

96.13.1 Windshield Wipers

With the WIPER SEL switch, wipers can be operated individually or simultaneously. With WIPERS speed control switch, wipers can be energized at LOW, MED, and HIGH speeds, de-energized in the OFF position, and PARK. PARK position is spring loaded (returns to OFF) for stowing wiper blades to a location where vision is not obstructed.

96.13.2 Operational Check – Windshield Wiper

CAUTION

WINDSHIELDS SHALL BE PROTECTED AGAINST SCRATCHING BY WIPER BLADES

NOTE

Wiper blades may be held up off windshields by lifting blade and inserting a suitable pin into the hole at the base of the wiper arm.

96.13.3.1 Apply electrical power to helicopter electrical system.

96.13.3.2 Set WIPER SEL switch to BOTH. Verify pilot and copilot wipers operate in accordance with WIPERS speed control in HIGH, MED, LOW, OFF, and PARK positions (OFF the wipers may stop in any position on the windshield, PARK the wipers shall stop in the park position at the end of the travel closest to the top of the windshield).

96.13.2.3 Set WIPER SEL switch to PILOT. Verify only pilot wiper operates in accordance with WIPERS speed control in HIGH, MED, LOW, OFF, and PARK positions.

96.13.2.4 Set WIPER SEL switch to COPILOT. Verify only copilot wiper operates in accordance with WIPERS speed control in HIGH, MED, LOW, OFF, and PARK positions.

96.13.2.5 Open WINDSHIELD WIPER COPLT circuit breaker. Repeat step 96.13.2.3.

96.13.2.6 Close WINDSHIELD WIPER COPLT circuit breaker and open WINDSHIELD WIPER PILOT circuit breaker. Repeat step 96.13.2.4.

96.13.2.7 Turn electrical power off.

96.13.3 Engine Fire Extinguisher System

NOTE

S/Ns 30817, 30687, and 30599 are fitted with an ENG FIRE "T" handle. All S/Ns except 30817, 30687, and 30599 are fitted with ENG FIRE and FIRE EXTING switch-lights.

• COPYRIGHT © 2023 BY EAGLE COPTERS MAINTENANCE LTD •
THIS DOCUMENT IS PRIVATE AND CONFIDENTIAL AND IS SUPPLIED ON THE EXPRESS CONDITION THAT IT IS NOT TO BE USED FOR ANY PURPOSE OR COPIED OR COMMUNICATED TO ANY OTHER PERSON WITHOUT WRITTEN PERMISSION FROM EAGLE COPTERS MAINTENANCE LTD.

CHAPTER 96 – ELECTRICAL SYSTEM (96-00-00)

The engine fire extinguisher system consists of a fire extinguisher discharge switch, located on the instrument panel above the fire handle or FIRE EXTING switch-lights located on the instrument panel at each crew station, and a fire extinguisher cartridge located on the left side of the service deck aft of the engine.

When a fire occurs in the engine compartment, the fire detector amplifier (Z4) causes the FIRE 1 PULL handle or the ENG FIRE switch-light to illuminate. In the event that fire extinguishing action is required, pulling the FIRE 1 PULL handle or lifting either safetied cover and pressing the ENG FIRE switch-light will arm the squib on the extinguisher bottle and illuminate the FIRE EXTING switch-lights. Actuating the FIRE EXT switch or pressing either illuminated FIRE EXTING switch-light will discharge the extinguisher bottle.

96.13.4 Operational Check – Fire Extinguisher Discharge Circuit

WARNING

SQUIBB CARTRIDGES ARE PYROTECHNIC DEVICES. INADVERTENT DETONATION CAN RESULT IN SERIOUS INJURY

96.13.4.1 Disconnect connector (P193) from the fire extinguisher cartridge.

96.13.4.2 Set BATTERY switch to BATTERY. Set ENGINE FIRE EXT switch, located on upper center of instrument panel, to DISCHARGE or press the pilot's FIRE EXTING switch-light.

96.13.4.3 Check that no voltage is present between pin A and Ground and between pin B and Ground of connector (P193).

96.13.4.4 Release ENGINE FIRE EXT switch or release the FIRE EXTING switch-light.

96.13.4.5 Pull out FIRE 1 PULL handle or lift the safetied cover and press the pilot's ENG FIRE switch-light. Select and hold ENGINE FIRE EXT switch in the DISCHARGE position or press and hold the pilot's FIRE EXTING switch-light. Check that 28 VDC is present between pin A and Ground and between pin B and Ground of connector (P193).

96.13.4.6 Release ENGINE FIRE EXT switch to OFF or release the pilot's FIRE EXTING switch-light (FIRE EXTING switch-light will remain illuminated). Check that no voltage is present between pins A and Ground and between pin B and Ground of connector (P193).

96.13.4.7 If ENG FIRE and FIRE EXTING switch-lights are installed, press pilot's ENG FIRE switch-light and verify FIRE EXTING switch-lights extinguish.

96.13.4.8 If ENG FIRE and FIRE EXTING switch-lights are installed, repeat steps 96.13.4.2 to 96.13.4.7 for copilot's ENG FIRE and FIRE EXTING switch-lights.

96.13.4.9 Push in FIRE 1 PULL handle. Open FIRE EXT circuit breaker. Set BATTERY switch to OFF. Connect connector (P193) to fire extinguisher cartridge.

96.13.4.10 IF ENG FIRE and FIRE EXTING switch-lights are installed, verify that neither FIRE EXTING switch-light is illuminated, open FIRE EXT circuit breaker. Set BATTERY switch to OFF. Reconnect (P193) connector to fire extinguisher cartridge. Install witness wire on the ENG FIRE switch-light covers.

96.13.5 Cargo Release System

The cargo release system is a system on the helicopter that controls the cargo hook when SI-204-3 is installed. The cargo release system consists of a cargo hook release relay, a cargo release switch, cargo release armed lights connection for the cargo hook, and release switches on the pilot and copilot cyclic sticks. When the CARGO RELEASE switch, located on the overhead console, is placed in the ARM position, the CARGO REL ARMED lights on the instrument panel, one at each pilot station,

• COPYRIGHT © 2023 BY EAGLE COPTERS MAINTENANCE LTD •
THIS DOCUMENT IS PRIVATE AND CONFIDENTIAL AND IS SUPPLIED ON THE EXPRESS CONDITION THAT IT IS NOT TO BE USED FOR ANY PURPOSE OR COPIED OR COMMUNICATED TO ANY OTHER PERSON WITHOUT WRITTEN PERMISSION FROM EAGLE COPTERS MAINTENANCE LTD.

illuminate. Power is applied to both the pilot and copilot cargo release switches on the respective cyclic sticks. When the pilot or copilot depresses the cargo release switch, the cargo hook release relay energizes and releases the cargo hook.

• COPYRIGHT © 2023 BY EAGLE COPTERS MAINTENANCE LTD •
THIS DOCUMENT IS PRIVATE AND CONFIDENTIAL AND IS SUPPLIED ON THE EXPRESS CONDITION THAT IT IS NOT TO BE USED FOR ANY PURPOSE OR COPIED OR COMMUNICATED TO ANY OTHER PERSON WITHOUT WRITTEN PERMISSION FROM EAGLE COPTERS MAINTENANCE LTD.

CHAPTER 96
ELECTRICAL SYSTEM
(96-00-00)

Appendix A

Appendix A contains Drawings D212-725-8 and D212-725-8-G2 Wiring Routing

• COPYRIGHT © 2023 BY EAGLE COPTERS MAINTENANCE LTD •
THIS DOCUMENT IS PRIVATE AND CONFIDENTIAL AND IS SUPPLIED ON THE EXPRESS CONDITION THAT IT IS NOT TO BE USED FOR ANY PURPOSE OR COPIED OR COMMUNICATED TO ANY OTHER PERSON WITHOUT WRITTEN PERMISSION FROM EAGLE COPTERS MAINTENANCE LTD.

DESIGN	DRAWN BY	DART AEROSPACE LTD
RD	RD	HAWKESBURY, ONTARIO, CANADA
CHECKED	APPROVED	DRAWING NO. REV. C
RD		D212-725-8 SHEET 1
DATE		TITLE SCALE
07.05.01		WIRING ROUTING DIAGRAMS NTS

WIRING ROUTING REVISIONS LIST

WIRING DIAGRAM NUMBER BHT-212-MM	WIRING ROUTNG D212-725-8	PAGE #	REV	DATE	NOTES
N/A	N/A	1	C	07.05.01	-Wiring routing revisions list page 1
CHAPTER 96	WIRING ROUTING ROOF	1	A	06.12.08	-New issue.
			B	07.01.30	-Moved T5 & rerouted wires after moving T5.
CHAPTER 96	WIRING ROUTING FLOOR	2	A	06.12.08	-New issue.
			B	07.01.30	-Stowed minor routing differences on S/N 30687.
			C	07.05.01	-Added dual controls switch identifier. -Added note regarding Tygon Tubing requirement for fuel cell wiring.
CHAPTER 96	WIRING ROUTING UPPER NOSE AREA	3	A	06.12.08	-New issue.
			B	07.01.30	-Correction of erroneous designators.
			C	07.05.01	-Added drawing for upper nose area lower shelf & PA Amp differences
CHAPTER 96	WIRING ROUTING	4	A	06.12.08	-New issue.
			B	07.01.30	-Additional routing showing minor differences on S/N 30687
CHAPTER 96	WIRING ROUTING FWD HELLHOLE	5	A	06.12.08	-New issue.
			B	07.01.30	-Re-issue
CHAPTER 96	WIRING ROUTING AFT HELLHOLE	6	A	06.12.08	-New issue.
			B	07.01.30	-Re-issue.
CHAPTER 96	WIRING ROUTING TAIL	7	A	06.12.08	-New Issue.
			B	07.01.30	-Re-issue.
CHAPTER 96	WIRING ROUTING TRANSMISSION	8	A	06.12.08	-New Issue.
			B	07.01.30	-Re-issue.

Copyright © 2006 by DART AEROSPACE LTD

THIS DOCUMENT IS PRIVATE AND CONFIDENTIAL AND IS SUPPLIED ON THE EXPRESS CONDITION THAT IT IS NOT TO BE USED FOR ANY PURPOSE OR COPIED OR COMMUNICATED TO ANY OTHER PERSON WITHOUT WRITTEN PERMISSION FROM DART AEROSPACE LTD.

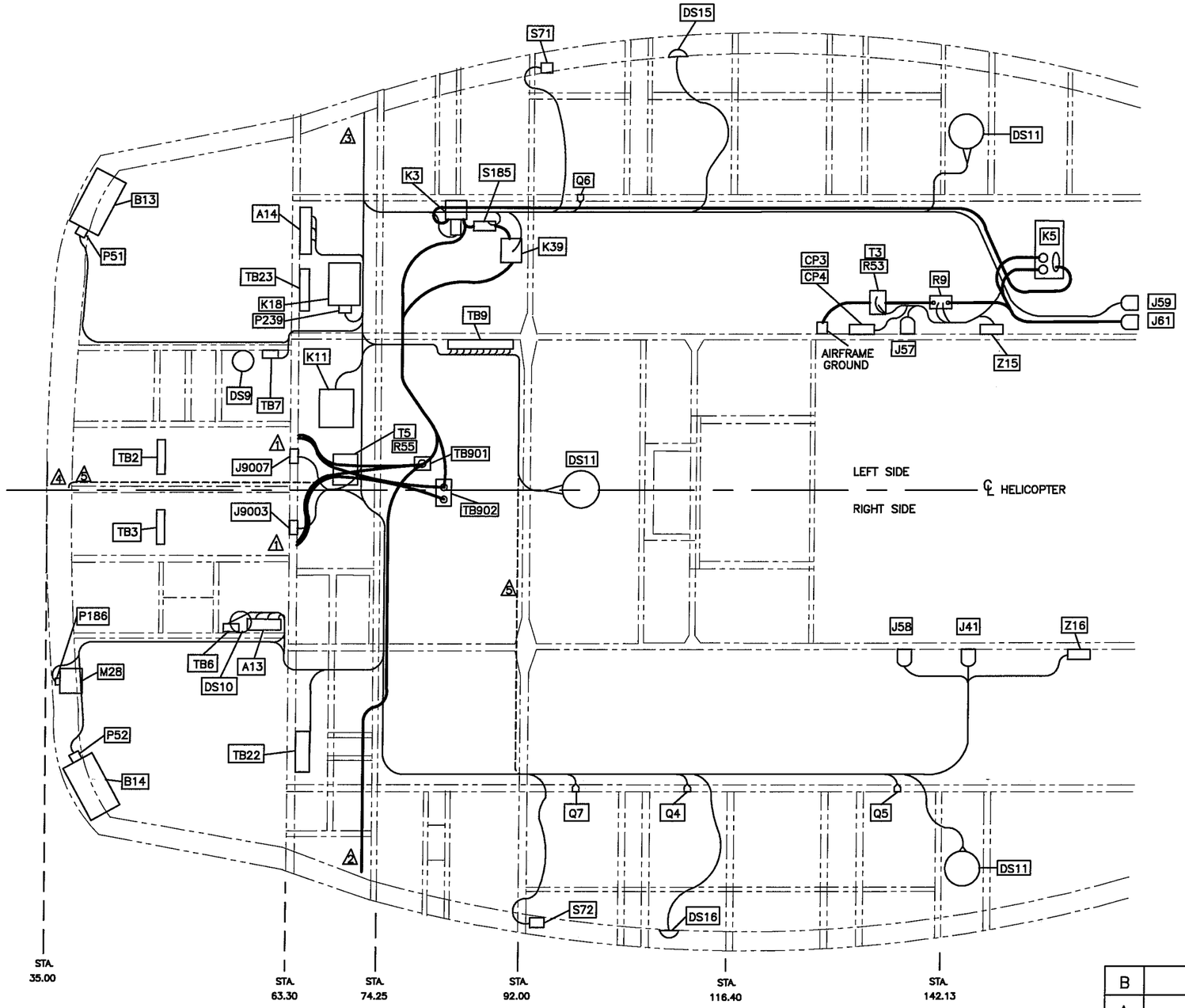

1. CABLES ROUTE INTO CB PANELS.
2. WIRE BUNDLE ROUTES DOWN LH SIDEWALL.
3. CABLE ROUTES DOWN RH SIDEWALL TO LOWER NOSE COMPARTMENT.
4. CABLES ROUTE DOWN CENTER POST
5. S/N 30687 ONLY

WIRING ROUTING – ROOF
VIEW LOOKING UP AT LOWER ROOF STRUCTURE

B	07.01.30	RE-ROUTE T5 R55
A	06.12.08	NEW ISSUE

DESIGN: RD	DRAWN BY: RD	DART AEROSPACE LTD, HAWKESBURY, ONTARIO, CANADA
CHECKED: RD	APPROVED:	DRAWING NO.: D212-725-8 REV. B SHEET 1 OF 8
DATE: 07.01.30		TITLE: WIRING ROUTING – ROOF SCALE: NTS

Copyright 2006 by DART AEROSPACE LTD

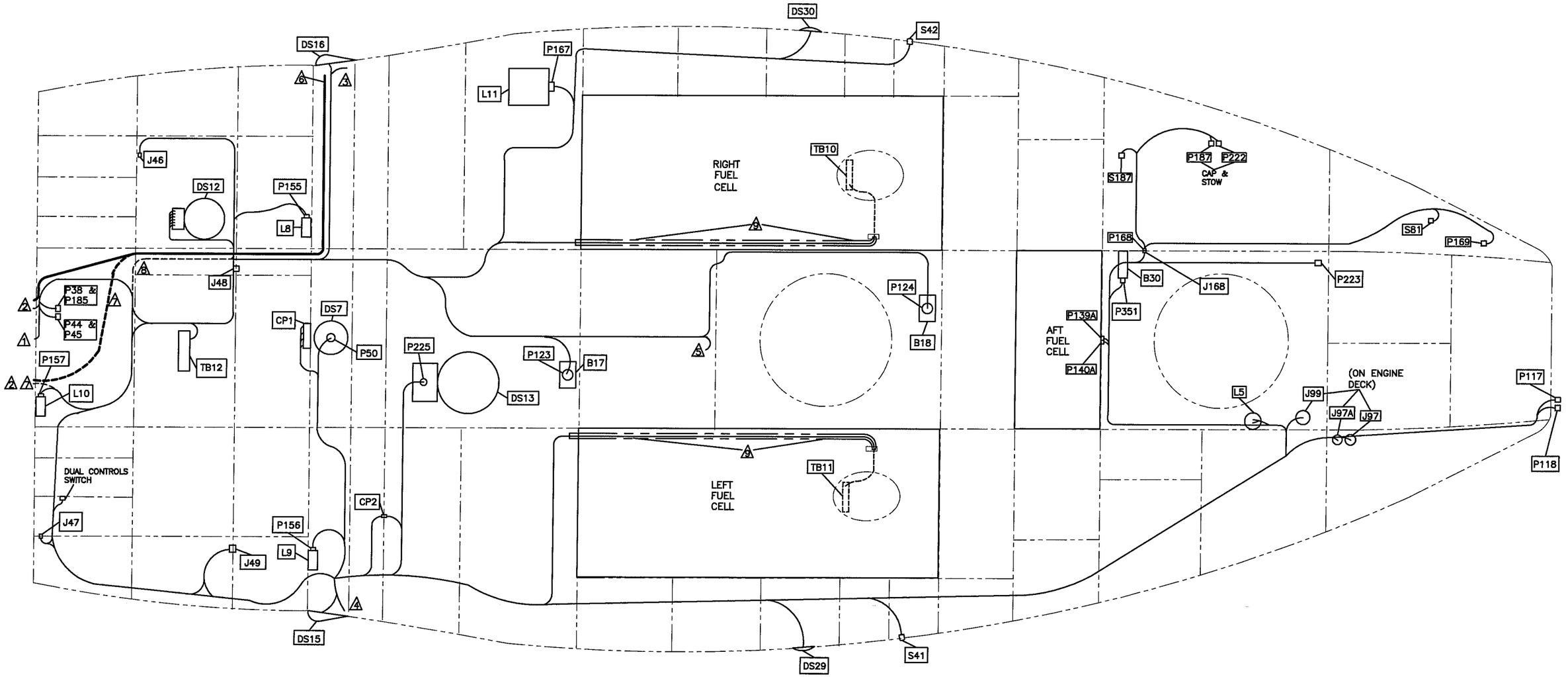

1. WIRE BUNDLE ROUTES UP TO CB PANEL DISCONNECTS.
2. WIRE BUNDLE ROUTES FORWARD TO LOWER NOSE COMPARTMENT.
3. WIRE BUNDLE ROUTES UP RH SIDEWALL TO Z55 & DS26.
4. WIRE BUNDLE ROUTES UP LH SIDEWALL FOR CEILING WIRE RUNS.
5. WIRE BUNDLE IS CAPPED AND STOWED UNLESS LONGLINE/HELITORCH SYSTEM INSTALLED
6. CABLE ROUTES UP RH SIDEWALL TO TB901
7. S/N 30687 ONLY
8. ALL EXCEPT S/N 30687
9. WIRING TO BE ENCLOSED IN TYGON R-3603 TUBING (Or Equivalent) INSIDE LEFT & RIGHT FUEL CELL AREA

WIRING ROUTING – FLOOR

VIEW LOOKING DOWN AT FLOOR STRUCTURE

DESIGN	DRAWN BY	DART AEROSPACE LTD HAWKESBURY, ONTARIO, CANADA	
RD	RD		
CHECKED	APPROVED	DRAWING NO.	REV. C
RD		D212-725-8	SHEET 2 OF 8
DATE		TITLE	SCALE
07.05.01		WIRING ROUTING – FLOOR	NTS

Copyright 2006 by DART AEROSPACE LTD

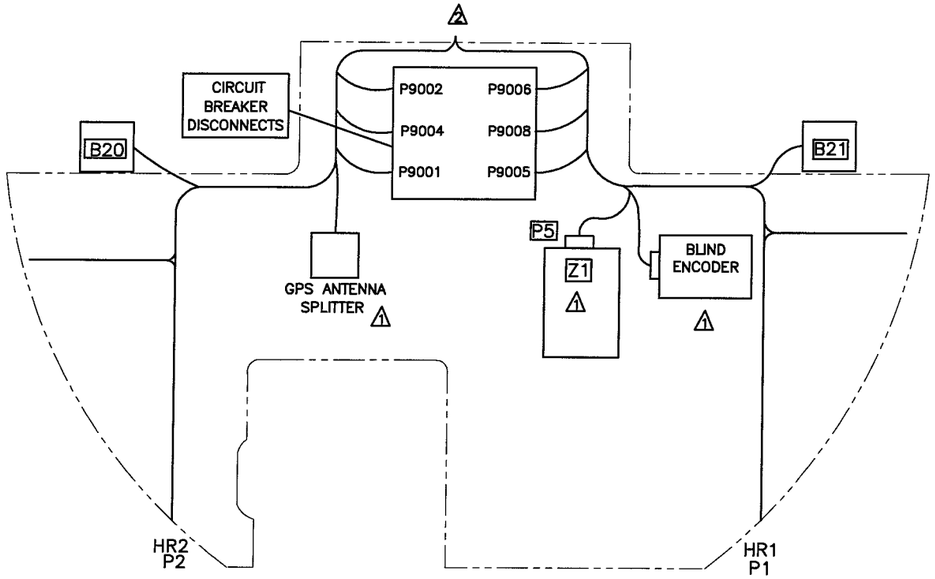

UPPER SHELF – TOP SIDE

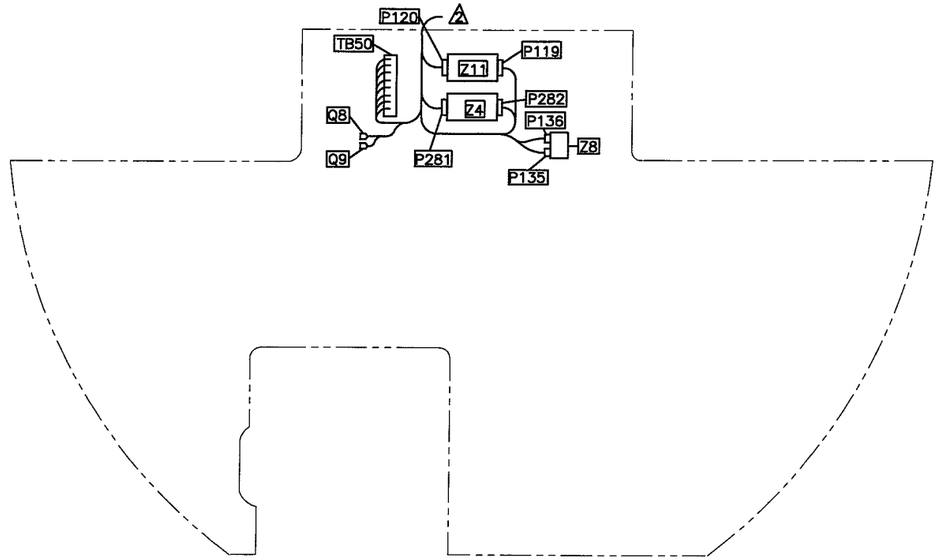

UPPER SHELF – BOTTOM SIDE

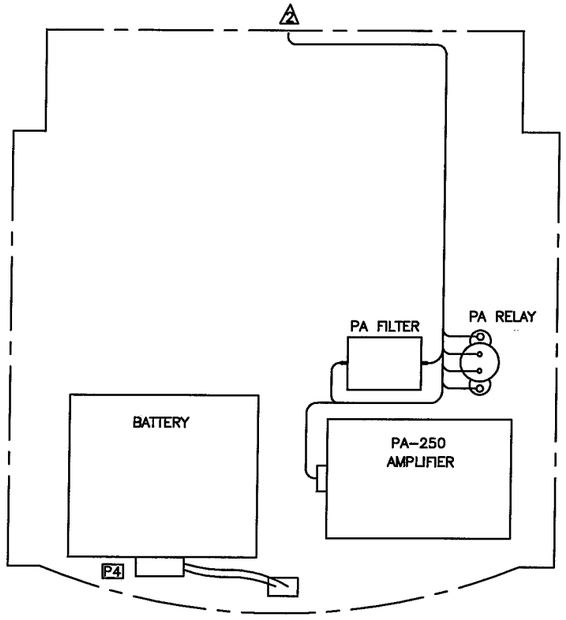

LOWER SHELF – BOTTOM SIDE

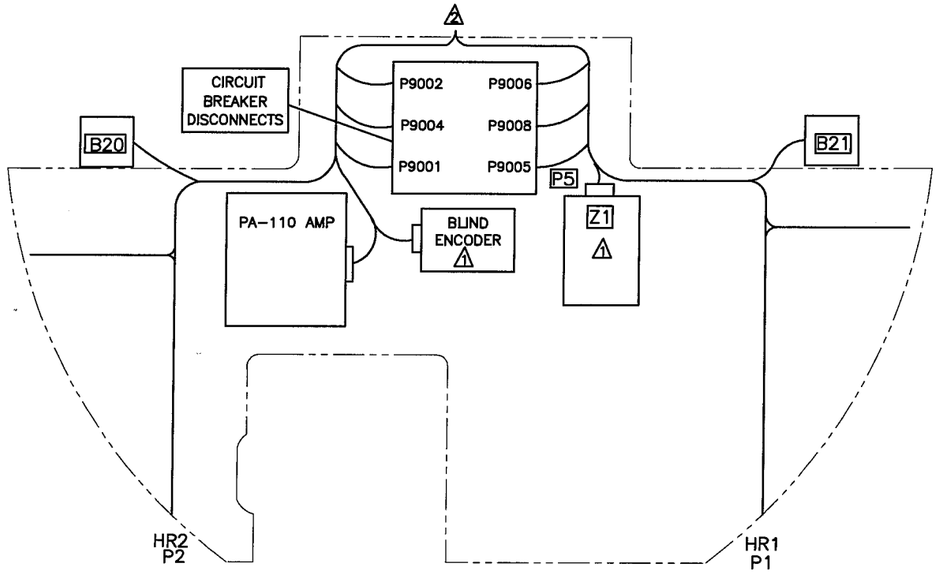

UPPER SHELF – TOP SIDE ⚠3

NOTES:

⚠1 COMPONENT PLACEMENT MAY VARY DUE TO AVIONICS INSTALLATIONS

⚠2 WIRE BUNDLE ROUTES TO MAIN BUNDLE.

⚠3 S/N 30687 ONLY

DESIGN: RD	DRAWN BY: RD	DART AEROSPACE LTD, HAWKESBURY, ONTARIO, CANADA	
CHECKED: RD	APPROVED	DRAWING NO.: D212–725–8	REV. C, SHEET 3 OF 8
DATE: 07.05.01		TITLE: WIRING ROUTING – UPPER NOSE AREA	SCALE: NTS

Copyright 2006 by DART AEROSPACE LTD

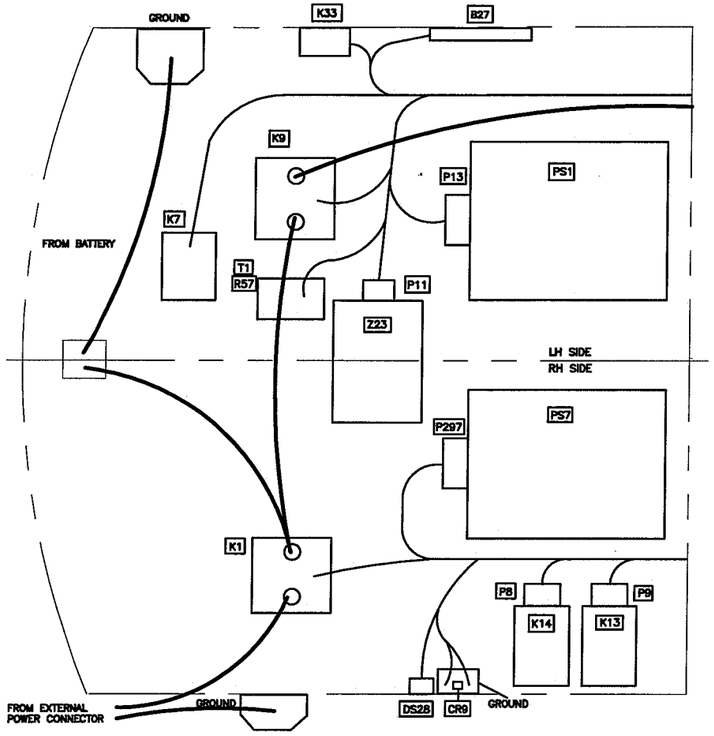

WIRING ROUTING – LOWER NOSE COMPARTMENT
(S/N 30687 ONLY)

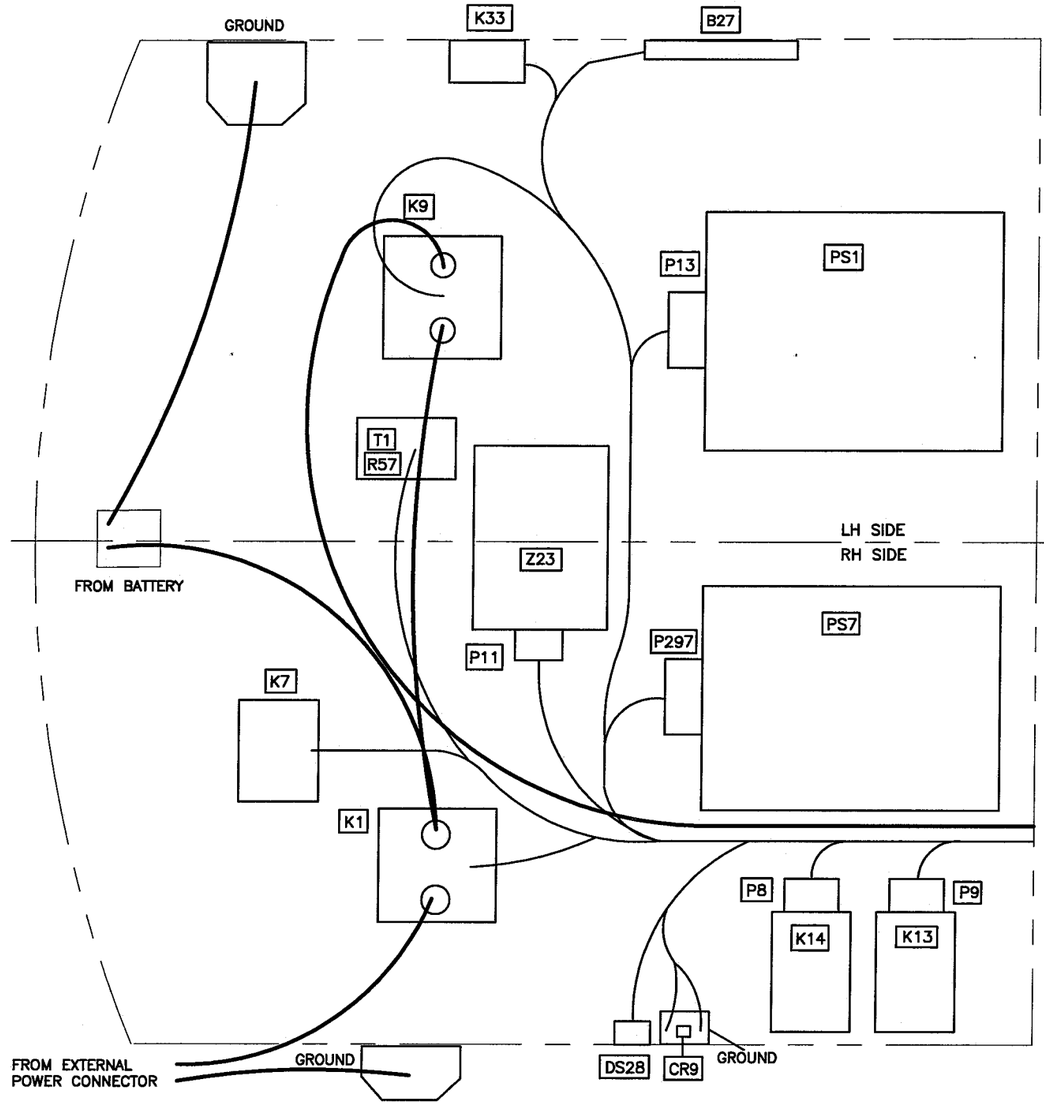

WIRING ROUTING – LOWER NOSE COMPARTMENT

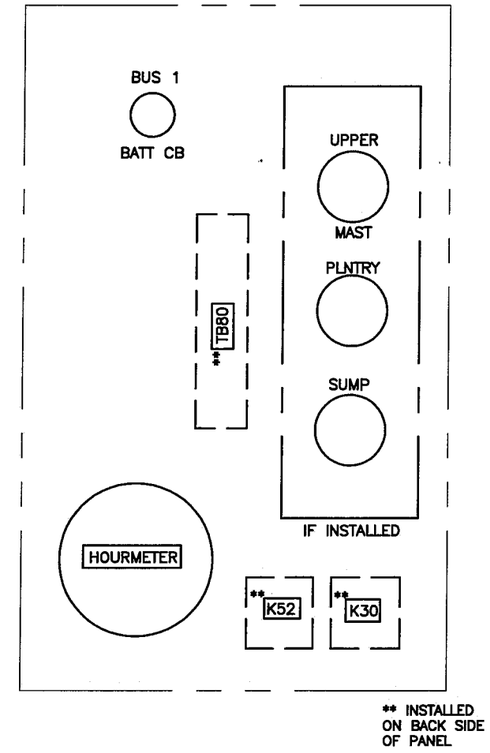

HOURMETER PANEL

DESIGN: RD	DRAWN BY: RD	DART AEROSPACE LTD, HAWKESBURY, ONTARIO, CANADA	
CHECKED: RD	APPROVED	DRAWING NO.: D212-725-8	REV. B, SHEET 4 OF 8
DATE: 07.01.30		TITLE: WIRING ROUTING	SCALE: NTS

Copyright 2006 by DART AEROSPACE LTD

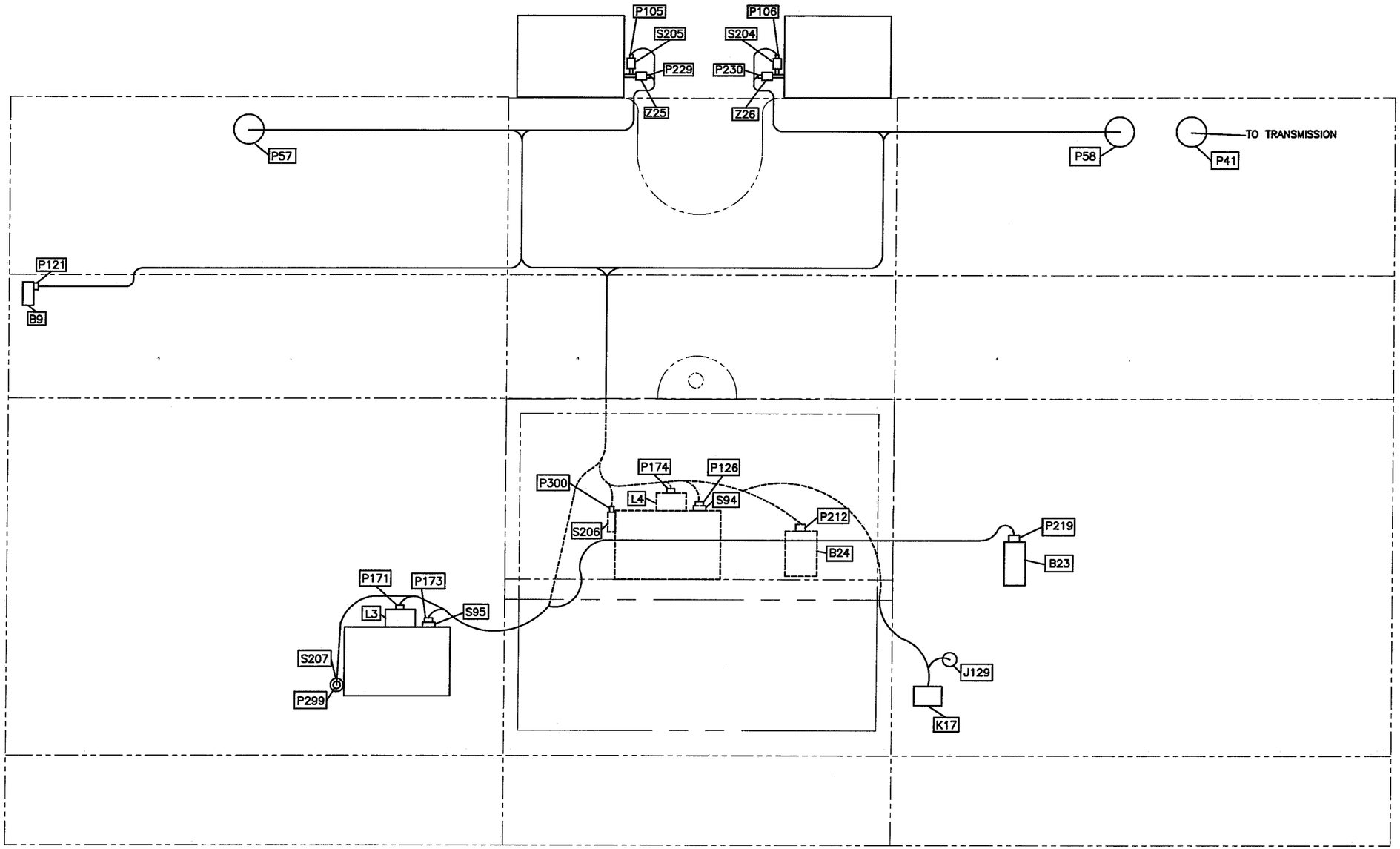

WIRING ROUTING – FWD HELLHOLE

DESIGN: RD	DRAWN BY: RD	DART AEROSPACE LTD, HAWKESBURY, ONTARIO, CANADA	
CHECKED: RD	APPROVED:	DRAWING NO.: D212-725-8	REV. B
DATE: 07.01.30		TITLE: WIRING ROUTING – FWD HELLHOLE	SHEET 5 OF 8, SCALE: NTS

Copyright 2006 by DART AEROSPACE LTD

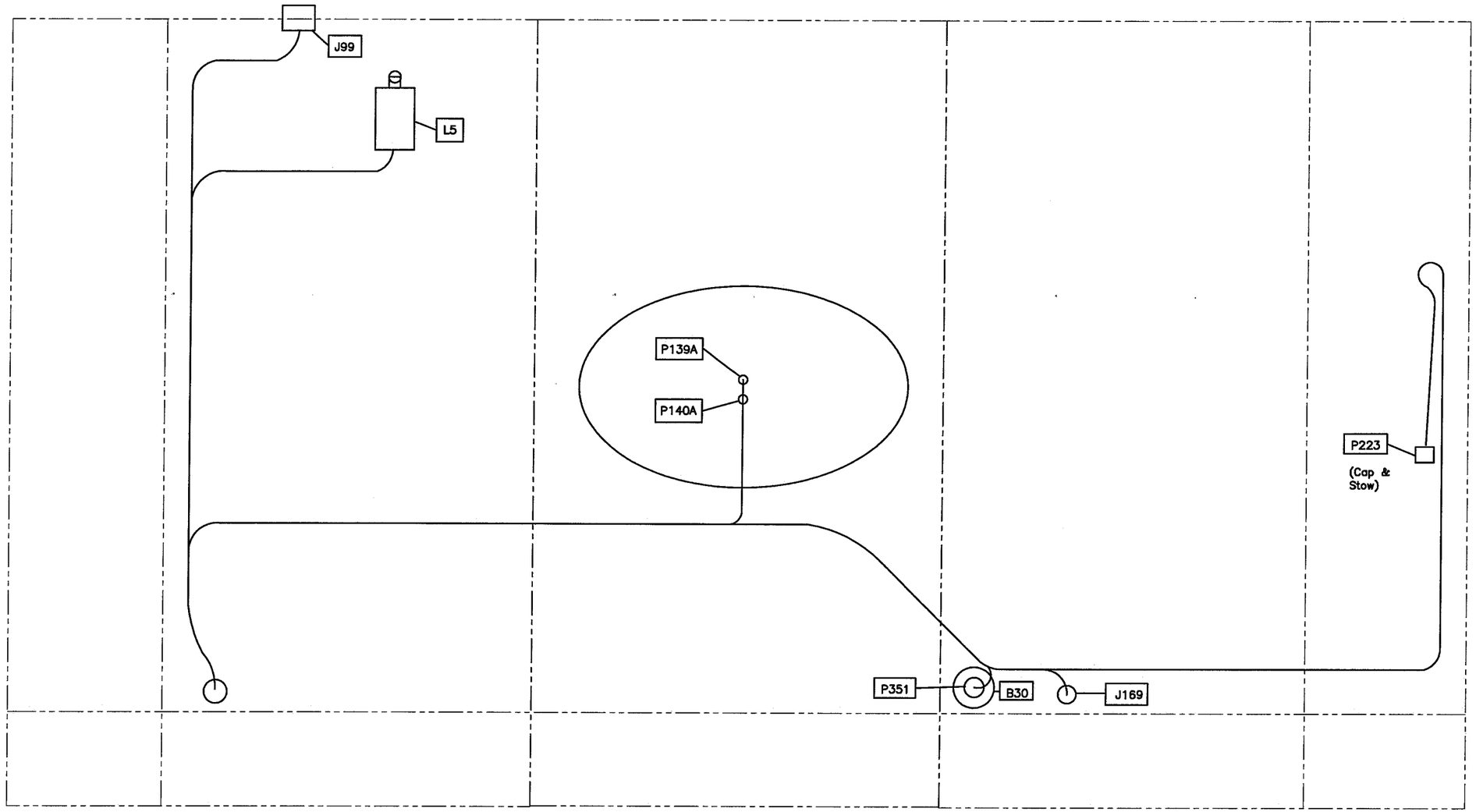

WIRING ROUTING – AFT HELLHOLE

DESIGN: RD	DRAWN BY: RD	DART AEROSPACE LTD, HAWKESBURY, ONTARIO, CANADA	
CHECKED: RD	APPROVED:	DRAWING NO.: D212-725-8	REV. B, SHEET 6 OF 8
DATE: 07.01.30		TITLE: WIRING ROUTING – AFT HELLHOLE	SCALE: NTS

Copyright 2006 by DART AEROSPACE LTD

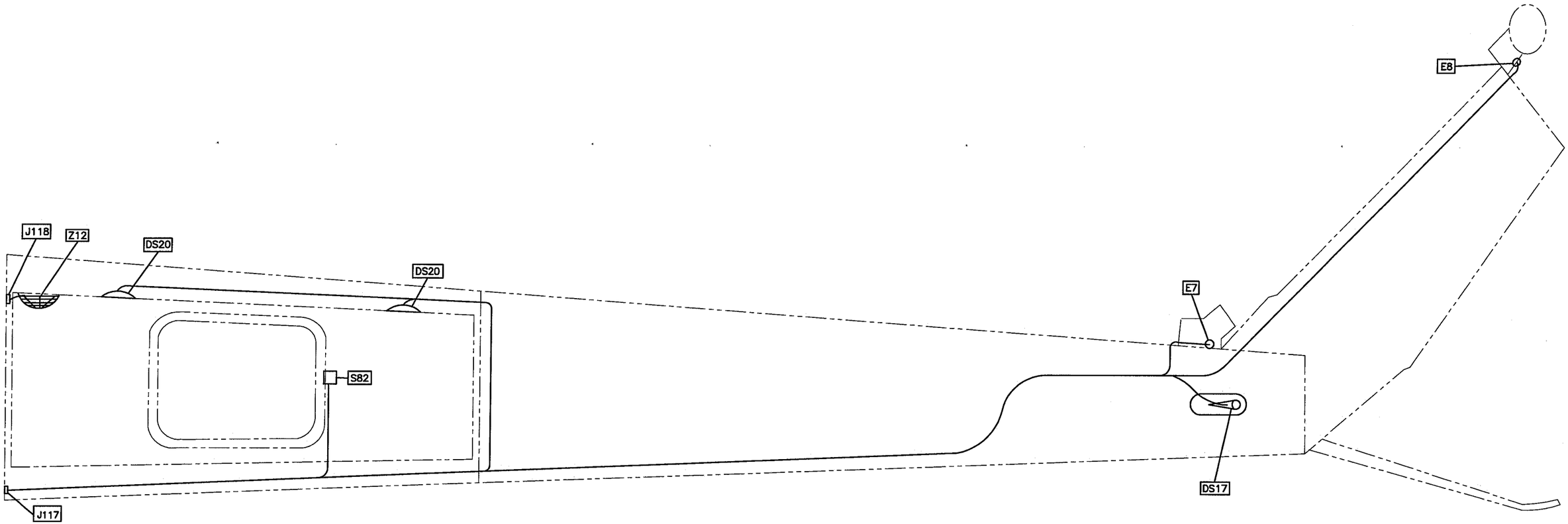

WIRING ROUTING – TAIL

DESIGN	DRAWN BY	DART AEROSPACE LTD HAWKESBURY, ONTARIO, CANADA	
RD	RD		
CHECKED	APPROVED	DRAWING NO.	REV. B
RD		D212-725-8	SHEET 7 OF 8
DATE		TITLE	SCALE
07.01.30		WIRING ROUTING – TAIL	NTS

Copyright 2006 by DART AEROSPACE LTD

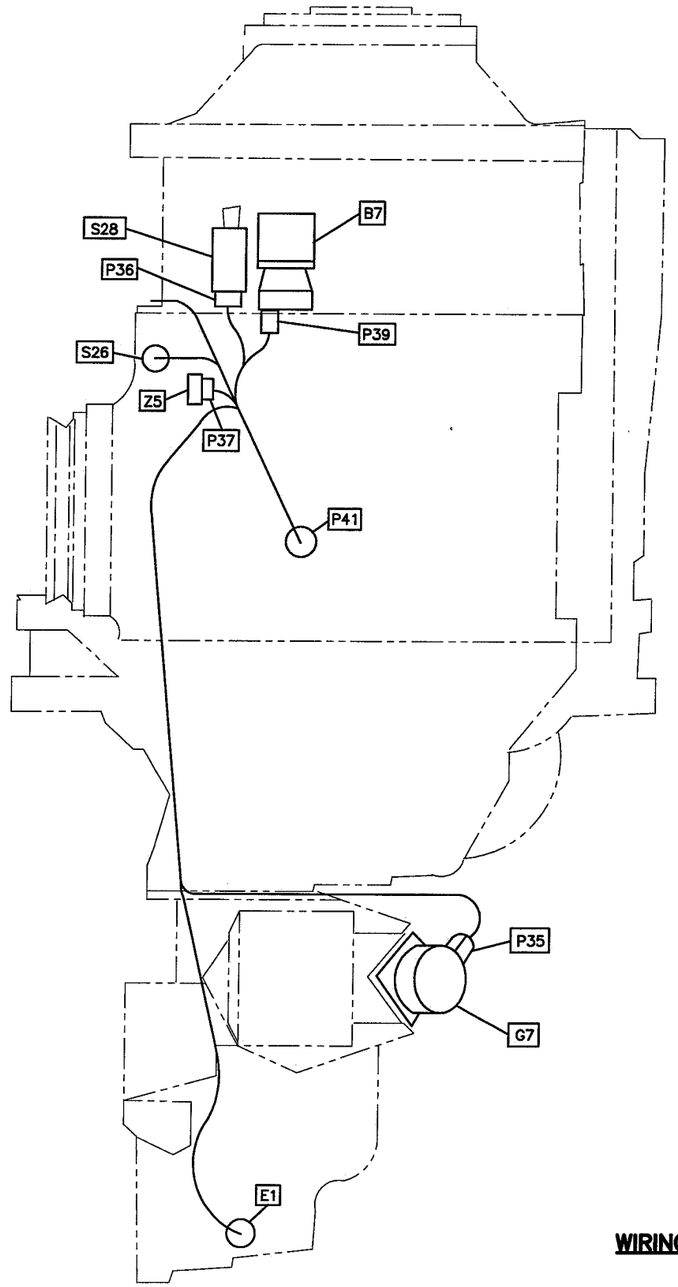

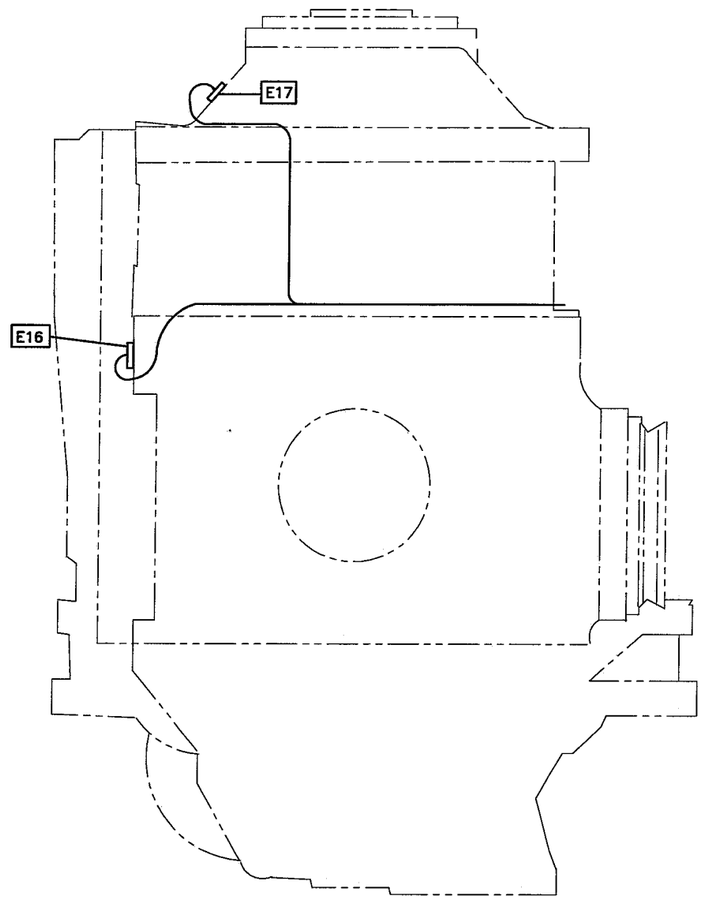

WIRING ROUTING – TRANSMISSION

DESIGN: RD	DRAWN BY: RD	DART AEROSPACE LTD, HAWKESBURY, ONTARIO, CANADA	
CHECKED: RD	APPROVED:	DRAWING NO.: D212-725-8	REV. B, SHEET 8 OF 8
DATE: 07.01.30		TITLE: WIRING ROUTING – TRANSMISSION	SCALE: NTS

Copyright 2006 by DART AEROSPACE LTD

WIRING ROUTING REVISIONS LIST

WIRING DIAGRAM NUMBER BHT-212-MM	WIRING ROUTING D212-725-8-G2	SHEET #	REV	DATE	NOTES
N/A	N/A	I	A	08.03.14	-Wiring routing revisions list sheet 1
CHAPTER 96	WIRING ROUTING ROOF	1	A	08.03.14	-New issue for Generation 2 helicopters
CHAPTER 96	WIRING ROUTING FLOOR	2	A	08.03.14	-New issue for Generation 2 helicopters
CHAPTER 96	WIRING ROUTING UPPER NOSE AREA	3	A	08.03.14	-New issue for Generation 2 helicopters
CHAPTER 96	WIRING ROUTING	4	A	08.03.14	-New issue for Generation 2 helicopters
CHAPTER 96	WIRING ROUTING FWD HELLHOLE	5	A	08.03.14	-New issue for Generation 2 helicopters
CHAPTER 96	WIRING ROUTING AFT HELLHOLE	6	A	08.03.14	-New issue for Generation 2 helicopters
CHAPTER 96	WIRING ROUTING TAIL	7	A	08.03.14	-New issue for Generation 2 helicopters
CHAPTER 96	WIRING ROUTING TRANSMISSION	8	A	08.03.14	-New issue for Generation 2 helicopters

DESIGN	RD
DRAWN	RD
CHECKED	RD
MFG. APPR.	N/A
APPROVED	
DE APPR.	
DATE	08.03.14

DART AEROSPACE LTD
HAWKESBURY, ONTARIO, CANADA

DRAWING NO. D212-725-8-G2 REV. A
SHEET I OF I
TITLE WIRING ROUTING DIAGRAMS SCALE NTS

COPYRIGHT © 2008 BY DART AEROSPACE LTD
THIS DOCUMENT IS PRIVATE AND CONFIDENTIAL AND IS SUPPLIED ON THE EXPRESS CONDITION THAT IT IS NOT TO BE USED FOR ANY PURPOSE OR COPIED OR COMMUNICATED TO ANY OTHER PERSON WITHOUT WRITTEN PERMISSION FROM DART AEROSPACE LTD.

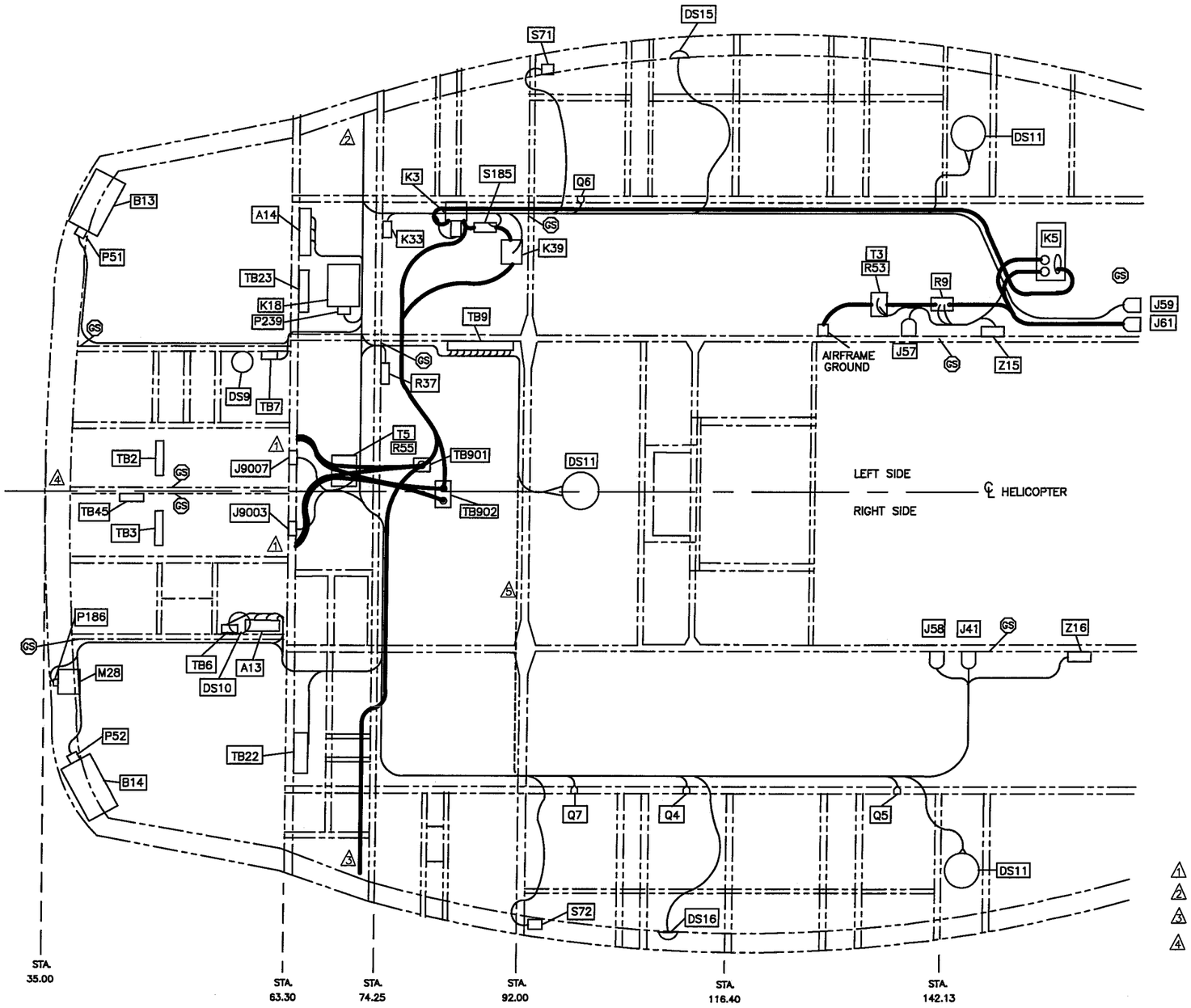

1. CABLES ROUTE INTO CB PANELS.
2. WIRE BUNDLE ROUTES DOWN LH SIDEWALL.
3. CABLE ROUTES DOWN RH SIDEWALL TO LOWER NOSE COMPARTMENT.
4. INSTALL GROUND STUDS AS INDICATED BY (GS)
   INSTALL GROUND STUDS I.A.W. BHT–ELEC–SPM

WIRING ROUTING – ROOF

VIEW LOOKING UP AT LOWER ROOF STRUCTURE

(EFFECTIVE ON ALL S/N, EXCEPT 30687, 30931, 30576, 30817 & 30599)

DESIGN: RD	DRAWN BY: RD	DART AEROSPACE LTD, HAWKESBURY, ONTARIO, CANADA	
CHECKED: RD	APPROVED:	DRAWING NO.: D212-725-8-G2	REV. A, SHEET 1 OF 8
DATE: 08.03.14		TITLE: WIRING ROUTING – ROOF	SCALE: NTS

Copyright 2008 by DART AEROSPACE LTD

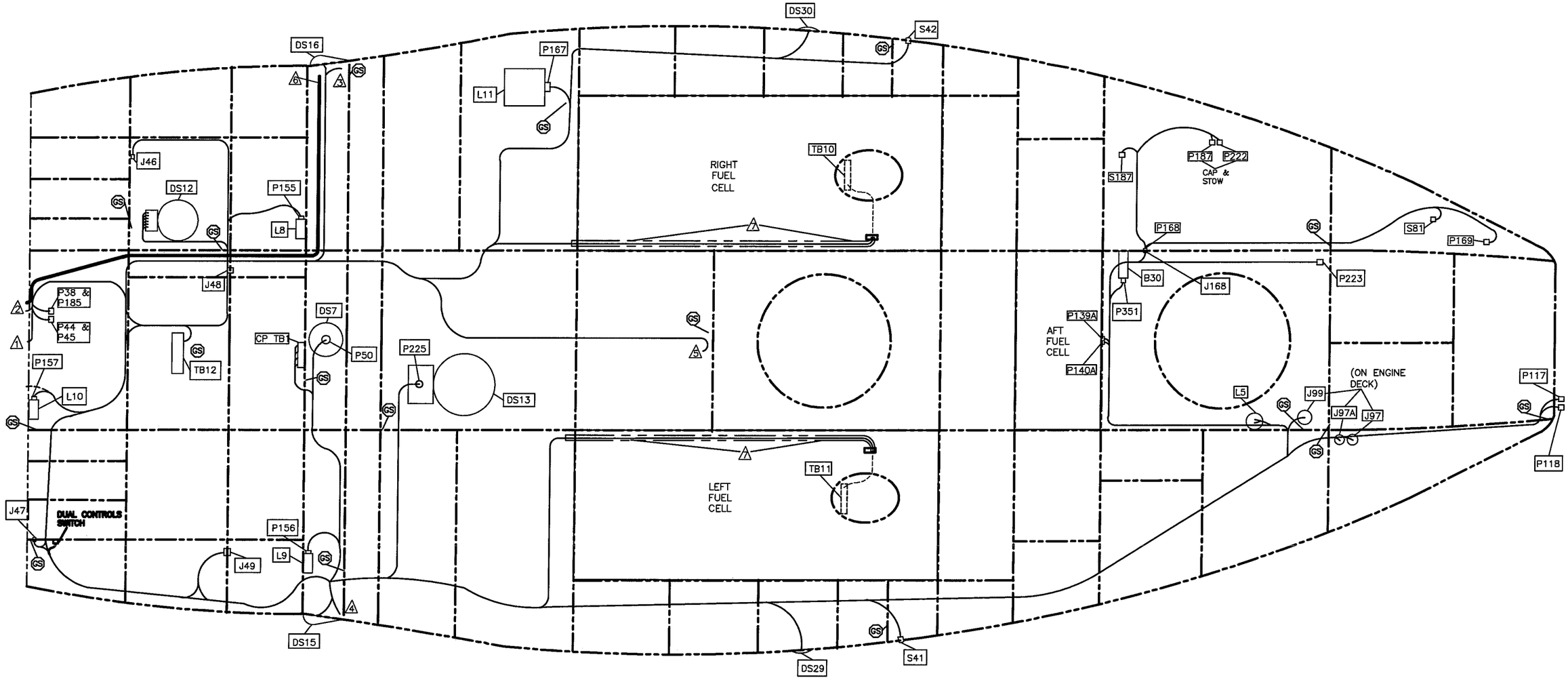

1. WIRE BUNDLE ROUTES UP TO CB PANEL DISCONNECTS.
2. WIRE BUNDLE ROUTES FORWARD TO LOWER NOSE COMPARTMENT.
3. WIRE BUNDLE ROUTES UP RH SIDEWALL TO Z55 & DS26.
4. WIRE BUNDLE ROUTES UP LH SIDEWALL FOR CEILING WIRE RUNS.
5. **WIRE BUNDLE IS CAPPED AND STOWED UNLESS LONGLINE/HELITORCH SYSTEM INSTALLED**
6. CABLE ROUTES UP RH SIDEWALL TO TB901
7. WIRING TO BE ENCLOSED IN TYGON R-3603 TUBING (Or Equivalent) INSIDE LEFT & RIGHT FUEL CELL AREA
8. INSTALL GROUND STUDS AS INDICATED BY (GS)
   INSTALL GROUND STUDS I.A.W. BHT-ELEC-SPM

WIRING ROUTING – FLOOR

VIEW LOOKING DOWN AT FLOOR STRUCTURE

(EFFECTIVE ON ALL S/N, EXCEPT 30687, 30931, 30576, 30817 & 30599)

DESIGN	DRAWN BY	DART AEROSPACE LTD HAWKESBURY, ONTARIO, CANADA	
RD	RD		
CHECKED	APPROVED	DRAWING NO.	REV. A
RD		D212-725-8-G2	SHEET 2 OF 8
DATE		TITLE	SCALE
08.03.14		WIRING ROUTING – FLOOR	NTS

Copyright 2008 by DART AEROSPACE LTD

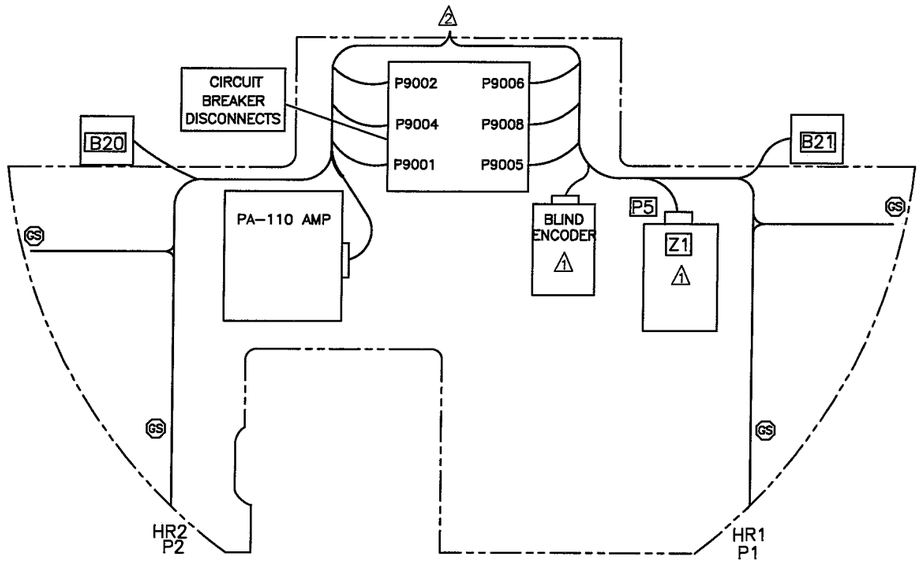

UPPER SHELF – TOP SIDE

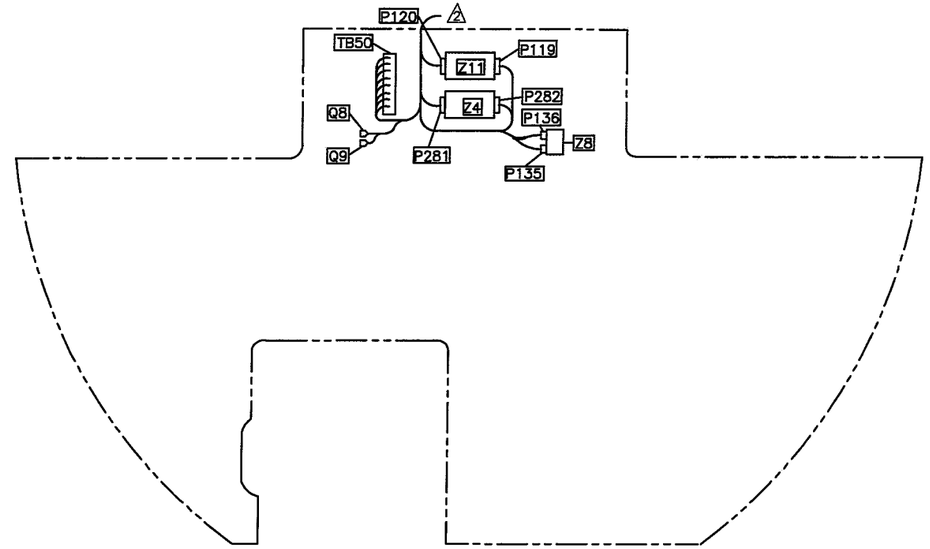

UPPER SHELF – BOTTOM SIDE

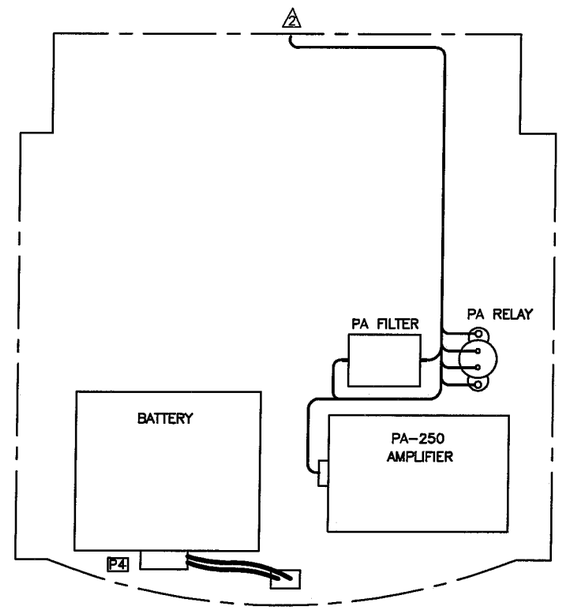

LOWER SHELF – BOTTOM SIDE
(EFFECTIVE ON ALL S/N, EXCEPT 30687, 30931, 30576, 30817 & 30599)

NOTES:

1. COMPONENT PLACEMENT MAY VARY DUE TO AVIONICS INSTALLATIONS
2. WIRE BUNDLE ROUTES TO MAIN BUNDLE.
3. INSTALL GROUND STUDS AS INDICATED BY (GS) INSTALL GROUND STUDS I.A.W. BHT-ELEC-SPM

DESIGN	DRAWN BY	DART AEROSPACE LTD HAWKESBURY, ONTARIO, CANADA	
RD	RD		
CHECKED	APPROVED	DRAWING NO.	REV. A
RD		D212-725-8-G2	SHEET 3 OF 8
DATE		TITLE	SCALE
08.03.14		WIRING ROUTING – UPPER NOSE AREA	NTS

Copyright 2008 by DART AEROSPACE LTD

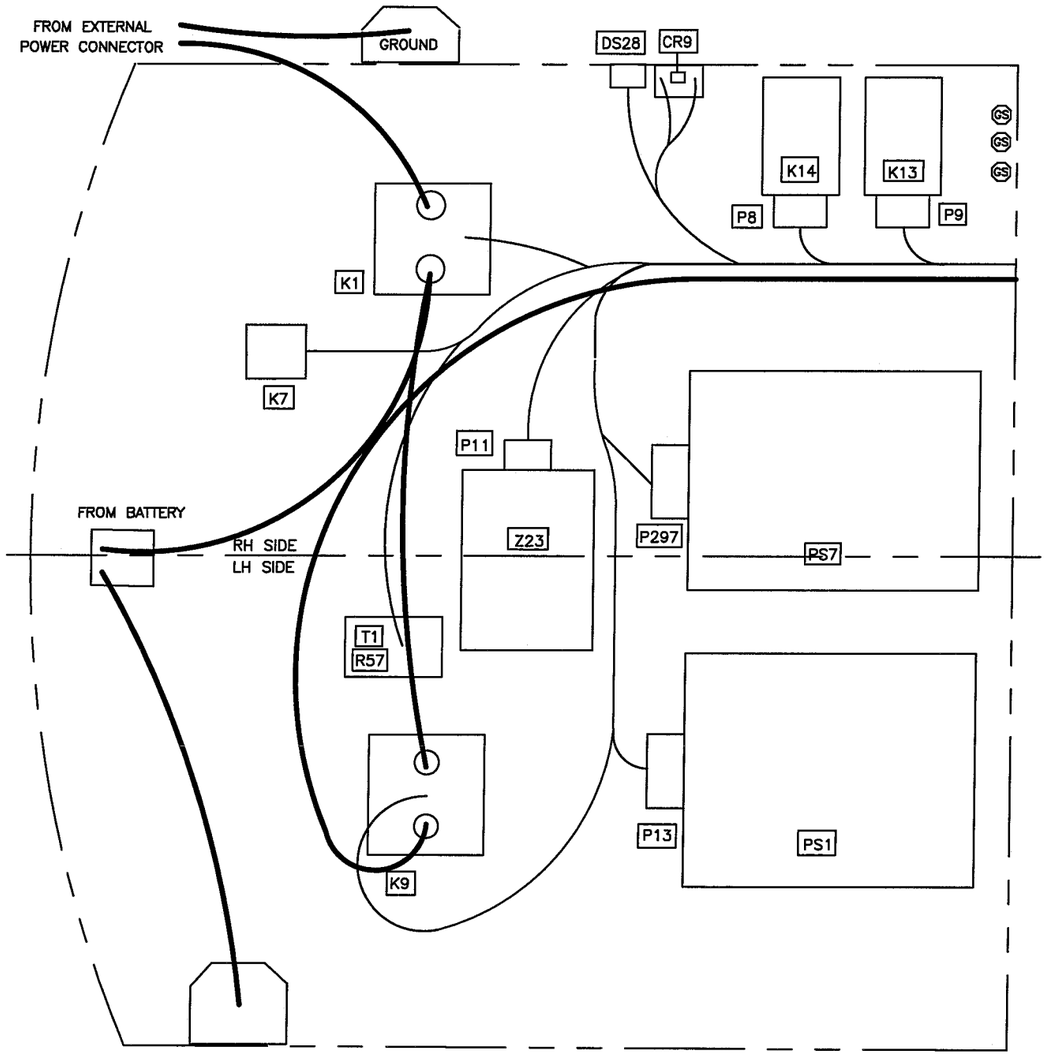

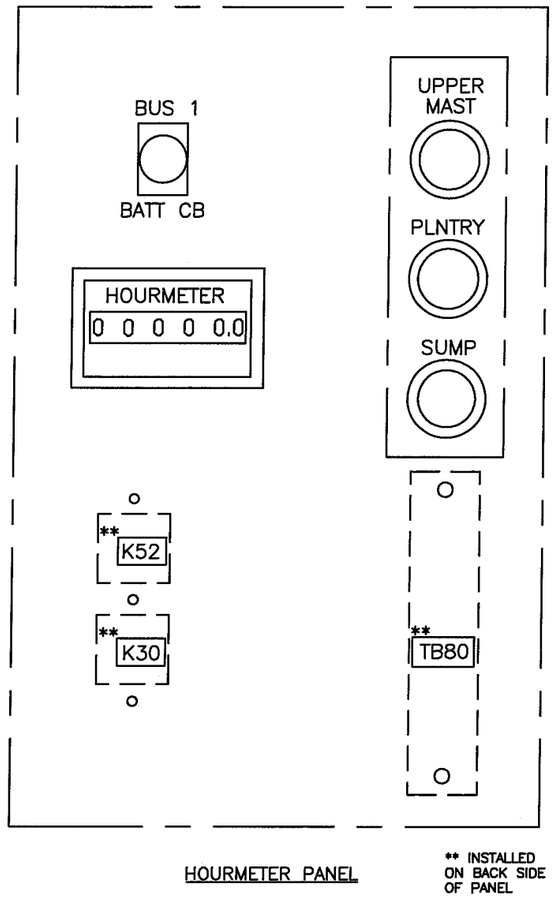

HOURMETER PANEL

** INSTALLED ON BACK SIDE OF PANEL

⚠ INSTALL GROUND STUDS AS INDICATED BY (GS)
INSTALL GROUND STUDS I.A.W. BHT–ELEC–SPM

WIRING ROUTING – LOWER NOSE COMPARTMENT

(EFFECTIVE ON ALL S/N, EXCEPT 30687, 30931, 30576, 30817 & 30599)

DESIGN: RD	DRAWN BY: RD	DART AEROSPACE LTD, HAWKESBURY, ONTARIO, CANADA	
CHECKED: RD	APPROVED: HR	DRAWING NO.: D212–725–8–G2	REV. A
DATE: 08.03.14		TITLE: WIRING ROUTING	SHEET 4 OF 8 / SCALE: NTS

Copyright 2008 by DART AEROSPACE LTD

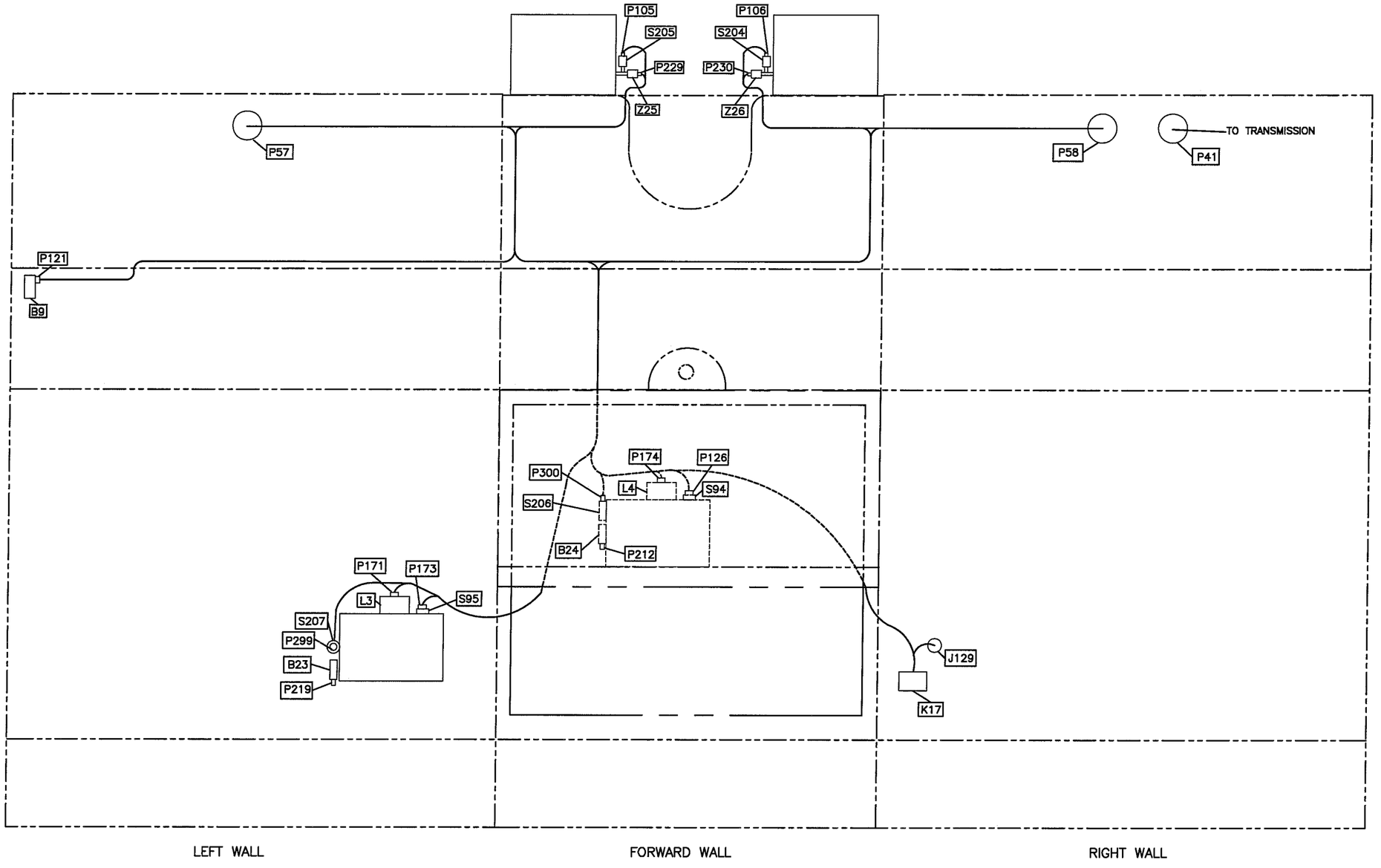

WIRING ROUTING – FWD HELLHOLE

(EFFECTIVE ON ALL S/N, EXCEPT 30687, 30931, 30576, 30817 & 30599)

DESIGN: RD	DRAWN BY: RD	DART AEROSPACE LTD, HAWKESBURY, ONTARIO, CANADA	
CHECKED: RD	APPROVED	DRAWING NO.: D212-725-8-G2	REV. A
DATE: 08.03.14		TITLE: WIRING ROUTING – FWD HELLHOLE	SHEET 5 OF 8, SCALE: NTS

Copyright 2008 by DART AEROSPACE LTD

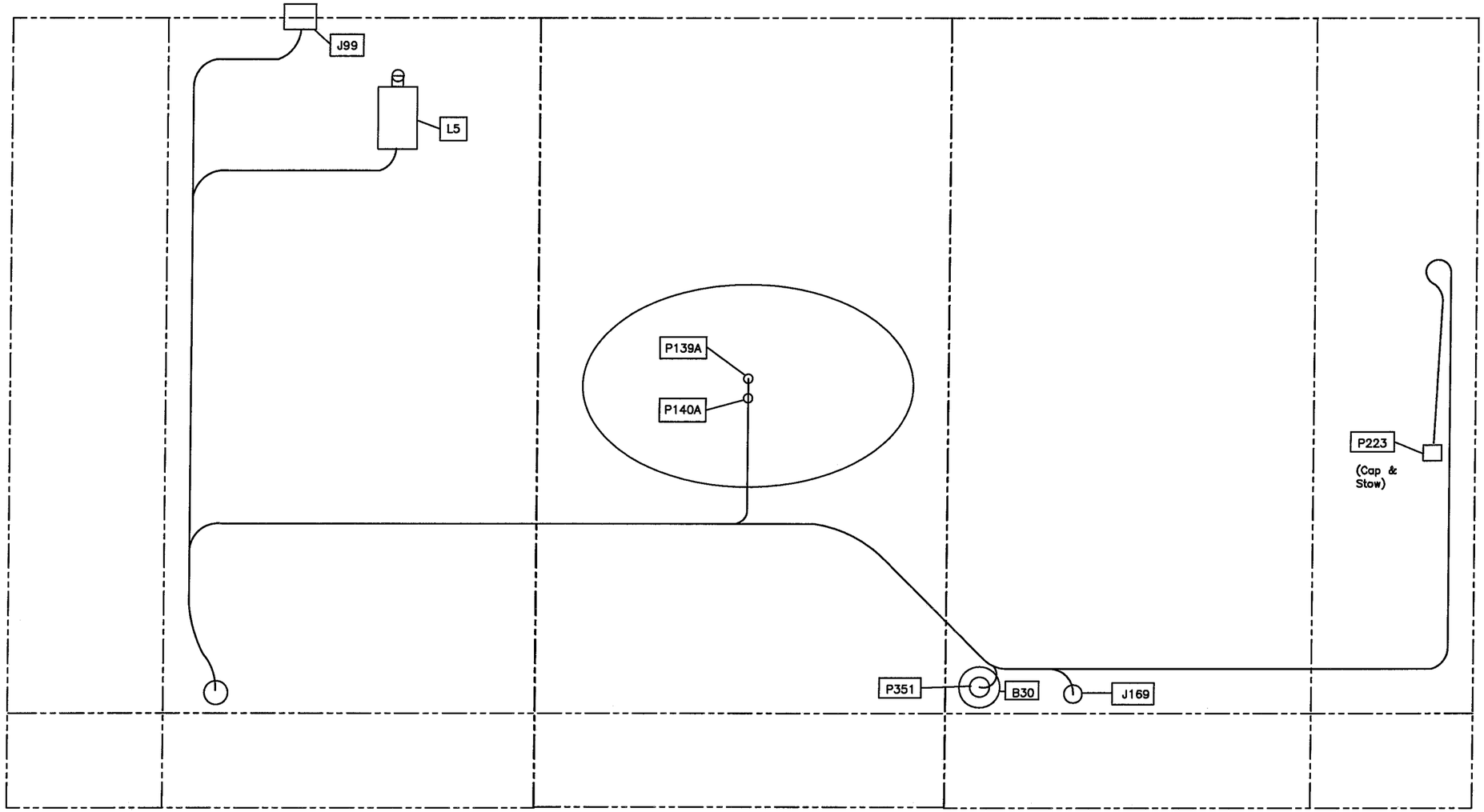

WIRING ROUTING – AFT HELLHOLE

(EFFECTIVE ON ALL S/N, EXCEPT 30687, 30931, 30576, 30817 & 30599)

DESIGN: RD	DRAWN BY: RD	DART AEROSPACE LTD, HAWKESBURY, ONTARIO, CANADA	
CHECKED: RD	APPROVED: HW	DRAWING NO.: D212-725-8-G2	REV. A
DATE: 08.03.14		TITLE: WIRING ROUTING – AFT HELLHOLE	SHEET 6 OF 8, SCALE: NTS

Copyright 2008 by DART AEROSPACE LTD

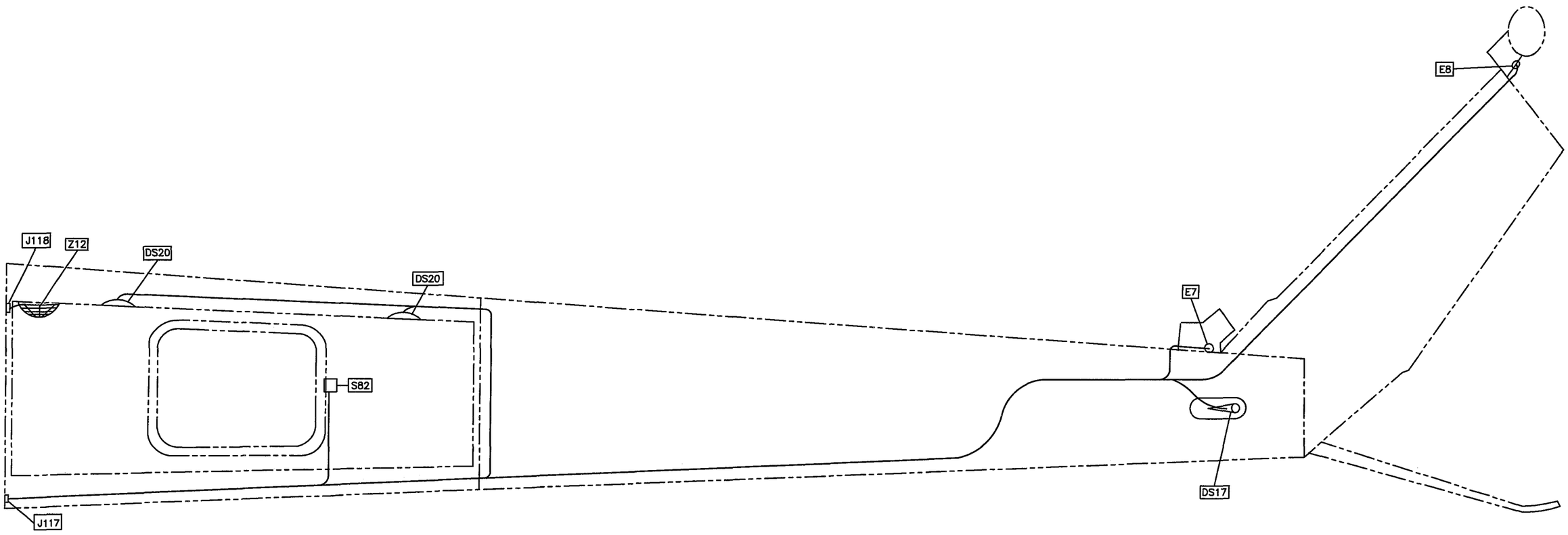

WIRING ROUTING – TAIL

(EFFECTIVE ON ALL S/N, EXCEPT 30687, 30931, 30576, 30817 & 30599)

DESIGN	DRAWN BY	DART AEROSPACE LTD HAWKESBURY, ONTARIO, CANADA	
RD	RD		
CHECKED	APPROVED	DRAWING NO.	REV. A
RD		D212-725-8-G2	SHEET 7 OF 8
DATE		TITLE	SCALE
08.03.14		WIRING ROUTING – TAIL	NTS

Copyright 2008 by DART AEROSPACE LTD

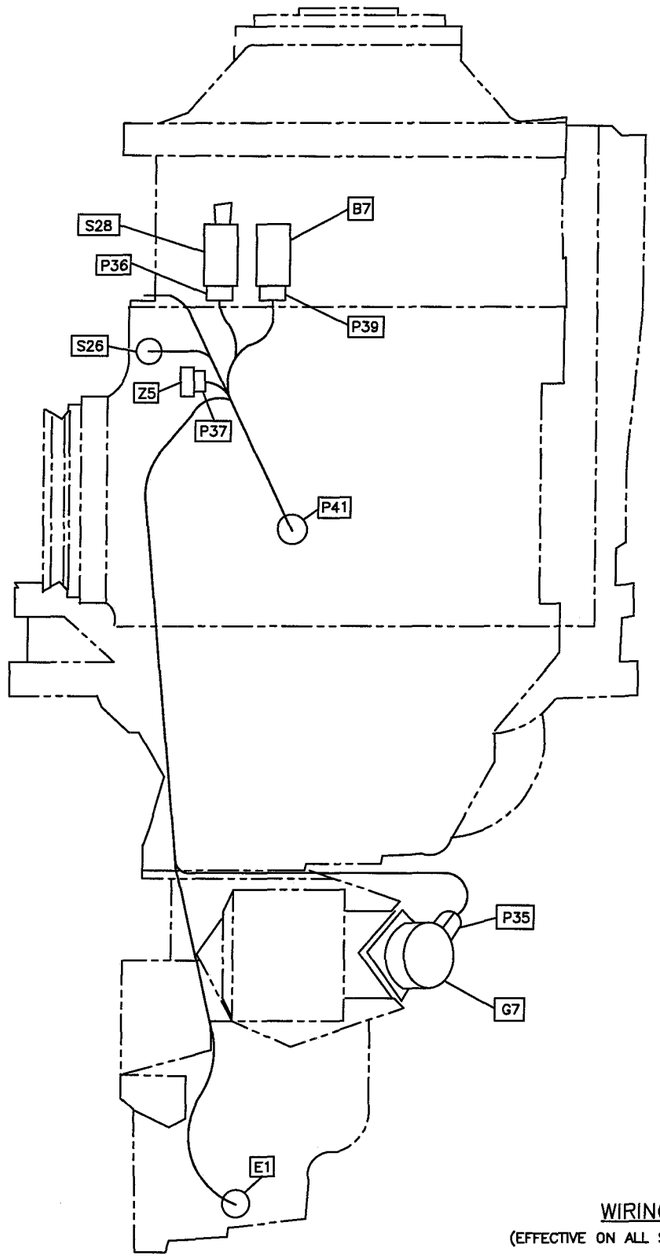

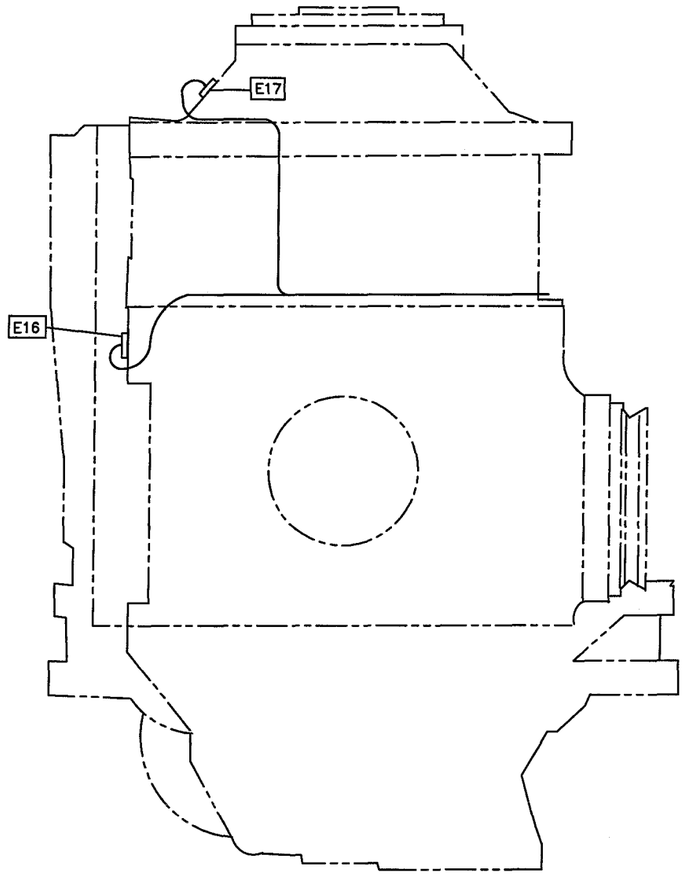

WIRING ROUTING – TRANSMISSION

(EFFECTIVE ON ALL S/N, EXCEPT 30687, 30931, 30576, 30817 & 30599)

DESIGN: RD	DRAWN BY: RD	DART AEROSPACE LTD, HAWKESBURY, ONTARIO, CANADA	
CHECKED: RD	APPROVED:	DRAWING NO.: D212-725-8-G2	REV. A, SHEET 8 OF 8
DATE: 08.03.14		TITLE: WIRING ROUTING – TRANSMISSION	SCALE: NTS

Copyright 2008 by DART AEROSPACE LTD

CHAPTER 97
AVIONICS
(97-00-00)

• COPYRIGHT © 2023 BY EAGLE COPTERS MAINTENANCE LTD. •
THIS DOCUMENT IS PRIVATE AND CONFIDENTIAL AND IS SUPPLIED ON THE EXPRESS CONDITION THAT IT IS NOT TO BE USED FOR ANY PURPOSE OR COPIED OR COMMUNICATED TO ANY OTHER PERSON WITHOUT WRITTEN PERMISSION FROM EAGLE COPTERS MAINTANENCE LTD.

CHAPTER 97 – AVIONICS (97-00-00)

TABLE OF CONTENTS

97.1. AVIONICS SYSTEMS 3
97.2. TROUBLESHOOTING – AVIONICS SYSTEMS 3
97.3. CONFIGURATION 4
97.4. ELT SYSTEM 5
97.5. FUNCTIONAL TEST – ELT SYSTEM 5
97.6. TB-E212-725-2 PA SYSTEM 6
97.7. REMOVAL – PA LOUDSPEAKER 6
97.8. INSTALL – PA LOUDSPEAKER 6
97.9. REMOVAL – PA AMPLIFIER 6
97.10. INSTALL – PA AMPLIFIER 6
97.11. REMOVAL – PA CONTROLLER 6
97.12. INSTALL – PA CONTROLLER 6
97.13. REMOVAL – CABIN SPEAKERS 6
97.14. INSTALL – CABIN SPEAKERS 6
97.15. REMOVAL – CABIN AMPLIFIER 6
97.16. INSTALL – CABIN AMPLIFIER 6
97.17. FUNCTIONAL TEST – PA SYSTEM 7
97.18. TB-E212-725-3 GLOVE BOX AND USB INSTALLATION 8
97.19. REMOVAL – JA72-006 GLOVE BOX 8
97.20. INSTALL – JA72-006 GLOVE BOX 8
97.21. REMOVAL – JA70-009 GLOVE BOX 8
97.22. INSTALL – JA70-009 GLOVE BOX 8
97.23. REMOVAL – USB CHARGERS 8
97.24. INSTALL – USB CHARGERS 8
97.25. FUNCTIONAL TEST – GLOVE BOX AUDIO 9
97.26. FUNCTIONAL TEST – USB CHARGERS 9
97.27. TB-E212-725-4 UTILITY POWER PLUG INSTALLATION 10
97.28. REMOVAL – UTILITY POWER PLUG 10
97.29. INSTALL – UTILITY POWER PLUG 10
97.30. FUNCTIONAL TEST – UTILITY POWER PLUG 10

LIST OF FIGURES

Figure 97-1 - ELT AND REMOTE SWITCH PANEL 5
Figure 97-2 - PA SYSTEM 7
Figure 97-3 - GLOVE BOX AND USB INSTALLATION 9
Figure 97-4 - UTILITY POWER PLUG INSTALLATION 10

• COPYRIGHT © 2023 BY EAGLE COPTERS MAINTENANCE LTD. •
THIS DOCUMENT IS PRIVATE AND CONFIDENTIAL AND IS SUPPLIED ON THE EXPRESS CONDITION THAT IT IS NOT TO BE USED FOR ANY PURPOSE OR COPIED OR COMMUNICATED TO ANY OTHER PERSON WITHOUT WRITTEN PERMISSION FROM EAGLE COPTERS MAINTANENCE LTD.

CHAPTER 97 – AVIONICS (97-00-00)

97.1. AVIONICS SYSTEMS

Maintenance of avionics circuitry and avionics equipment is presented in the following text.

All Avionics control panels are located in the center pedestal and most of the equipment is self contained, with the exception of the installation of some equipment in the nose area of the helicopter or on the underside of the helicopter.

The avionics systems are powered through two circuit breaker switches, one for the essential avionics buss and one for the non-essential avionics buss, which are located on the left overhead panel along with associate circuit breakers located on the left and right overhead panels.

Avionics system wiring installation, connection, termination, and/or repair shall be carried out in accordance with Bell Electrical Standard Practices Manual (BHT-ELEC-SPM), and/or AC 43.13-1B, Chapter 11, Aircraft Electrical Systems.

NOTE:
Throughout this chapter, when performing operational checks, external power should be utilized whenever possible. Circuit breakers and switches are considered to be in their normal position. Perform operational checks after equipment is replaced or airframe wring is repaired or replaced.

97.2. TROUBLESHOOTING – AVIONICS SYSTEMS

The following procedures are recommended as a guide to locate malfunctions in avionics systems. Obvious and/or easiest to check should be accomplished first.

Procedures need not be performed in order listed.

97.2.1. Check that electrical power is supplied from power source to receiving unit. (Refer to applicable wiring diagrams in Chapter 98).

97.2.2. Verify that switches, relays and diodes are functioning properly.

97.2.3. Check wiring, connectors, and connections for normal condition.

97.2.4. Verify that electrical unit is not defective.

• COPYRIGHT © 2023 BY EAGLE COPTERS MAINTENANCE LTD. •
THIS DOCUMENT IS PRIVATE AND CONFIDENTIAL AND IS SUPPLIED ON THE EXPRESS CONDITION THAT IT IS NOT TO BE USED FOR ANY PURPOSE OR COPIED OR COMMUNICATED TO ANY OTHER PERSON WITHOUT WRITTEN PERMISSION FROM EAGLE COPTERS MAINTANENCE LTD.

CHAPTER 97 – AVIONICS (97-00-00)

97.3. CONFIGURATION

Every aircraft will be modified with a slightly different Avionics package to suit individual customer requirements/preferences. The following Avionics Equipment may/may not be installed.

DESCRIPTION	MANUFACTURER	P/N
VHF Comm 1/2	Bendix King	KY196A
FM 1/2	Technisonic	TFM 138B
FM 1/2	Technisonic	TFM 550
Transponder	Bendix King	KT76C
Pilot/PAX Audio Panel	NAT	AMS 42/44
VHF Comm 1/2	GARMIN	SL30
Transponder	GARMIN	GTX-330
PA Controller	NAT	AA21
FM 1/2	Technisonic	TDFM 136
GPS	Garmin	GNS-430

The owner/operator should consult the manufacturer for information regarding installation, functional testing, and operation of the above equipment.

Avionics wiring diagrams for each aircraft modified per SH07-28 will be provided by Eagle Copters. See Chapter 98 for general and aircraft specific wiring diagrams.

• COPYRIGHT © 2023 BY EAGLE COPTERS MAINTENANCE LTD. •
THIS DOCUMENT IS PRIVATE AND CONFIDENTIAL AND IS SUPPLIED ON THE EXPRESS CONDITION THAT IT IS NOT TO BE USED FOR ANY PURPOSE OR COPIED OR COMMUNICATED TO ANY OTHER PERSON WITHOUT WRITTEN PERMISSION FROM EAGLE COPTERS MAINTANENCE LTD.

CHAPTER 97 – AVIONICS (97-00-00)

97.4. ELT SYSTEM

The ELT system consists of the ELT, a remote switch panel, and an antenna. The ELT activates automatically in the event of a crash through the 'G-switch' and transmits a standard sweep tone on 121.5 MHz, 243 MHz, and 406 MHz. The unit can be programmed to transmit the aircraft's 24-bit address and it's latitude and longitude using and ELT/NAV interface unit. The ELT is mounted on the door post just aft of the pilots seat.

The remote switch panel is located on the instrument panel and can only be used to test and reset the ELT. The switch cannot be used to disarm or deactivate the ELT. A blinking light on the remote switch panels indicates that the ELT is activate.

97.5. FUNCTIONAL TEST – ELT SYSTEM

NOTE
Always perform the ELT test within five minutes after the hour and be sure to advise the local control tower of your intentions.

97.5.1. Supply electrical power to the helicopter and ensure the Non-Ess Buss is also powered.

97.5.2. Tune either VHF radio to 121.5 MHz.

97.5.3. Turn the ELT switch on the remote switch panel to ON and wait for 3 sweeps on the receiver, which takes about one second. Verify that the light on the remote switch panel illuminates.

97.5.4. Return the ELT switch on the remote switch panel to ARM and verify that the light extinguishes.

97.5.5. Remove electrical power from the helicopter if no longer required.

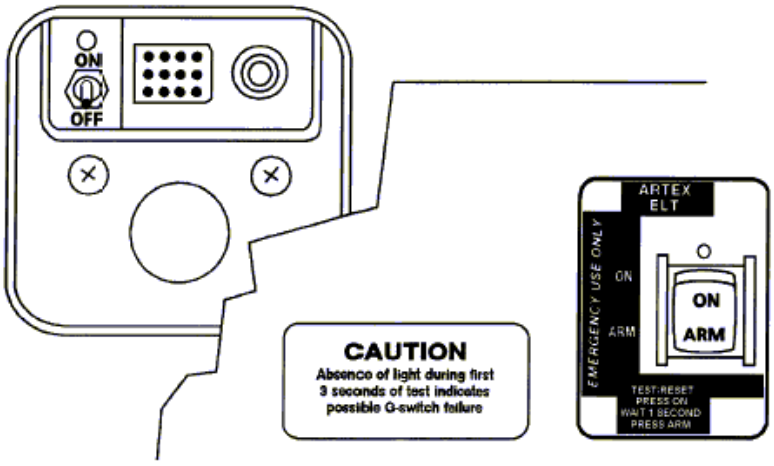

Figure 97-1 - ELT AND REMOTE SWITCH PANEL

• COPYRIGHT © 2023 BY EAGLE COPTERS MAINTENANCE LTD. •
THIS DOCUMENT IS PRIVATE AND CONFIDENTIAL AND IS SUPPLIED ON THE EXPRESS CONDITION THAT IT IS NOT TO BE USED FOR ANY PURPOSE OR COPIED OR COMMUNICATED TO ANY OTHER PERSON WITHOUT WRITTEN PERMISSION FROM EAGLE COPTERS MAINTANENCE LTD.

CHAPTER 97 – AVIONICS (97-00-00)

97.6. TB-E212-725-2 PA SYSTEM

NOTE
This section is only applicable to aircraft that have the optional TB-E212-725-2 PA System installed.

97.6.1. The external PA system consists of the PA Loudspeaker mounted on the belly, Loudspeaker controller in the cockpit, and loudspeaker amplifier on the nose avionics shelf.

97.6.2. The internal PA system consists of the cabin PA amplifier and six speakers installed in the cabin roof.

97.7. REMOVAL – PA LOUDSPEAKER

Remove the Loudspeaker (PN TS300), Speaker Bracket Assy (PN E212-725-9-02-1-041) and Plate (PN E212-725-9-03-1-001) in accordance with drawing E212-725-9-01-1 PA Loudspeaker Instl.

97.8. INSTALL – PA LOUDSPEAKER

Install the Loudspeaker (PN TS300), Speaker Bracket Assy (PN E212-725-9-02-1-041) and Plate (PN E212-725-9-03-1-001) in accordance with drawing E212-725-9-01-1 PA Loudspeaker Instl.

97.9. REMOVAL – PA AMPLIFIER

Remove the Loudspeaker Amplifier (PN LSA300-001) in accordance with drawing E212-725-9-01-2 PA Amplifier Instl.

97.10. INSTALL – PA AMPLIFIER

Install the Loudspeaker Amplifier (PN LSA300-001) in accordance with drawing E212-725-9-01-2 PA Amplifier Instl.

97.11. REMOVAL – PA CONTROLLER

Unlock the four (4) Dzus fasteners by rotating them a quarter turn counter clockwise. Gently lift up on the PA control panel until the connectors are accessible. Disconnect the Connectors and cap and stow the wiring harness.

97.12. INSTALL – PA CONTROLLER

Remove the wiring harness from its stowed position and remove any caps. Connect the connectors to the rear of the PA control panel and carefully slide the unit back into the centre pedestal. Lock the four (4) Dzus fasteners by rotating them a quarter turn clockwise. Test the system per Chapter 97.13 Functional Test - PA System.

97.13. REMOVAL – CABIN SPEAKERS

97.13.1. Remove the Internal Speakers (PN FC6S-4FR-I) in accordance with drawing E212-5005 PA Speaker Mount Instl.

97.14. INSTALL – CABIN SPEAKERS

97.14.1. Install the Internal Speakers (PN FC6S-4FR-I) in accordance with drawing E212-5005 PA Speaker Mount Instl.

97.15. REMOVAL – CABIN AMPLIFIER

97.15.1. Remove the Cabin PA Amplifier (PN LSA100-100) in accordance with drawing E212-725-9-01-2 PA Amplifier Instl.

97.16. INSTALL – CABIN AMPLIFIER

97.16.1. Install the Cabin PA Amplifier (PN LSA100-100) in accordance with drawing E212-725-9-01-2 PA Amplifier Instl.

• COPYRIGHT © 2023 BY EAGLE COPTERS MAINTENANCE LTD. •
THIS DOCUMENT IS PRIVATE AND CONFIDENTIAL AND IS SUPPLIED ON THE EXPRESS CONDITION THAT IT IS NOT TO BE USED FOR ANY PURPOSE OR COPIED OR COMMUNICATED TO ANY OTHER PERSON WITHOUT WRITTEN PERMISSION FROM EAGLE COPTERS MAINTANENCE LTD.

CHAPTER 97 – AVIONICS (97-00-00)

97.17. FUNCTIONAL TEST – PA SYSTEM

CAUTION

THE PA SYSTEM IS CAPABLE OF PRODUCING HIGH SOUND PRESSURE LEVELS. SET THE VOLUME CONTROLS TO THE MINIMUM VOLUME SETTINGS PRIOR TO CONDUCTING TEST AND SLOWLY INCREASE THE VOLUME. PROPER PERSONAL PROTECTIVE EQUIPMENT IS REQUIRED TO PREVENT HEARING DAMAGE.

97.17.1. Supply electrical power to the helicopter and ensure the Non-Ess Buss is also powered.

97.17.2. Ensure Siren WAIL/YELP switch is in the center "OFF" position and ensure the audio system is powered on.

97.17.3. Turn the 'VOL/PWR' knob, on the face of the LSC22 speaker control panel, to the 'ON' position and lowest volume setting.

97.17.4. Select 'EXT PA' on the LSC22 'EXT PA/INT PA' switch.

97.17.5. Select 'MIC' on the 'MIC/RADIO' switch.

97.17.6. Select 'PA' on the Audio Panel Control.

97.17.7. Press pilot cyclic transmit switch and speak into the headset microphone.

97.17.8. Verify microphone audio from the speakers. LSC22 volume control may need to be adjusted to hear audio.

97.17.9. Repeat steps 97.17.6 to 97.17.8 from the co-pilot's seat.

97.17.10. Move LSC22-001 'MIC/RADIO' switch to center position.

97.17.11. Select 'YELP' on the Audio Control Panel and verify loudspeaker audio.

97.17.12. Select 'WAIL' on the Audio Control Panel and verify loudspeaker audio.

97.17.13. If internal PA is not installed, proceed to step 97.17.17. If internal PA is installed, select 'INT PA' on the LSC22-003N 'EXT PA/INT PA' switch.

97.17.14. Select 'MIC' on the 'MIC/RADIO' switch.

97.17.15. Press pilot cyclic transmit switch and speak into the headset microphone.

97.17.16. Verify microphone audio from the internal speakers. LSC22 volume control may need to be adjusted to hear audio.

97.17.17. Turn LSC22 control panel 'VOL/PWR' knob to 'OFF'.

97.17.18. Remove electrical power from the helicopter if no longer required.

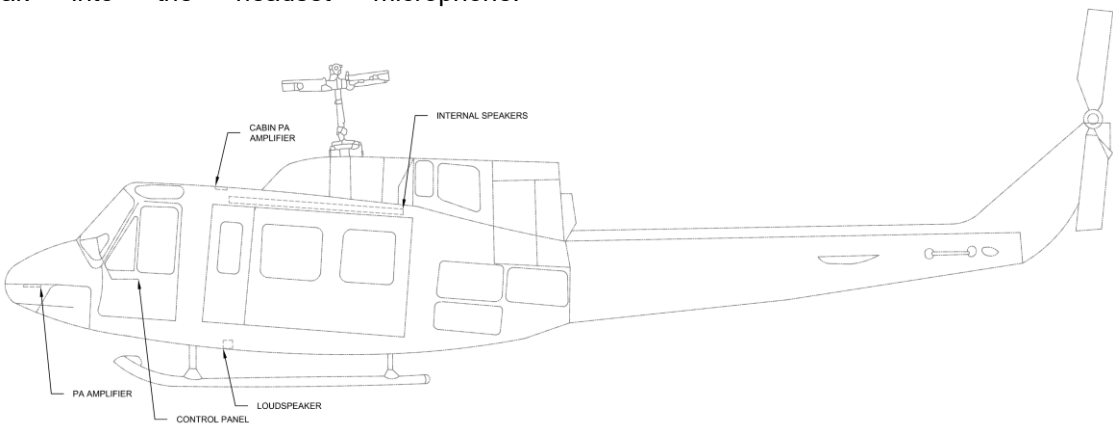

Figure 97-2 - PA SYSTEM

• COPYRIGHT © 2023 BY EAGLE COPTERS MAINTENANCE LTD. •
THIS DOCUMENT IS PRIVATE AND CONFIDENTIAL AND IS SUPPLIED ON THE EXPRESS CONDITION THAT IT IS NOT TO BE USED FOR ANY PURPOSE OR COPIED OR COMMUNICATED TO ANY OTHER PERSON WITHOUT WRITTEN PERMISSION FROM EAGLE COPTERS MAINTANENCE LTD.

CHAPTER 97 – AVIONICS (97-00-00)

97.18. TB-E212-725-3 GLOVE BOX AND USB INSTALLATION

NOTE
This section is only applicable to aircraft that have the optional TB-E212-725-3 Glove Box and USB Installation.

The Glove Box and USB installation consists of the JA72-006 and JA70-009 Jupiter glove boxes along with two Mid-Content TA202 USB Charging ports that are installed into the rotorcraft centre console. The JA72-006 glove box includes an aux audio port to allow an external audio source to connect to the audio system. Two optional installations include 4 USB charging ports, 2 each located in the door posts.

97.19. REMOVAL – JA72-006 GLOVE BOX

Unlock the four (4) Dzus fasteners by rotating them a quarter turn counter clockwise. Gently lift up on the JA72-006 Glove Box until the connector is accessible. Disconnect the connector and cap and stow the wiring harness.

97.20. INSTALL – JA72-006 GLOVE BOX

Remove the wiring harness from its stowed position and remove any caps. Connect the connector to the rear of the JA72-006 Glove Box and carefully slide the unit back into the centre pedestal. Lock the four (4) Dzus fasteners by rotating them a quarter turn clockwise. Test the system per Chapter 97.21 Functional Test – Glove Box Audio.

97.21. REMOVAL – JA70-009 GLOVE BOX

Unlock the four (4) Dzus fasteners by rotating them a quarter turn counter clockwise. Gently lift up on the JA70-009 Glove Box until the unit is clear of the panel.

97.22. INSTALL – JA70-009 GLOVE BOX

Carefully slide the JA70-009 Glove Box back into the centre pedestal. Lock the four (4) Dzus fasteners by rotating them a quarter turn clockwise.

97.23. REMOVAL – USB CHARGERS

Unlock the four (4) Dzus fasteners holding down the panel by rotating them a quarter turn counter clockwise. Gently lift up on the panel until the connectors at the back of the TA202 USB Chargers are accessible. Disconnect the Connectors and cap and stow the wiring harness.

If the aircraft has TB-E212-725-3-013 and/or -015 installed, remove the faceplates. Gently remove the cover plates that each USB is located in, and detach the receptacles. Disconnect the connectors and cap and stow the wiring harness.

97.24. INSTALL – USB CHARGERS

Remove the wiring harness from its stowed position and remove any caps. Connect the connector to the rear of both of the TA 202 USB Chargers and carefully install the panel back into the centre pedestal. Lock the four (4) Dzus fasteners by rotating them a quarter turn clockwise.

If the aircraft has TB-E212-725-3-013 and/or -015 installed, remove the wiring harness from its stowed position and remove any caps. Connect the chargers and install the receptacles into their corresponding cover plates using the OEM supplied fasteners. Install the OEM cover plates into their corresponding locations.

• COPYRIGHT © 2023 BY EAGLE COPTERS MAINTENANCE LTD. •
THIS DOCUMENT IS PRIVATE AND CONFIDENTIAL AND IS SUPPLIED ON THE EXPRESS CONDITION THAT IT IS NOT TO BE USED FOR ANY PURPOSE OR COPIED OR COMMUNICATED TO ANY OTHER PERSON WITHOUT WRITTEN PERMISSION FROM EAGLE COPTERS MAINTANENCE LTD.

CHAPTER 97 – AVIONICS (97-00-00)

97.25. FUNCTIONAL TEST – GLOVE BOX AUDIO

97.25.1. Supply electrical power to the helicopter and ensure the Non-Ess Buss is also powered.

97.25.2. Ensure the audio system is powered on.

97.25.3. Select 'MP3' on the Audio Panel Control.

97.25.4. Plug an audio device into the Audio I/O jack on the JA72-006.

97.25.5. Ensure the MP3 audio can be heard on the pilot, co-pilot, and crew's headset jacks.

97.25.6. Ensure the MP3 audio is muted when higher priority audio is broadcast (for example COMM1 or COMM2 audio).

97.25.7. Ensure the MP3 audio is muted when TCAS I audio is broadcast.

97.25.8. Remove electrical power from the helicopter if no longer required.

97.26. FUNCTIONAL TEST – USB CHARGERS

97.26.1. Using the appropriate cables, plug USB-charged devices (e.g., personal phone, tablet) into USB ports. Ensure that devices indicate that they are charging normally.

97.26.2. Repeat for all other USB charger installations.

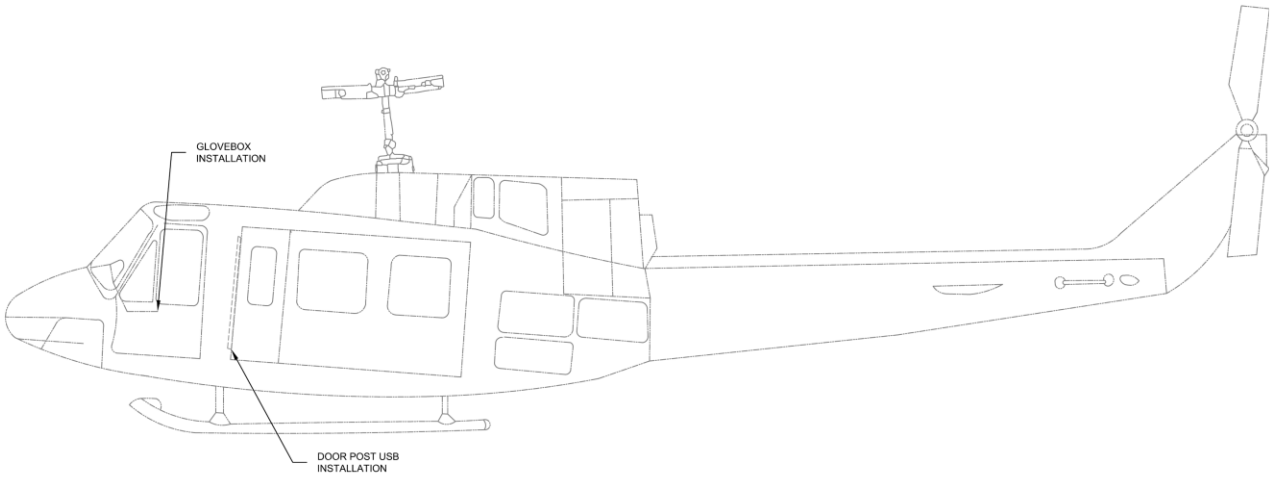

Figure 97-3 - GLOVE BOX AND USB INSTALLATION

• COPYRIGHT © 2023 BY EAGLE COPTERS MAINTENANCE LTD. •
THIS DOCUMENT IS PRIVATE AND CONFIDENTIAL AND IS SUPPLIED ON THE EXPRESS CONDITION THAT IT IS NOT TO BE USED FOR ANY PURPOSE OR COPIED OR COMMUNICATED TO ANY OTHER PERSON WITHOUT WRITTEN PERMISSION FROM EAGLE COPTERS MAINTANENCE LTD.

97.27. TB-E212-725-4 UTILITY POWER PLUG INSTALLATION

NOTE
This section is only applicable to aircraft that have the optional TB-E212-725-4 Utility Power Plug Installation.

The utility power plug is mounted on the side of centre console, on the co-pilots side, near the forward edge. It is used to power operational equipment such as external fuel pumps and other types of operational equipment.

97.28. REMOVAL – UTILITY POWER PLUG

Disconnect the electrical wires from the Connector and cap and stow the wires. Remove the four (4) screws, nuts and washers and retain the hardware. Remove the Utility power plug from the Centre Console.

97.29. INSTALL – UTILITY POWER PLUG

Install the Cannon Plug using the retained four (4) screws, nuts and washers. Reconnect the wires that were previously capped and stowed. Test the system per Chapter 97.26 Functional Test – Utility Power Plug.

97.30. FUNCTIONAL TEST – UTILITY POWER PLUG

97.30.1. Supply electrical power to the helicopter and ensure the Non-Ess Buss is also powered.

97.30.2. Ensure Utility Power Plug is powered on.

97.30.3. Remove electrical power from the helicopter if no longer required.

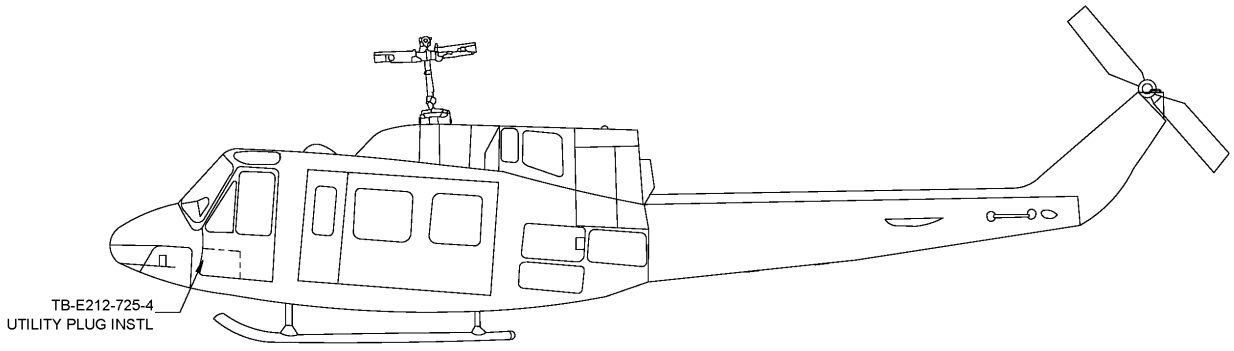

Figure 97-4 - UTILITY POWER PLUG INSTALLATION

• COPYRIGHT © 2023 BY EAGLE COPTERS MAINTENANCE LTD. •
THIS DOCUMENT IS PRIVATE AND CONFIDENTIAL AND IS SUPPLIED ON THE EXPRESS CONDITION THAT IT IS NOT TO BE USED FOR ANY PURPOSE OR COPIED OR COMMUNICATED TO ANY OTHER PERSON WITHOUT WRITTEN PERMISSION FROM EAGLE COPTERS MAINTANENCE LTD.

CHAPTER 98
WIRE DIAGRAMS
(98-00-00)

• COPYRIGHT © 2023 BY EAGLE COPTERS MAINTENANCE LTD. •
THIS DOCUMENT IS PRIVATE AND CONFIDENTIAL AND IS SUPPLIED ON THE EXPRESS CONDITION THAT IT IS NOT TO BE USED FOR ANY PURPOSE OR COPIED OR COMMUNICATED TO ANY OTHER PERSON WITHOUT WRITTEN PERMISSION FROM EAGLE COPTERS MAINTENANCE LTD.

CHAPTER 98 – WIRE DIAGRAMS (98-00-00)

TABLE OF CONTENTS

98.1. WIRING DIAGRAMS 3
98.2. WIRE IDENTIFICATION 3
98.3. SIMPLIFIED ELECTRICAL WIRING SCHEMATICS 3
98.4. EFFECTIVITY 3
98.5. WIRING DATA 3
Appendix A 21

LIST OF FIGURES

Figure 98-1 - Wiring/Equipment Identification Codes 7
Figure 98-2 - Simplified Electrical Schematic 8
Figure 98-3 - Electrical and Electronics Symbols Chart (Sheet 1 of 3) 9
Figure 98-4 - AC Load Analysis Chart 12
Figure 98-5 - AC Load Analysis Chart 12
Figure 98-6 - DC Load Analysis Chart (Sheet 1 of 4) 13
Figure 98-6 - DC Load Analysis Chart (Sheet 2 of 4) 14
Figure 98-6 - DC Load Analysis Chart (Sheet 3 of 4) 15
Figure 98-6 - DC Load Analysis Chart (Sheet 4 of 4) 16
Figure 98-7 - DC Load Analysis Chart (Sheet 1 of 4) 17
Figure 98-7 - DC Load Analysis Chart (Sheet 2 of 4) 18
Figure 98-7 - DC Load Analysis Chart (Sheet 3 of 4) 19
Figure 98-7 - DC Load Analysis Chart (Sheet 4 of 4) 20

• COPYRIGHT © 2023 BY EAGLE COPTERS MAINTENANCE LTD. •
THIS DOCUMENT IS PRIVATE AND CONFIDENTIAL AND IS SUPPLIED ON THE EXPRESS CONDITION THAT IT IS NOT TO BE USED FOR ANY PURPOSE OR COPIED OR COMMUNICATED TO ANY OTHER PERSON WITHOUT WRITTEN PERMISSION FROM EAGLE COPTERS MAINTENANCE LTD.

CHAPTER 98 – WIRE DIAGRAMS (98-00-00)

98.1. WIRING DIAGRAMS

For S/Ns 30687, 30817, and 30599, updated Wiring Diagrams for the modified helicopter can be found on Drawing D212-725-2 located in Appendix A of Chapter 98-00-00. For all S/Ns except 30687, 30817, and 30599 updated wiring diagrams can be found on Drawing D212-725-2-G2 located in Appendix A of Chapter 98-00-00.

This chapter provides wire replacement information, load analysis charts, and system wiring diagrams to assist maintenance personnel in performing maintenance and troubleshooting of electrical and/or components, and tracing of inoperative and/or malfunctioning circuits.

Any electrical system wiring installation, connection, termination, and/or repair shall be carried out in accordance with Bell Electrical Standard Practices Manual (BHT-ELEC-SPM), and/or AC 43.13-1B, Chapter 11, Aircraft Electrical Systems.

WARNING

Failure to follow standard practices may result in damage to aircraft systems and possible injury to personnel.

98.2. WIRE IDENTIFICATION

All wires on wiring diagrams are identified by codes exactly as they are marked in the helicopter. Code or wire number indicates circuit function, wire number, wire segment and wire size. Identification of wires may be accomplished by using wire identification codes in Figure 98-1.

98.3. SIMPLIFIED ELECTRICAL WIRING SCHEMATICS

See Figure 98-2.

98.4. EFFECTIVITY

Effectivity in illustrations and charts is indicated by symbols. Symbols are used in all wiring diagrams, where applicable. The effectivity assigned to each symbol with be noted on individual diagrams or illustrations. If no effectivity is indicated, assume all helicopters are included.

98.5. WIRING DATA

The following data provides recommended wiring replacement part numbers versus wire size requirements, wire construction, wire marking, soldering, wire support and wire stripping.

98.5.1. Wiring Replacement

Samples from each batch and size of the indicated wire types must be tested to the requirements of FAR 25 Appendix F Part 1(b)(7) prior to being used in the helicopter (60 degree Bunsen burner test). Refer to section 98.5.2 for wire type burn test requirements.

• COPYRIGHT © 2023 BY EAGLE COPTERS MAINTENANCE LTD. •
THIS DOCUMENT IS PRIVATE AND CONFIDENTIAL AND IS SUPPLIED ON THE EXPRESS CONDITION THAT IT IS NOT TO BE USED FOR ANY PURPOSE OR COPIED OR COMMUNICATED TO ANY OTHER PERSON WITHOUT WRITTEN PERMISSION FROM EAGLE COPTERS MAINTENANCE LTD.

CHAPTER 98 – WIRE DIAGRAMS (98-00-00)

Condition	Wire Size	Part Number
Open harness — Airframe wiring:	AWG 8 through 00	M22759/2-(+)-9
	AWG 22 through 10	M22759/16-(+)-9 & M22759/41-(+)-9 or M22759/34-(+)-9
	AWG 24	M22759/34-(+)-9
Open harness — Engine compartments high temperature areas:	AWG 8 through 0	M22759/2-(+)-9
	AWG 22 through 10	M22759/41-(+)-9
Shielded and jacketed cable in all areas:	AWG 24 through 12	M27500-(+)TG(*)T14 M27500-(+)SD(*)T14
EGT thermocouple wiring in all areas:	AWG 20 through 16	M5846-2A2/(+)
Control panels, control sticks or assemblies wiring:	Single Conductor 24 through 10	M22759/16-(+)-9 & M22759/41-(+)-9 M22759/34-(+)-9
	Multi-Conductor Shielded Jacketed 24 through 10	M27500-(+)TG(*)T14 M27500-(+)SD(*)T14

+ Indicates AWG wire size
*** Indicates number of conductors 1 thru 7**

• COPYRIGHT © 2023 BY EAGLE COPTERS MAINTENANCE LTD. •
THIS DOCUMENT IS PRIVATE AND CONFIDENTIAL AND IS SUPPLIED ON THE EXPRESS CONDITION THAT IT IS NOT TO BE USED FOR ANY PURPOSE OR COPIED OR COMMUNICATED TO ANY OTHER PERSON WITHOUT WRITTEN PERMISSION FROM EAGLE COPTERS MAINTENANCE LTD.

CHAPTER 98 – WIRE DIAGRAMS (98-00-00)

98.5.2. Wire Type Construction

98.5.2.1 M22759/2: Nickel-plated soft annealed copper with two or more polytetrafluorocarbon (TFE), also referred to as TEFLON, tapes and TFE-coated glass tapes with an overbraid of glass fiber. Wire is rated at 600 volts maximum with a maximum continuous operating temperature of 260 ºC (500 ºF). Flammability testing required.

98.5.2.2 M22759/16: Tin-coated soft annealed copper with a single extrusion of ethylenetetrafluoroethelene copolymer (ETFE), also referred to as TEFZEL. Wire is rated at 600 volts maximum with a maximum continuous operating temperature of 150 ºC (302 ºF). Flammability testing required.

98.5.2.3 M27500-(+)TG(*)T14: Using basic wire M22759/18 with a tin coated soft annealed copper conductor. Wire(s) have an overbraid of tin coated soft annealed copper with an outer jacket of ETFE. M22759/18 is similar to M22759/16 except for thinner wall insulation. Flammability testing required.

98.5.2.4 M22759/41: Nickel-coated soft annealed copper with a single extrusion and a jacket of ETFE, also referred to as TEZFEL. Aromatic polymide overbraid is installed on AWG 2 and larger only. Wire is rated at 600 volts maximum with a maximum continuous operating temperature of 200 ºC (392 ºF). Flammability testing not required.

98.5.2.5 M22759/34: Fluoropolymer-Insulated, Crosslink Modified ETFE, Tin Coated Copper. Wire is rated to 600 V and a maximum continuous operating temperature of 150 ºC (302 ºF). No Flammability testing required.

98.5.2.6 M5846-2A2: Chromel/Alumel Thermocouple Wire. No Flammability testing required.

98.5.2.7 M27500-(+)SD(*)T14: Similar to M27500-(+)TG(*)T14 except based on M22759/34. No Flammability testing required.

98.5.3. Wire Stripping

98.5.3.1 Before any wire can be assembled to connectors, terminals, splices, etc., the insulation must be stripped from the connecting ends to expose the bare conductor.

NOTE

Plier-type hand strippers are the easiest and most reliable to use. Stripping wire with a pocket knife will invariably cut or nick strands and is not an acceptable method of stripping small gauge wire.

98.5.3.2 After the wire has been stripped, it should be inspected for nicked or broken strands. Maximum allowed number of damaged strands is given below:

AWG SIZE	TOTAL ALLOWABLE NICKED OR BROKEN STANDS
24 thru 14	NONE
12	1
10	2
8 thru 4	3
2 thru 00	12

98.5.3.3 Lengthwise scratches on the conductor strands are acceptable and should not be considered cause for rejection or rework.

98.5.4. Wire Marking

98.5.4.1 All wiring installed in the helicopter will be marked for identification purposes in one of three ways;

Hot Stamping, Heat-shrinkable Sleeves, or Cable Markers. (Dot Matrix, Ink Jet, or Laser Marking may be used in place of Hot Stamping).

• COPYRIGHT © 2023 BY EAGLE COPTERS MAINTENANCE LTD. •
THIS DOCUMENT IS PRIVATE AND CONFIDENTIAL AND IS SUPPLIED ON THE EXPRESS CONDITION THAT IT IS NOT TO BE USED FOR ANY PURPOSE OR COPIED OR COMMUNICATED TO ANY OTHER PERSON WITHOUT WRITTEN PERMISSION FROM EAGLE COPTERS MAINTENANCE LTD.

98.5.4.2 Hot stamp marking machine imprinting is the most widely accepted method of identifying wire. Good marking is obtained only by the proper combination of temperature, pressure, dwell, and foil type and is arrived at by trial. When stamping any wire, always use minimum pressure and temperature that produces the desire result.

Personnel should refer to SAE ARP5369, Guidelines for Wire Identification Marking using the Hot Stamp Process, for guidance on minimizing insulation damage. TEFLON insulated wires that cannot be marked by the hot stamp process may be laser marked or identified by imprinting the wire number on heat-shrinkable sleeves installed within 3 inches of each end of the wire and at 15 inch intervals along the length of the wire.

98.5.4.3 Shielded and unshielded twisted pair conducts may be ink jet marked or identified by imprinting the wire number on heat-shrinkable sleeves installed within 3 inches of each end of the wire and at 15 inch intervals along the length of the wire.

98.5.4.4 Cable Markers will be used on all wiring of 8 gauge or larger to identify the wire by code and cable markers will be installed within 3 inches of each end of the wire and at 15 inch intervals along the length of the wire or where practical.

98.5.5. Soldering

98.5.5.1 Tin coated and silver-plated conductors present no unusual problems when soldering is required. Common 60/40 resin solder will produce and acceptable solder joint. With nickel-plated conductors, use of an active flux will help to produce an acceptable solder joint.

98.5.5.2 Kester solder 44 of Kester liquid flux 1544, or equivalent are products which aid in soldering nickel-plated conductors. Care should be used in soldering to prevent wicking of solder under the insulation. Excessive wicking can be determined by visually examining the solder connection.

98.5.6. Wire Support

Conductor breakage can be virtually eliminated with care and attention to the area of wire termination.

For aircraft S/Ns 30687, 30817, and 30599 airframe wiring routing shall be done in accordance with Drawing D212-725-8 located in Appendix A of Chapter 96-00-00. For all S/Ns except 30687, 30817, and 30599, airframe wiring routing shall be done in accordance with Drawing D212-725-8-G2 located in Appendix A of Chapter 96-00-00. Clamping, terminating, and/or repair of the harness shall be done following procedures stated in the Bell Electrical Standard Practices Manual (BHT-ELEC-SPM), and/or AC 43.13-1B, Chapter 11, Aircraft Electrical Systems.

98.5.6.1 Wire must be routed and clamped such that under vibration or maintenance conditions, any flexing of the wire will not occur at the termination of the insulation.

98.5.6.2 Crimp contact connectors should have either a strain relief or a rubber sealing grommet on the rear of the connector.

98.5.6.3 When installing crimp terminals, ensure that the wire is installed far enough in the terminal after crimping the insulation grip of the terminal has contacted the wire insulation.

98.5.6.4 The greatest care should be taken where a solder termination is required on any device mounted in the airframe. Wire breakage as solder joints is usually due to poor soldering techniques that result in excessive wicking of the solder under the wire insulation. Before making a solder connection, place a suitable piece of heat shrinkable sleeving over the solder joint are far as practical and shrink it to its minimum recovery diameter.

• COPYRIGHT © 2023 BY EAGLE COPTERS MAINTENANCE LTD. •
THIS DOCUMENT IS PRIVATE AND CONFIDENTIAL AND IS SUPPLIED ON THE EXPRESS CONDITION THAT IT IS NOT TO BE USED FOR ANY PURPOSE OR COPIED OR COMMUNICATED TO ANY OTHER PERSON WITHOUT WRITTEN PERMISSION FROM EAGLE COPTERS MAINTENANCE LTD.

CHAPTER 98 – WIRE DIAGRAMS (98-00-00)

WIRING IDENTIFICATION CODE

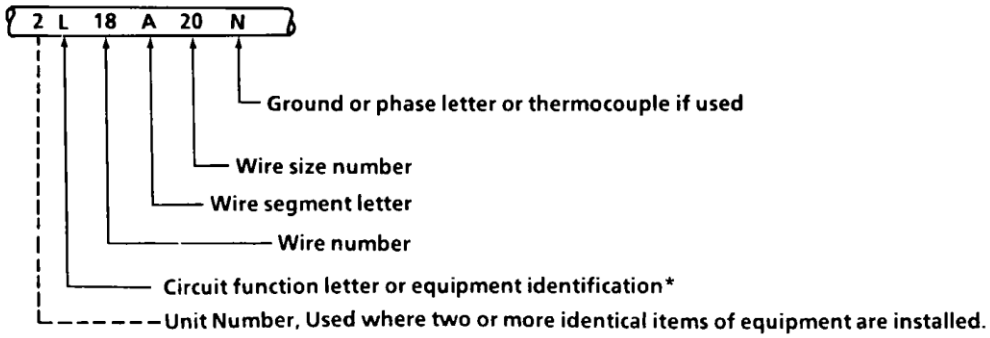

CIRCUIT FUNCTION

CODE	NOMENCLATURE	CODE	NOMENCLATURE
C	Control surfaces	M	Miscellaneous electric
D	Instruments (other than flight or engine)	N	Ground
		P	DC power
E	Engine instruments	Q	Fuel and oil
F	Flight instruments	V	DC power and DC control cables for AC system
G	Landing and flotation gear		
H	Heating, ventilating and de-icing	W	Warning and emergency
J	Ignition	X	AC power
K	Engine Control	CHROM	Chromel
L	Lighting	ALML	Alumel

EQUIPMENT IDENTIFICATION

1AUD	Forward audio system	GTX	ATC Transponder (GTX-330)
2AUD	Aft audio system	LL	Longline/Heli-torch system
1VHF	# 1 VHF communication	OC	Electric Oil Cooler (if installed)
2VHF	# 2 VHF communication	PA	PA system
1TFM	# 1VHF FM communication	PC	Pilot's gyro directional system
2TFM	# 2 VHF FM communication	PH	Pilot's Attitude system
ATC	ATC Transponder (KT76C)	SL	Nav/Comm system (SL30)
CH	Copilot's Attitude system	TB	Pilot's Turn & Bank system
CL	Clocks	VHF	Single VHF communication
ELT	ELT System		

Figure 98-1 - Wiring/Equipment Identification Codes

• COPYRIGHT © 2023 BY EAGLE COPTERS MAINTENANCE LTD. •
THIS DOCUMENT IS PRIVATE AND CONFIDENTIAL AND IS SUPPLIED ON THE EXPRESS CONDITION THAT IT IS NOT TO BE USED FOR ANY PURPOSE OR COPIED OR COMMUNICATED TO ANY OTHER PERSON WITHOUT WRITTEN PERMISSION FROM EAGLE COPTERS MAINTENANCE LTD.

CHAPTER 98 – WIRE DIAGRAMS (98-00-00)

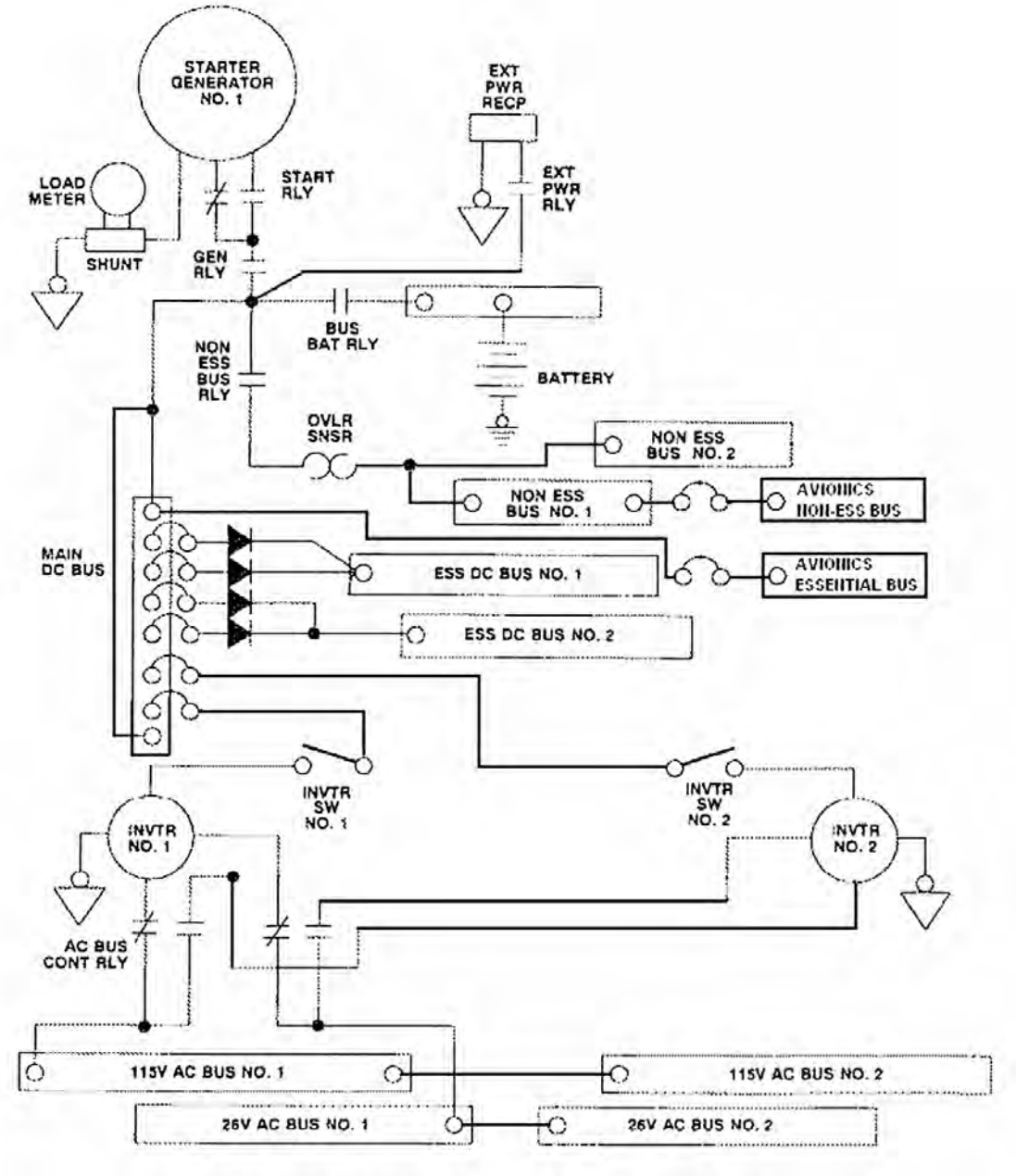

Figure 98-2 - Simplified Electrical Schematic

• COPYRIGHT © 2023 BY EAGLE COPTERS MAINTENANCE LTD. •
THIS DOCUMENT IS PRIVATE AND CONFIDENTIAL AND IS SUPPLIED ON THE EXPRESS CONDITION THAT IT IS NOT TO BE USED FOR ANY PURPOSE OR COPIED OR COMMUNICATED TO ANY OTHER PERSON WITHOUT WRITTEN PERMISSION FROM EAGLE COPTERS MAINTENANCE LTD.

CHAPTER 98 – WIRE DIAGRAMS (98-00-00)

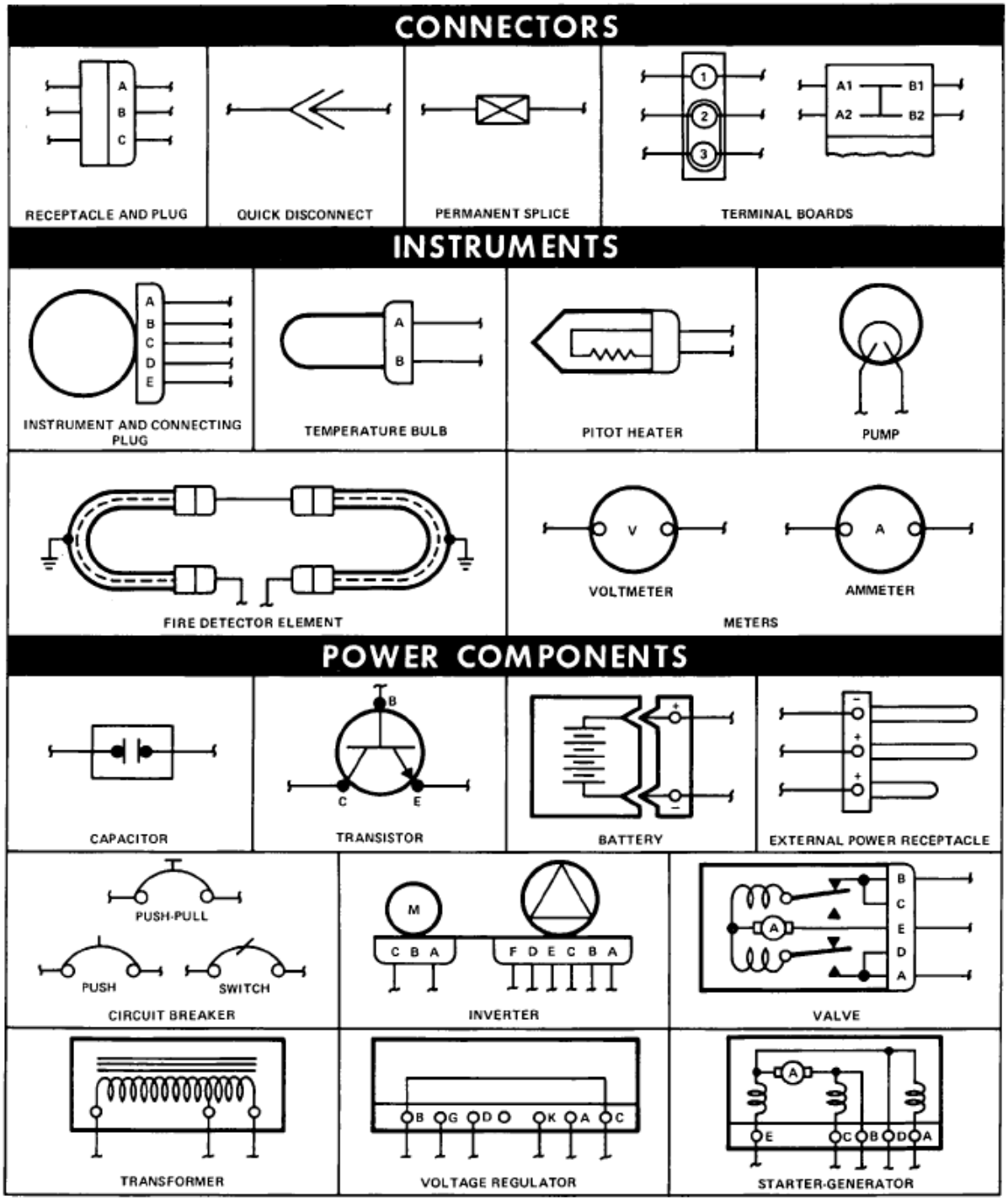

Figure 98-3 - Electrical and Electronics Symbols Chart (Sheet 1 of 3)

• COPYRIGHT © 2023 BY EAGLE COPTERS MAINTENANCE LTD. •
THIS DOCUMENT IS PRIVATE AND CONFIDENTIAL AND IS SUPPLIED ON THE EXPRESS CONDITION THAT IT IS NOT TO BE USED FOR ANY PURPOSE OR COPIED OR COMMUNICATED TO ANY OTHER PERSON WITHOUT WRITTEN PERMISSION FROM EAGLE COPTERS MAINTENANCE LTD.

CHAPTER 98 – WIRE DIAGRAMS (98-00-00)

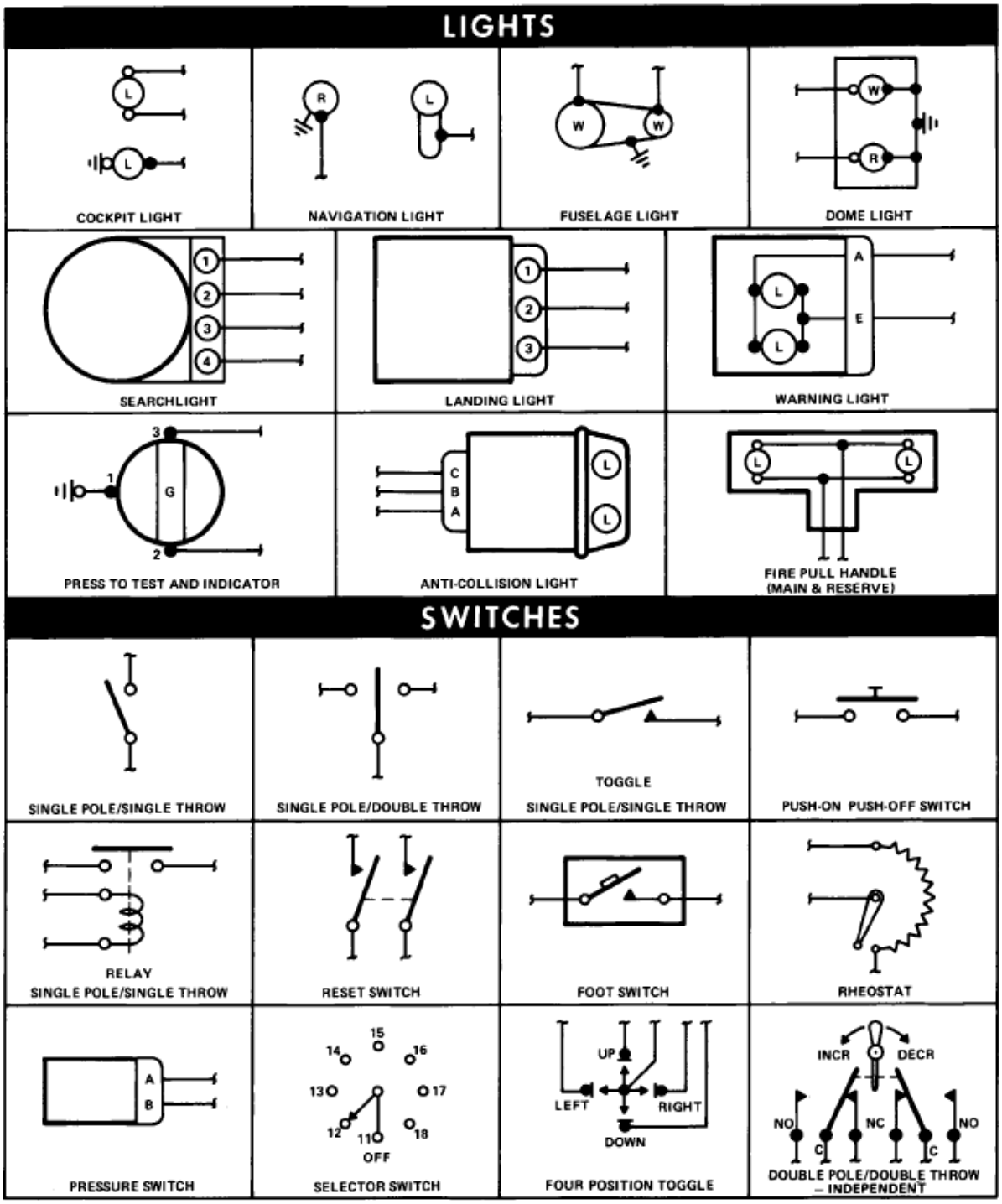

Figure 98-3 - Electrical and Electronics Symbols Chart (Sheet 2 of 3)

• COPYRIGHT © 2023 BY EAGLE COPTERS MAINTENANCE LTD. •
THIS DOCUMENT IS PRIVATE AND CONFIDENTIAL AND IS SUPPLIED ON THE EXPRESS CONDITION THAT IT IS NOT TO BE USED FOR ANY PURPOSE OR COPIED OR COMMUNICATED TO ANY OTHER PERSON WITHOUT WRITTEN PERMISSION FROM EAGLE COPTERS MAINTENANCE LTD.

CHAPTER 98 – WIRE DIAGRAMS (98-00-00)

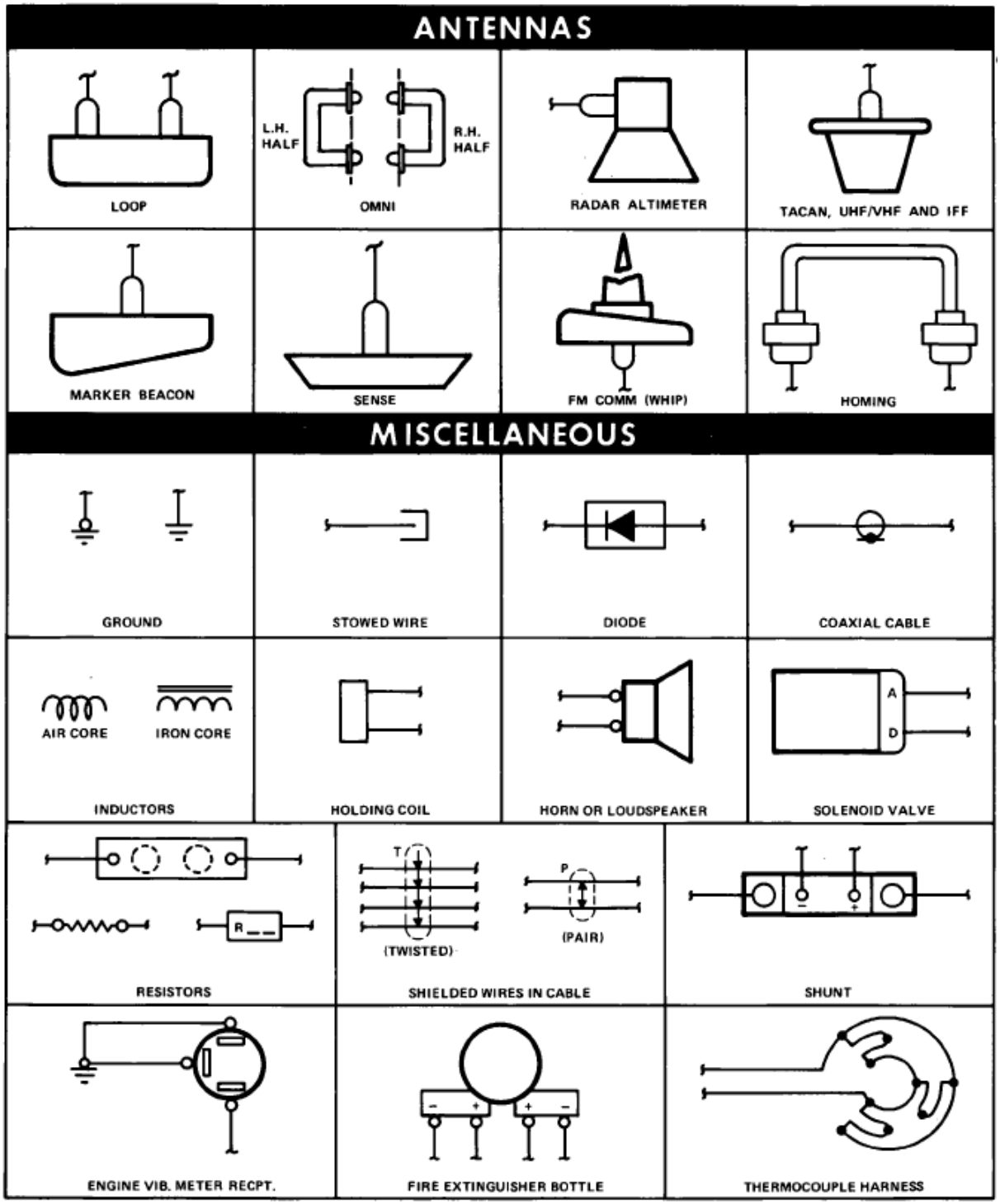

Figure 98-3 - Electrical and Electronics Symbols Chart (Sheet 3 of 3)

• COPYRIGHT © 2023 BY EAGLE COPTERS MAINTENANCE LTD. •
THIS DOCUMENT IS PRIVATE AND CONFIDENTIAL AND IS SUPPLIED ON THE EXPRESS CONDITION THAT IT IS NOT TO BE USED FOR ANY PURPOSE OR COPIED OR COMMUNICATED TO ANY OTHER PERSON WITHOUT WRITTEN PERMISSION FROM EAGLE COPTERS MAINTENANCE LTD.

CHAPTER 98 – WIRE DIAGRAMS (98-00-00)

AC LOAD ANALYSIS

	EQUIPMENT	NUMBER OF UNITS	VA at 115VAC	VA at 26 VAC
INSTRUMENTS				
	Indicator-Transmission Oil Pressure	1	0	2.43
	Transmitter- Transmission Oil Press.	1	0	2.43
		TOTAL	**0**	**4.86**
ENGINE INSTRUMENTS				
	Indicator- Engine Oil Pressure	1	0	2.36
	Transmitter- Engine Oil Pressure	1	0	2.36
	Indicator-Fuel Pressure	1	0	2.50
	Transmitter-Fuel Pressure	1	0	2.50
	Indicator-Torque Pressure	2	4.14	0.00
	Transmitter-Torque Pressure	2	4.14	0.00
	Indicator-Fuel Quantity	1	1	0.00
	Transmitter-Fuel Quantity	3	4.53	0.00
		TOTAL	**13.81**	**9.72**
	TOTAL AC LOAD		**13.81**	**14.58**

Figure 98-4 - AC Load Analysis Chart
For S/Ns 30687, 30817 and 30599

AC LOAD ANALYSIS

	EQUIPMENT	NUMBER OF UNITS	VA at 115VAC	VA at 26 VAC
INSTRUMENTS				
	Indicator-Fuel Quantity	1	1.00	0.00
	Transmitter-Fuel Quatity	3	4.53	0.00
		TOTAL	**5.53**	**0.00**
	TOTAL AC LOAD		**5.53**	**0.00**

Figure 98-5 - AC Load Analysis Chart
For S/Ns except 30687, 30817 and 30599

• COPYRIGHT © 2023 BY EAGLE COPTERS MAINTENANCE LTD. •
THIS DOCUMENT IS PRIVATE AND CONFIDENTIAL AND IS SUPPLIED ON THE EXPRESS CONDITION THAT IT IS NOT TO BE USED FOR ANY PURPOSE OR COPIED OR COMMUNICATED TO ANY OTHER PERSON WITHOUT WRITTEN PERMISSION FROM EAGLE COPTERS MAINTENANCE LTD.

CHAPTER 98 – WIRE DIAGRAMS (98-00-00)

DC LOAD ANALYSIS

	EQUIPMENT	NUMBER OF UNITS	AMPS/UNIT	TOTAL AMPS	NORMAL OPS
LIGHTING					
	Dome Light	3	1.28	3.84	0.00
	Cockpit Light	2	0.18	0.36	0.36
	Instrument Post Lights	9	0.02	0.18	0.18
	Instrument Lighting	19	0.18	3.42	3.42
	Passenger Warning	1	0.18	0.18	0.18
	Master Caution Panel	1	0.2	0.20	0.20
	Annunciators	11	0.04	0.44	
	Search Light	1	16.5	16.50	
	Landing Light	1	16.5	16.50	16.50
	Anti-Collision Lights	2	0.45	0.90	0.90
	Position Lights	6	0.35	2.10	1.40
			TOTAL	**44.62**	**23.14**
POWER					
	Battery Charging	1	0.00	0.00	
	DC Control Panel	1	5.00	5.00	5.00
	Relay-Battery	1	0.6	0.60	0.60
	Relay-Nonessential Bus	1	0.6	0.60	0.60
	Relay-Bus Control	1	0.35	0.35	0.35
	Inverter-Main	1	13.2	13.20	13.20
	Inverter- Spare	1	13.2	13.20	
	Inverter Blower	1	5.00	5.00	
			TOTAL	**37.95**	**19.75**
FUEL AND OIL					
	Pump-Fuel Boost	2	3.25	6.50	6.50
	Valve-Fuel Shutoff	1	2.1	2.10	
	Solenoid-Fuel Control	1	1.25	1.25	1.25
			TOTAL	**9.85**	**7.75**
WARNING					
	Amplifier	1	0.05	0.05	0.05
	Fire Detector No.1	1	0.05	0.05	
	Fire Detector No.2	1	0.05	0.05	
	Fire Detector No.3	1	0.05	0.05	
	Smoke Detector	1	0.05	0.05	0.05
	RPM Limit Warning Box	1	5.00	5.00	5.00
			TOTAL	**5.25**	**5.10**

Figure 98-6 - DC Load Analysis Chart (Sheet 1 of 4)
For S/N 30687, 30817 and 30599

• COPYRIGHT © 2023 BY EAGLE COPTERS MAINTENANCE LTD. •
THIS DOCUMENT IS PRIVATE AND CONFIDENTIAL AND IS SUPPLIED ON THE EXPRESS CONDITION THAT IT IS NOT TO BE USED FOR ANY PURPOSE OR COPIED OR COMMUNICATED TO ANY OTHER PERSON WITHOUT WRITTEN PERMISSION FROM EAGLE COPTERS MAINTENANCE LTD.

CHAPTER 98 – WIRE DIAGRAMS (98-00-00)

DC LOAD ANALYSIS

	EQUIPMENT	NUMBER OF UNITS	AMPS/UNIT	TOTAL AMPS	NORMAL OPS
FLIGHT CONTROLS					
	Magnetic Brake-Force Trim	3	0.4	1.20	1.20
	Solenoid-Hyd. Bypass Valve	2	1.1	2.20	
	Solenoid-Idle Stop Release	1	6.1	6.10	
	Actuator-Governor RPM	1	1	1.00	1.00
			TOTAL	**10.50**	**2.20**
ENGINE INSTRUMENTS					
	Engine Oil Temp	1	0.04	0.04	0.04
	Transmission Oil Temp	1	0.04	0.04	0.04
	Torque	2	0.05	0.10	0.1
	Dual Tach	2	0.05	0.10	0.1
	ITT	1	0.04	0.04	0.04
	Fuel Qty	1	0.04	0.04	0.04
	Fuel Pressure	1	0.04	0.04	0.04
	Volt Meter	2	0.04	0.08	0.08
	Hydraulic Pressure	2	0.04	0.08	0.08
	Gas Producing Tach	1	0.04	0.04	0.04
	Load Meter	1	0.05	0.05	0.05
			TOTAL	**0.65**	**0.65**
FLIGHT INSTRUMENTS					
	Heater-Pitot Tube	2	3.6	7.20	7.20
	Attiude Indicator	2	0.6	1.20	1.20
	Gyro Directional Ind.	1	0.6	0.60	0.60
	Turn & Bank Indicator	1	1	1.00	1.00
	Clock	2	0.4	0.80	0.80
			TOTAL	**10.80**	**10.80**
HEATING					
	Solenoid-Variable Mix Valve	1	0.8	0.80	0.80
	Solenoid- Hot Air De-Icer	1	0.92	0.92	0.92
	Ice Detect/De-ice System	1	15	15.00	10.00
	Solenoid-Doorpost HTR	1	3.1	3.10	3.10
	Vent Blowers	2	1.3	2.60	2.60
			TOTAL	**22.42**	**17.42**

Figure 98-6 - DC Load Analysis Chart (Sheet 2 of 4)
For S/N 30687, 30817 and 30599

• COPYRIGHT © 2023 BY EAGLE COPTERS MAINTENANCE LTD. •
THIS DOCUMENT IS PRIVATE AND CONFIDENTIAL AND IS SUPPLIED ON THE EXPRESS CONDITION THAT IT IS NOT TO BE USED FOR ANY PURPOSE OR COPIED OR COMMUNICATED TO ANY OTHER PERSON WITHOUT WRITTEN PERMISSION FROM EAGLE COPTERS MAINTENANCE LTD.

CHAPTER 98 – WIRE DIAGRAMS (98-00-00)

DC LOAD ANALYSIS

	EQUIPMENT	NUMBER OF UNITS	AMPS/UNIT	TOTAL AMPS	NORMAL OPS
ENGINE IGNITION SYS.					
	Igniter Unit	1	1.5	1.50	1.50
	Solenoid-Valve Igniter	1	0.75	0.75	0.75
	Relay-Starter	1	4.5	4.50	
			TOTAL	**6.75**	**2.25**
MISCELLANEOUS					
	Windshield Wiper	2	3.1	6.20	6.20
	Relay-Cargo Hook	1	0.2	0.20	0.20
	Hourmeter	1	0	0.00	
	Logging Door Lights	3	0.04	0.12	
	Aux Power Connector	1	15	15.00	
			TOTAL	**21.52**	**6.40**
AVIONICS					
	Audio Controller	2	0.5	1.00	1.00
	Transponder	1	3	3.00	3.00
	Blind Encoder	1	2	2.00	2.00
	FM Radio	2	2	4.00	2.00
	VHF AM Radio	2	10	20.00	10.00
	NAV Radio	0	0.35	0.00	
	USFS Panel	1	5	5.00	5.00
	AA34 Interface	1	1	1.00	1.00
	Sackafoam	1	5	5.00	5.00
	PA Controller	1	3	3.00	3.00
	PA Amp	1	5	5.00	5.00
			TOTAL	**49.00**	**37.00**
	TOTAL AMPERES BASIC HELICOPTER			**219.31**	**132.46**

Figure 98-6 - DC Load Analysis Chart (Sheet 3 of 4)
For S/N 30687, 30817 and 30599

• COPYRIGHT © 2023 BY EAGLE COPTERS MAINTENANCE LTD. •
THIS DOCUMENT IS PRIVATE AND CONFIDENTIAL AND IS SUPPLIED ON THE EXPRESS CONDITION THAT IT IS NOT TO BE USED FOR ANY PURPOSE OR COPIED OR COMMUNICATED TO ANY OTHER PERSON WITHOUT WRITTEN PERMISSION FROM EAGLE COPTERS MAINTENANCE LTD.

CHAPTER 98 – WIRE DIAGRAMS (98-00-00)

DC LOAD ANALYSIS

	START & WARM-UP 15 MIN.	TAKEOFF 15 MIN.	CRUISE 15 MIN.	LAND 15 MIN.
TOTAL ALL DC BUSSES	**50.9**	**109.7**	**114.0**	**110.2**
ESSENTIAL DC BUS	**50.9**	**89.4**	**88.4**	**95.0**
NON-ESSENTIAL DC BUS	**0.0**	**20.3**	**25.5**	**15.2**

Figure 98-6 - DC Load Analysis Chart (Sheet 4 of 4)
For S/N 30687, 30817 and 30599

• COPYRIGHT © 2023 BY EAGLE COPTERS MAINTENANCE LTD. •
THIS DOCUMENT IS PRIVATE AND CONFIDENTIAL AND IS SUPPLIED ON THE EXPRESS CONDITION THAT IT IS NOT TO BE USED FOR ANY PURPOSE OR COPIED OR COMMUNICATED TO ANY OTHER PERSON WITHOUT WRITTEN PERMISSION FROM EAGLE COPTERS MAINTENANCE LTD.

CHAPTER 98 – WIRE DIAGRAMS (98-00-00)

DC LOAD ANALYSIS

	EQUIPMENT	NUMBER OF UNITS	AMPS/UNIT	TOTAL AMPS	NORMAL OPS
LIGHTING					
	Dome Light	3	1.28	3.84	0.00
	Cockpit Light	2	0.18	0.36	0.36
	Instrument Post Lights	1	0.02	0.02	0.02
	Instrument Lighting	24	0.18	4.32	4.32
	Passenger Warning	1	0.18	0.18	0.18
	Master Caution Panel	1	0.20	0.20	0.20
	Annunciators	14	0.04	0.56	
	Search Light	1	16.5	16.50	
	Landing Light	1	16.5	16.50	16.50
	Anti-Collision Lights	2	0.45	0.90	0.90
	Position Lights	6	0.35	2.10	2.10
			TOTAL	**45.48**	**24.58**
POWER					
	Battery Charging	1	0.00	0.00	
	DC Control Panel	1	5.00	5.00	5.00
	Relay-Battery	1	0.60	0.60	0.60
	Relay-Nonessential Bus	1	0.20	0.20	0.20
	Inverter-Main	1	13.2	13.20	13.20
	Inverter- Spare	1	13.2	13.20	
			TOTAL	**32.20**	**19.00**
FUEL AND OIL					
	Pump-Fuel Boost	2	3.25	6.50	6.50
	Valve-Fuel Shutoff	1	2.10	2.10	
	Solenoid-Fuel Control	1	1.25	1.25	1.25
			TOTAL	**9.85**	**7.75**
WARNING					
	Amplifier	1	0.05	0.05	0.05
	Fire Detector No.1	1	0.05	0.05	
	Fire Detector No.2	1	0.05	0.05	
	Fire Detector No.3	1	0.05	0.05	
	Smoke Detector	1	0.05	0.05	0.05
	RPM Limit Warning Box	1	5.00	5.00	5.00
			TOTAL	**5.25**	**5.10**

Figure 98-7 - DC Load Analysis Chart (Sheet 1 of 4)
For S/N except 30687, 30817 and 30599

• COPYRIGHT © 2023 BY EAGLE COPTERS MAINTENANCE LTD. •
THIS DOCUMENT IS PRIVATE AND CONFIDENTIAL AND IS SUPPLIED ON THE EXPRESS CONDITION THAT IT IS NOT TO BE USED FOR ANY PURPOSE OR COPIED OR COMMUNICATED TO ANY OTHER PERSON WITHOUT WRITTEN PERMISSION FROM EAGLE COPTERS MAINTENANCE LTD.

CHAPTER 98 – WIRE DIAGRAMS (98-00-00)

DC LOAD ANALYSIS

	EQUIPMENT	NUMBER OF UNITS	AMPS/ UNIT	TOTAL AMPS	NORMAL OPS
FLIGHT CONTROLS					
	Magnetic Brake-Force Trim	3	0.40	1.20	1.20
	Solenoid-Hyd. Bypass Valve	2	1.10	2.20	
	Solenoid-Idle Stop Release	1	6.10	6.10	
	Actuator-Governor RPM	1	1.00	1.00	1.00
			TOTAL	**10.50**	**2.20**
ENGINE INSTRUMENTS					
	Engine Oil Temp/Press	1	0.38	0.38	0.38
	Transmission Oil Temp/Press	1	0.38	0.38	0.38
	Torque	2	0.16	0.32	0.32
	Dual Tach	2	0.17	0.34	0.34
	EGT/MGT	1	0.16	0.16	0.16
	Fuel Pressure	1	0.07	0.07	0.07
	Volt Meter/Loadmeter	1	0.07	0.07	0.07
	Hydraulic Oil Temp/Press	2	0.38	0.76	0.76
	Gas Producing Tach	1	0.16	0.16	0.16
			TOTAL	**2.64**	**2.64**
FLIGHT INSTRUMENTS					
	Heater-Pitot Tube	2	3.60	7.20	7.20
	Attitude Indicator	2	0.60	1.20	1.20
	Gyro Directional Ind.	1	0.60	0.60	0.60
	Turn & Bank Indicator	1	1.00	1.00	1.00
	Clock	2	0.40	0.80	0.80
			TOTAL	**10.80**	**10.80**
HEATING					
	Solenoid-Variable Mix Valve	1	0.80	0.80	0.80
	Solenoid- Hot Air De-Icer	1	0.92	0.92	0.92
	De-ice System	1	10.00	10.00	10.00
	Solenoid-Doorpost HTR	1	3.10	3.10	3.10
	Vent Blowers	2	1.30	2.60	2.60
			TOTAL	**22.42**	**17.42**

Figure 98-7 - DC Load Analysis Chart (Sheet 2 of 4)
For S/N except 30687, 30817 and 30599

• COPYRIGHT © 2023 BY EAGLE COPTERS MAINTENANCE LTD. •
THIS DOCUMENT IS PRIVATE AND CONFIDENTIAL AND IS SUPPLIED ON THE EXPRESS CONDITION THAT IT IS NOT TO BE USED FOR ANY PURPOSE OR COPIED OR COMMUNICATED TO ANY OTHER PERSON WITHOUT WRITTEN PERMISSION FROM EAGLE COPTERS MAINTENANCE LTD.

CHAPTER 98 – WIRE DIAGRAMS (98-00-00)

DC LOAD ANALYSIS

	EQUIPMENT	NUMBER OF UNITS	AMPS/UNIT	TOTAL AMPS	NORMAL OPS
ENGINE IGNITION SYS.					
	Igniter Unit	1	1.50	1.50	1.50
	Solenoid-Valve Igniter	1	0.75	0.75	0.75
	Relay-Starter	1	4.50	4.50	
			TOTAL	**6.75**	**2.25**
MISCELLANEOUS					
	Windshield Wiper	2	3.10	6.20	6.20
	Relay-Cargo Hook	1	0.20	0.20	0.20
	Hourmeter	1	0.00	0.00	
	Logging Door Lights	3	0.04	0.12	
	Aux Power Connector	1	15.00	15.00	
			TOTAL	**21.52**	**6.40**
AVIONICS					
	Audio Controller	2	0.50	1.00	1.00
	Transponder	1	3.00	3.00	3.00
	Blind Encoder	1	2.00	2.00	2.00
	GNS-430 GPS	1	3.00	3.00	3.00
	GNS-430 VHF Comm	1	5.00	5.00	5.00
	#2 VHF Comm	1	10.00	10.00	10.00
	FM Radio	2	2.00	4.00	1.00
	USFS Panel	1	5.00	5.00	1.00
	AA34 Interface	1	1.00	1.00	0.50
	Sackafoam	1	5.00	5.00	
	PA Controller	1	3.00	3.00	3.00
	PA Amp	1	5.00	5.00	5.00
			TOTAL	**47.00**	**25.50**
	TOTAL AMPERES BASIC HELICOPTER			**214.41**	**123.64**

Figure 98-7 - DC Load Analysis Chart (Sheet 3 of 4)
For S/N except 30687, 30817 and 30599

• COPYRIGHT © 2023 BY EAGLE COPTERS MAINTENANCE LTD. •
THIS DOCUMENT IS PRIVATE AND CONFIDENTIAL AND IS SUPPLIED ON THE EXPRESS CONDITION THAT IT IS NOT TO BE USED FOR ANY PURPOSE OR COPIED OR COMMUNICATED TO ANY OTHER PERSON WITHOUT WRITTEN PERMISSION FROM EAGLE COPTERS MAINTENANCE LTD.

CHAPTER 98 – WIRE DIAGRAMS (98-00-00)

DC LOAD ANALYSIS

	START & WARM-UP 15 MIN.	TAKEOFF 15 MIN.	CRUISE 15 MIN.	LAND 15 MIN.
TOTAL ALL DC BUSSES	**50.9**	**109.7**	**114.0**	**110.2**
ESSENTIAL DC BUS	**50.9**	**89.4**	**88.4**	**95.0**
NON-ESSENTIAL DC BUS	**0.0**	**20.3**	**25.5**	**15.2**

Figure 98-7 - DC Load Analysis Chart (Sheet 4 of 4)
For S/N except 30687, 30817 and 30599

• COPYRIGHT © 2023 BY EAGLE COPTERS MAINTENANCE LTD. •
THIS DOCUMENT IS PRIVATE AND CONFIDENTIAL AND IS SUPPLIED ON THE EXPRESS CONDITION THAT IT IS NOT TO BE USED FOR ANY PURPOSE OR COPIED OR COMMUNICATED TO ANY OTHER PERSON WITHOUT WRITTEN PERMISSION FROM EAGLE COPTERS MAINTENANCE LTD.

CHAPTER 98
WIRE DIAGRAMS
(98-00-00)

Appendix A

Appendix A contains Drawings D212-725-2 and D212-725-2-G2 wiring Diagrams as well as Technical Bulletin (TB) and aircraft specific avionics wiring diagrams.

Please visit https://www.eaglecopters.com/downloads to get the latest approved revisions, or contact customersupport@eaglecopters.com

• COPYRIGHT © 2023 BY EAGLE COPTERS MAINTENANCE LTD. •
THIS DOCUMENT IS PRIVATE AND CONFIDENTIAL AND IS SUPPLIED ON THE EXPRESS CONDITION THAT IT IS NOT TO BE USED FOR ANY PURPOSE OR COPIED OR COMMUNICATED TO ANY OTHER PERSON WITHOUT WRITTEN PERMISSION FROM EAGLE COPTERS MAINTENANCE LTD.

WIRING DIAGRAM REVISIONS LIST

WIRING DIAGRAM NUMBER BHT-212-MM	WIRING DIAGRAM NUMBER D212-725-2	PAGE #	REV	DATE	NOTES
N/A	N/A	I	F	20.03.20	-Wiring diagram revisions list page 1
N/A	N/A	II	F	20.03.20	-Wiring diagram revisions list page 2
N/A	N/A	III	F	20.03.20	-Wiring diagram revisions list page 3
N/A	N/A	IV	F	20.03.20	-Wiring diagram revisions list page 4
N/A	N/A	V	F	20.03.20	-Wiring diagram revisions list page 5
N/A	N/A	VI	F	20.03.20	-Wiring diagram revisions list page 6
N/A	N/A	VII	F	20.03.20	-Wiring diagram revisions list page 7
N/A	N/A	VIII	F	20.03.20	-Wiring diagram revisions list page 8
N/A	N/A	IX	F	20.03.20	-Wiring diagram revisions list page 9
N/A	N/A	X	F	20.03.20	-Wiring diagram revisions list page 10
N/A	N/A	XI	F	20.03.20	-Wiring diagram revisions list page 11
98-10	98-10S	1	A	06.12.08	-M13, Dual Ammeter removed and single loadmeter installed from B205. -Removed diodes CR63 through CR66 due Non-Ess. Bus fed from Main DC Bus. -TB52 removed. -#2 28VDC Bus wiring added due no #2 Generator System. -Avionics busses added to allow for Avionics Master Switches. -TB901 and TB902 installed to accommodate feeder wires into each CB Panel.
			B	07.01.30	-Wiring rerouted to allow for correct T5 operation.
			C	07.05.01	-Wiring removed for # 2 dual voltmeter. M21, indicator removed & #1 Dual -Voltmeter moved to the #2 position.

ECN 20 - 105

2020.04.20

DESIGN	RD	**DART AEROSPACE LTD** HAWKESBURY, ONTARIO, CANADA
DRAWN	WK	
CHECKED	KB	DRAWING NO. REV. F
MFG. APPR.	LJ	D212-725-2 SHEET I OF XI
APPROVED	KB	TITLE SCALE
DE APPR.	KB	**WIRING DIAGRAMS** NTS
DATE	20.03.20	

COPYRIGHT © 2006 BY DART AEROSPACE LTD
THIS DOCUMENT IS PRIVATE AND CONFIDENTIAL AND IS SUPPLIED ON THE EXPRESS CONDITION THAT IT IS NOT TO BE USED FOR ANY PURPOSE OR COPIED OR COMMUNICATED TO ANY OTHER PERSON WITHOUT WRITTEN PERMISSION FROM DART AEROSPACE LTD.

WIRING DIAGRAM NUMBER BHT-212-MM	WIRING DIAGRAM NUMBER D212-725-2	PAGE #	REV	DATE	NOTES
98-11	98-11S	2	A	06.12.08	-#2 Generator System wiring diagram deleted and replaced with AC & DC power feeder schematic.
			B	07.01.30	-Re-issue of all diagrams.
98-12	98-12S	3	A	06.12.08	-All wiring for # 2 Battery System removed.
			B	07.01.30	-Re-issue of all diagrams.
			C	07.05.01	-Added Master Caution wires to Battery Relay for clarity.
98-13	98-13S	4	A	06.12.08	-#3 Inverter, #3 Inverter switch, #3 AC sense relay, and #2 AC Bus Control Relay removed from system. -Auto switching function for # 2 inverter if # 1 inverter fails. -Both inverters powered from Main DC Bus.
			B	07.01.30	-Re-issue of all diagrams.
98-14	98-14S	5	A	06.12.08	-All #2 engine start components removed. -Engine dual start switch replaced with single engine start switch.
			B	07.01.30	-Start Fuel Solenoid Valve, switch, and wiring installed per STC.
			C	07.05.01	-Added 'Start Signal' wire for Analog/Digital gauge.
98-15	98-15S	6	A	06.12.08	-#2 Idle Stop system removed in addition to the #1 Idle Stop delay relay and dual position Idle Stop switch. -Single position Idle Stop switch installed.
			B	07.01.30	-Re-issue of all diagrams.
98-16	N/A	N/A	N/A	N/A	-Particle Separator system removed and wiring diagram deleted.
98-17	98-17S	7	A	06.12.08	-Inputs and outputs for #2 RPM Warning system removed.
			B	07.01.30	-Re-issue of all diagrams.
			C	07.05.01	-Correction of wiring for RPM Limit Warning box from Gas Prod Tach.
98-18	98-18S	8	A	06.12.08	-Wiring routed thru CB panel disconnects.
			B	07.01.30	-Re-issue of all diagrams.
			C	07.05.01	-Correction to Gov RPM Actuator.

ECN 20-105
2020.04.20

DESIGN	RD
DRAWN	WK
CHECKED	KB
MFG. APPR.	LJ
APPROVED	KB
DE APPR.	KB
DATE	20.03.20

DART AEROSPACE LTD
HAWKESBURY, ONTARIO, CANADA

DRAWING NO. D212-725-2 REV. F
SHEET II OF XI
TITLE **WIRING DIAGRAMS** SCALE NTS

COPYRIGHT © 2006 BY DART AEROSPACE LTD
THIS DOCUMENT IS PRIVATE AND CONFIDENTIAL AND IS SUPPLIED ON THE EXPRESS CONDITION THAT IT IS NOT TO BE USED FOR ANY PURPOSE OR COPIED OR COMMUNICATED TO ANY OTHER PERSON WITHOUT WRITTEN PERMISSION FROM DART AEROSPACE LTD.

WIRING DIAGRAM NUMBER BHT-212-MM	WIRING DIAGRAM NUMBER D212-725-2	PAGE #	REV	DATE	NOTES
98-19	98-19S	9	A	06.12.08	-#2 Fire Bottle wiring removed. -Single Pole "Discharge" switch to be used.
			B	07.01.30	-Re-issue of all diagrams.
98-20	98-20S	10	A	06.12.08	-B212 Fire Detection system removed and B205 type system installed. -Single "Fire Handle" to be used. -Rotary "Test Switch" replaced by 3 "Press to Test" buttons, one for each detector.
			B	07.01.30	-Re-issue of all diagrams.
			C	07.05.01	-Correction to wire numbers at #1 detector.
98-21	98-21S	11	A	06.12.08	-Engine # 2 and Combining Gearbox systems wiring removed.
			B	07.01.30	-Re-issue of all diagrams.
			C	07.05.01	-Corrector to wire number at J41.
98-22	98-22S	12	A	06.12.08	-Engine # 2 Tach systems wiring removed. -Triple Tach Indicator to be replaced by B205 Dual Tach Indicator.
			B	07.01.30	-Re-issue of all diagrams.
			C	07.05.01	-Correction of wiring for RPM Limit Warning box from Gas Prod Tach.
98-23	98-23S	13	A	06.12.08	-Engine # 2 ITT system wiring removed. -#1 System to be used for EGT/MGT.
			B	07.01.30	-Re-issue of all diagrams.
			C	07.05.01	-Terminology change from ITT to MGT/EGT. -Correction of wire number in CB panel. -Drawing changed due to new Analog/Digital indicator.
98-24	98-24S	14	A	06.12.08	-Engine # 2 Torque Pressure System wiring removed.
			B	07.01.30	-Re-issue of all diagrams.
			C	07.05.01	-Correction of wire numbers to J99 & correction of connector # P64.
98-25	98-25S	15	A	06.12.08	-Wiring routed thru CB panel disconnects.
			B	07.01.30	-Re-issue of all diagrams.

ECN 20-105
2020.04.20

DESIGN	RD
DRAWN	WK
CHECKED	KB
MFG. APPR.	LJ
APPROVED	KB
DE APPR.	~~KB~~
DATE	20.03.20

DART AEROSPACE LTD
HAWKESBURY, ONTARIO, CANADA

DRAWING NO. D212-725-2 REV. F
SHEET III OF XI
TITLE **WIRING DIAGRAMS** SCALE NTS

COPYRIGHT © 2006 BY DART AEROSPACE LTD
THIS DOCUMENT IS PRIVATE AND CONFIDENTIAL AND IS SUPPLIED ON THE EXPRESS CONDITION THAT IT IS NOT TO BE USED FOR ANY PURPOSE OR COPIED OR COMMUNICATED TO ANY OTHER PERSON WITHOUT WRITTEN PERMISSION FROM DART AEROSPACE LTD.

WIRING DIAGRAM NUMBER BHT-212-MM	WIRING DIAGRAM NUMBER D212-725-2	PAGE #	REV	DATE	NOTES
98-26	98-26S	16	A	06.12.08	-Hourmeter now activated by Engine Torque Pressure Switch instead of C Box Oil Pressure Switch.
			B	07.01.30	-Re-issue of all diagrams.
			C	07.05.01	-Correction of torque pressure switch name and connector number.
98-27	98-27S	17	A	06.12.08	-Engine # 2 Fuel Pressure system wiring removed.
			B	07.01.30	-Re-issue of all diagrams.
98-28	98-28S	18	A	06.12.08	-New wiring diagram for pilots and copilots ADI's.
			B	07.01.30	-Re-issue of all diagrams.
98-29	98-29S	19	A	06.12.08	-New wiring diagram for pilots Turn & Bank and Gyro Directional Indicator.
			B	07.01.30	-Re-issue of all diagrams.
98-30	98-30S	20	A	06.12.08	-Fuel Control Heater and Fuel Control Manual Solenoid wiring removed and Fuel Control Solenoid Valve wiring installed for B205 engine. -Engine Governor switch wiring inside Engine Control Panel modified to operate Valve.
			B	07.01.30	-Fuel Interconnect valves wired to allow for Master Caution annunciation. -Start Fuel Solenoid Valve, switch, and wiring installed per STC.
			C	07.05.01	-Fuel Valve wiring modified to remove it from Fire Handle. -Fuel Interconnect Switch removed and wiring removed from Valves. Wiring added to keep Master Caution lights out.
98-31	98-31S	21	A	06.12.08	-Fuel Control Heater and Fuel Control Manual Solenoid wiring removed. -Engine #2 Governor switch removed from Engine Control Panel.
			B	07.01.30	-Re-issue of all diagrams.

ECN 20-105
2020-04-20

DESIGN	RD	**DART AEROSPACE LTD** HAWKESBURY, ONTARIO, CANADA
DRAWN	WK	
CHECKED	KB	DRAWING NO. D212-725-2 REV. F
MFG. APPR.	LJ	SHEET IV OF XI
APPROVED	KB	TITLE **WIRING DIAGRAMS** SCALE NTS
DE APPR.	KB	
DATE	20.03.20	

COPYRIGHT © 2006 BY DART AEROSPACE LTD
THIS DOCUMENT IS PRIVATE AND CONFIDENTIAL AND IS SUPPLIED ON THE EXPRESS CONDITION THAT IT IS NOT TO BE USED FOR ANY PURPOSE OR COPIED OR COMMUNICATED TO ANY OTHER PERSON WITHOUT WRITTEN PERMISSION FROM DART AEROSPACE LTD.

98-32	98-32S	22	A	06.12.08	-Fuel Crossfeed System removed and WD replaced by Engine Control Panel/WD.
			B	07.01.30	-Start Fuel Switch and Fuel Interconnect Master Caution wiring installed.
			C	07.05.01	-Jumper wires added for Fuel Boost Master Caution lights. -Fuel Interconnect Switch removed and wiring removed from Valves. Wiring added to keep Master Caution lights out.
98-33	98-33S	23	A	06.12.08	-Wiring routed thru CB panel disconnects.
			B	07.01.30	-Re-issue of all diagrams.
			C	07.05.01	-No Change
			D	07.12.04	-Removal of Fuel Quantity Select Switch & modification of wiring to accommodate same. -Applicable to ALL EXCEPT S/N's 30687, 30931, & 30576.
98-34	98-34S	24	A	06.12.08	-VSI, Triple Tach, Altimeter, Airspeed Indicator, Attitude Indicator, and Dual Torque Indicator Lighting wiring removed. -Passenger Warning Light power and control added to diagram 98-35S. -LED Post lights installed for Dual Tach and Torque Pressure Indicators. -Power Supply removed due lighting now 28 VDC.
			B	07.01.30	-Wiring modified due LED post lights too bright. Resistor added to 27TB1. -OAT Indicator pot light added.
			C	07.05.01	-LED post lights removed and replaced with incandescent post lights.

ECN 20-105
2020.04.20

DESIGN	RD
DRAWN	WK
CHECKED	KB
MFG. APPR.	LJ
APPROVED	KB
DE APPR.	KB
DATE	20.03.20

DART AEROSPACE LTD
HAWKESBURY, ONTARIO, CANADA

DRAWING NO. D212-725-2 REV. F
SHEET V OF XI
TITLE **WIRING DIAGRAMS** SCALE NTS

COPYRIGHT © 2006 BY DART AEROSPACE LTD
THIS DOCUMENT IS PRIVATE AND CONFIDENTIAL AND IS SUPPLIED ON THE EXPRESS CONDITION THAT IT IS NOT TO BE USED FOR ANY PURPOSE OR COPIED OR COMMUNICATED TO ANY OTHER PERSON WITHOUT WRITTEN PERMISSION FROM DART AEROSPACE LTD.

98-35	98-35S	25	A	06.12.08	-VSI, Triple Tach, Altimeter, Airspeed Indicator, Attitude Indicator, Standby Compass and Dual Torque indicator lighting wiring removed. -Passenger Warning Light system removed from this drawing and added to diagram 98-34S. -Nav Command Light relay and wiring removed. -LED Post lights installed for Dual Tach and Torque Pressure Indicators. -Power Supply removed due lighting now 28 VDC.
			B	07.01.30	-Wiring modified due LED post lights too bright. Resistor added to 27TB1.
			C	07.05.01	-LED post lights removed and replaced with incandescent post lights and correction of pin numbers on 27TB1.
98-36	98-36S	26	A	06.12.08	-Engine #2 Instrument Lighting wiring removed because instruments removed. -Combining Gearbox Ind & Integrally lit panel wiring removed.
			B	07.01.30	-Engine instruments converted to 28VDC lighting. Power Supplies removed and wiring changed to accommodate changes.
			C	07.05.01	-LED Post lights installed for Fuel Quantity Select Switch and for upper panel illumination. -M21, #2 Dual Voltmeter wiring removed as indicator removed.
98-37	98-37S	27	A	06.12.08	-Engine # 2 "ENG OUT" light and wiring removed. -New annunciators installed and wiring amend to accommodate them. -Annunciators renamed to Engine RPM (red) and Rotor RPM (amber).
			B	07.01.30	-TB50 & TB51 combined into TB50. -Heater ON/OFF light added to dimming circuit.
			C	07.05.01	-Wiring modified for RPM lights to allow for dimming of lights.(routed to TB50) -Correction make to 27TB1 hookup for Master Caution Lights.

ECN 20-105
2020.04.20

DESIGN	RD
DRAWN	WK
CHECKED	KB
MFG. APPR.	LJ
APPROVED	KB
DE APPR.	KB
DATE	20.03.20

DART AEROSPACE LTD
HAWKESBURY, ONTARIO, CANADA

DRAWING NO. D212-725-2 REV. F
SHEET VI OF XI
TITLE **WIRING DIAGRAMS** SCALE NTS

COPYRIGHT © 2006 BY DART AEROSPACE LTD
THIS DOCUMENT IS PRIVATE AND CONFIDENTIAL AND IS SUPPLIED ON THE EXPRESS CONDITION THAT IT IS NOT TO BE USED FOR ANY PURPOSE OR COPIED OR COMMUNICATED TO ANY OTHER PERSON WITHOUT WRITTEN PERMISSION FROM DART AEROSPACE LTD.

98-38 Sheet 1	**98-38S Sheet 1**	**28**	**A**	**06.12.08**	-All Engine # 2 wiring removed. -Electric Oil Cooler wiring added to diagram for M/C annunciations (if used).
			B	**07.01.30**	-Fuel Interconnect valve lights added to allow for monitoring of valve position.
			C	**07.05.01**	-Wiring change for Fuel Boost Master Caution lighting inside Engine Control Panel. -Fuel Interconnect Switch removed and wiring removed from Valves. Wiring added to keep Master Caution lights out.
98-38 Sheet 2	**98-38S Sheet 2**	**29**	**A**	**06.12.08**	-C Box wiring & AC Voltage Sensing wiring removed. -#1 and #2 Hydraulic wiring split to allow for separate Master Caution annunciations. -Heater Air Line and Heater Overheat wiring split to allow for separate Master Caution annunciations.
			B	**07.01.30**	-Re-issue of all diagrams.
			C	**07.05.01**	-Correction to positions for 27TB1.
98-38 Sheet 3	**98-38S Sheet 3**	**30**	**A**	**06.12.08**	-Particle Separator wiring removed. -Fuel Control Manual Solenoid wiring removed and Fuel Control Solenoid Valve wiring installed for T5317A engine. -Engine Governor Switch wiring inside Engine Control Panel modified to operate Valve.
			B	**07.01.30**	-Re-issue of all diagrams.
			C	**07.05.01**	-Correction made to Master Caution Buss identification. -Correction made to wire numbers for governor switch.
98-38 Sheet 4	**98-38S Sheet 4**	**31**	**A**	**06.12.08**	-C Box Chip Detector wiring removed. -42 and 90 GB Chip Detector wiring split to allow for separate Master Caution annunciations. -Wiring provisions added for Transmission Chip Detector 'Latched Indicators'.
			B	**07.01.30**	-Re-issue of all diagrams.

ECN 20-105
2020.04.20

DESIGN	RD
DRAWN	WK
CHECKED	KB
MFG. APPR.	LJ
APPROVED	KB
DE APPR.	~~KB~~
DATE	20.03.20

DART AEROSPACE LTD
HAWKESBURY, ONTARIO, CANADA

DRAWING NO. D212-725-2 REV. F
SHEET VII OF XI

TITLE **WIRING DIAGRAMS** SCALE NTS

COPYRIGHT © 2006 BY DART AEROSPACE LTD
THIS DOCUMENT IS PRIVATE AND CONFIDENTIAL AND IS SUPPLIED ON THE EXPRESS CONDITION THAT IT IS NOT TO BE USED FOR ANY PURPOSE OR COPIED OR COMMUNICATED TO ANY OTHER PERSON WITHOUT WRITTEN PERMISSION FROM DART AEROSPACE LTD

98-38 Sheet 5	98-38S Sheet 5	32	A	06.12.08	-Battery Bus #2 and Battery Temp Wiring removed. -Passenger and Cargo Door Lock wiring split to allow for separate Master Caution annunciations.
			B	07.01.30	-ENG ICING & ENG ICE DET wires moved to new locations in connectors.
			C	07.05.01	-Change of terminology from Baggage to Cargo Door.
			E	17.11.17	-Alternate circuit breaker wiring for new MCP.
			F	20.03.20	-New MCP part number.
98-39	98-39S	33	A	06.12.08	-Transistor Stack-up diagram added for reference and convenience. -Wiring routed thru CB panel disconnects.
			B	07.01.30	-Re-issue of all diagrams.
98-40	98-40S	34	A	06.12.08	-Transistor Stack-up diagram added for reference and convenience. -Wiring routed thru CB panel disconnects.
			B	07.01.30	-Re-issue of all diagrams
98-41	98-41S	35	A	06.12.08	-Transistor Stack-up diagram added for reference and convenience. -Wiring routed thru CB panel disconnects.
			B	07.01.30	-Re-issue of all diagrams.
98-42	98-42S	36	A	06.12.08	-Wiring routed thru CB panel disconnects.
			B	07.01.30	-Re-issue of all diagrams.
98-43	98-43S	37	A	06.12.08	-Wiring routed thru CB panel disconnects.
			B	07.01.30	-Re-issue of all diagrams.
98-44	98-44S	38	A	06.12.08	-Wiring routed thru CB panel disconnects.
			B	07.01.30	-Re-issue of all diagrams.
98-45	98-45S	39	A	06.12.08	-Upper Anti-collision wiring routed thru J97A/P97A connector due J99/P99 moved to J95 position. -New LED Anti-collision Lights installed.
			B	07.01.30	-New Switch installed to allow operation of upper beacon only in certain circumstances.
98-46	98-46S	40	A	06.12.08	-Wiring routed thru CB panel disconnects. -New LED Red, Green and White Position Lights installed.
			B	07.01.30	-Re-issue of all diagrams.

ECN 20-105
2020.04.20

DESIGN	RD
DRAWN	WK
CHECKED	KB
MFG. APPR.	LJ
APPROVED	KB
DE APPR.	KB
DATE	20.03.20

DART AEROSPACE LTD
HAWKESBURY, ONTARIO, CANADA

DRAWING NO. D212-725-2 REV. F
SHEET VIII OF XI

TITLE **WIRING DIAGRAMS** SCALE NTS

COPYRIGHT © 2006 BY DART AEROSPACE LTD
THIS DOCUMENT IS PRIVATE AND CONFIDENTIAL AND IS SUPPLIED ON THE EXPRESS CONDITION THAT IT IS NOT TO BE USED FOR ANY PURPOSE OR COPIED OR COMMUNICATED TO ANY OTHER PERSON WITHOUT WRITTEN PERMISSION FROM DART AEROSPACE LTD.

98-47	98-47S	41	A	06.12.08	-Wiring routed thru CB panel disconnects.
			B	07.01.30	-Re-issue of all diagrams.
98-48	98-48S	42	A	06.12.08	-Wiring routed thru CB panel disconnects.
			B	07.01.30	-Re-issue of all diagrams.
			C	07.05.01	-Terminology changed from Baggage to Cargo
98-49	98-49S	43	A	06.12.08	-Hydraulic Systems # 1 and # 2 wiring split for Master Caution Annunciation prior to P58. -Wiring added from J58 to P43 on Master Caution Panel for above.
			B	07.01.30	-Re-issue of all diagrams.
			C	07.05.01	-Correction to wiring in Miscellaneous Control Panel.
98-54	98-54S	44	A	06.12.08	-AFCS switches and Attitude Box wiring removed. No AFCS system installed.
			B	07.01.30	-Re-issue of all diagrams.
			C	07.05.01	-Addition of Dual Controls switch per STC C-LSH00-716/D.
98-55	98-55S	45	A	06.12.08	-Wiring changed to accommodate new LED annunciators. No other changes.
			B	07.01.30	-Re-issue of all diagrams.
			C	07.05.01	-Terminology changed from Baggage to Cargo. -Adapter harness drawing added.
98-56	98-56S	46	A	06.12.08	-Wiring routed thru CB panel disconnects. -Static Port Heater not installed. Wiring capped and stowed.
			B	07.01.30	-Re-issue of all diagrams.
98-57	98-57S	47	A	06.12.08	-Wiring routed thru CB panel disconnects.
			B	07.01.30	-Re-issue of all diagrams.
98-58	N/A	N/A	N/A	N/A	-Wiring diagram deleted.
98-59	98-59S	48	A	06.12.08	-Wiring changed to accommodate new LED annunciators. No other changes made.
			B	07.01.30	-Re-issue of all diagrams.
			C	07.05.01	-CR129 removed from system as not required. -'2 Button' Cargo release drawing added.

ECN 20-105
2020.04.20

DESIGN	RD
DRAWN	WK
CHECKED	KB
MFG. APPR.	LJ
APPROVED	KB
DE APPR.	KB
DATE	20.03.20

DART AEROSPACE LTD
HAWKESBURY, ONTARIO, CANADA

DRAWING NO. D212-725-2 REV. F
SHEET IX OF XI
TITLE **WIRING DIAGRAMS** SCALE NTS

COPYRIGHT © 2006 BY DART AEROSPACE LTD
THIS DOCUMENT IS PRIVATE AND CONFIDENTIAL AND IS SUPPLIED ON THE EXPRESS CONDITION THAT IT IS NOT TO BE USED FOR ANY PURPOSE OR COPIED OR COMMUNICATED TO ANY OTHER PERSON WITHOUT WRITTEN PERMISSION FROM DART AEROSPACE LTD.

98-60	98-60S	49	A	06.12.08	-Particle separator wiring and components removed. -Air conditioning wiring and components removed. -Bleed valve wiring and components removed. -Wiring modified to allow for separate Master Caution annunciations for Heater Air Line and Heater Overheat. -Wiring for Winterization Control Valve, Heater Control Line, and Aft Outlet Valve installed. Valves not installed.
			B	07.01.30	-Engine Fire Handle and Bleed Air Priority switch added to wiring to shut down heater per B205 system. -Heater ON/OFF annunciator added.
			C	07.05.01	-Wiring corrected at Bleed Air Priority Switch.
98-61	98-61S	50	A	06.12.08	-Wiring routed thru CB panel disconnects.
			B	07.01.30	-Re-issue of all diagrams.
98-62	98-62S	51	A	06.12.08	-New diagram added for Pilot Collective Stick wiring diagram.
			B	07.01.30	-Re-issue of all diagrams.
			C	07.05.01	-Correction of wire numbers at P48.
98-63	98-63S	52	A	06.12.08	-New diagram added for Copilot Collective Stick wiring diagram.
			B	07.01.30	-Re-issue of all diagrams.
98-64	98-64S	53	A	06.12.08	-New diagram added for Pilot and Copilot Cyclic Stick wiring diagram.
			B	07.01.30	-Re-issue of all diagrams.
			C	07.05.01	-'China Hat' switch wiring added to both pilot and copilot cyclic.
98-65	98-65S	54	A	06.12.08	-Engine Anti-Icing system added from B205. -Engine De-Ice system to be operable.
			B	07.01.30	-Ice Detector system installed and activated for certification.
98-66	98-66S	55	A	06.12.08	-New diagram added for electric oil cooler system – if installed.
			B	07.01.30	-Re-issue of all diagrams.
			C	07.05.01	-Wiring Diagram removed. Page intentionally left blank.
98-67	98-67S	56	A	06.12.08	-New diagram added for Pilot's and Copilot's Clock.
			B	07.01.30	-Re-issue of all diagrams.

ECN 20-105
2020.04.20

DESIGN	RD	**DART AEROSPACE LTD** HAWKESBURY, ONTARIO, CANADA
DRAWN	WK	
CHECKED	KB	DRAWING NO. REV. F
MFG. APPR.	LJ	D212-725-2 SHEET X OF XI
APPROVED	KB	TITLE SCALE
DE APPR.	KB	**WIRING DIAGRAMS** NTS
DATE	20.03.20	

COPYRIGHT © 2006 BY DART AEROSPACE LTD
THIS DOCUMENT IS PRIVATE AND CONFIDENTIAL AND IS SUPPLIED ON THE EXPRESS CONDITION THAT IT IS NOT TO BE USED FOR ANY PURPOSE OR COPIED OR COMMUNICATED TO ANY OTHER PERSON WITHOUT WRITTEN PERMISSION FROM DART AEROSPACE LTD.

98-68	98-68S	57	A	06.12.08	-Terminal blocks 27TB1 and 27TB2 hookup diagrams showing wire numbers and matrix type block.
			B	07.01.30	-Change due to jumpers added for Pilot and Copilot lights.
			C	07.05.01	-Changed due to additional Post lights installed for Fuel Quantity Select Switch, upper panel illumination and M21, #2 Dual Voltmeter lighting wiring removed as indicator removed.

ECN 20-105
2020.04.20

DESIGN	RD
DRAWN	WK
CHECKED	KB
MFG. APPR.	LJ
APPROVED	KB
DE APPR.	~~KB~~
DATE	20.03.20

DART AEROSPACE LTD
HAWKESBURY, ONTARIO, CANADA

DRAWING NO. D212-725-2 REV. F
SHEET XI OF XI

TITLE **WIRING DIAGRAMS** SCALE NTS

COPYRIGHT © 2006 BY DART AEROSPACE LTD
THIS DOCUMENT IS PRIVATE AND CONFIDENTIAL AND IS SUPPLIED ON THE EXPRESS CONDITION THAT IT IS NOT TO BE USED FOR ANY PURPOSE OR COPIED OR COMMUNICATED TO ANY OTHER PERSON WITHOUT WRITTEN PERMISSION FROM DART AEROSPACE LTD.

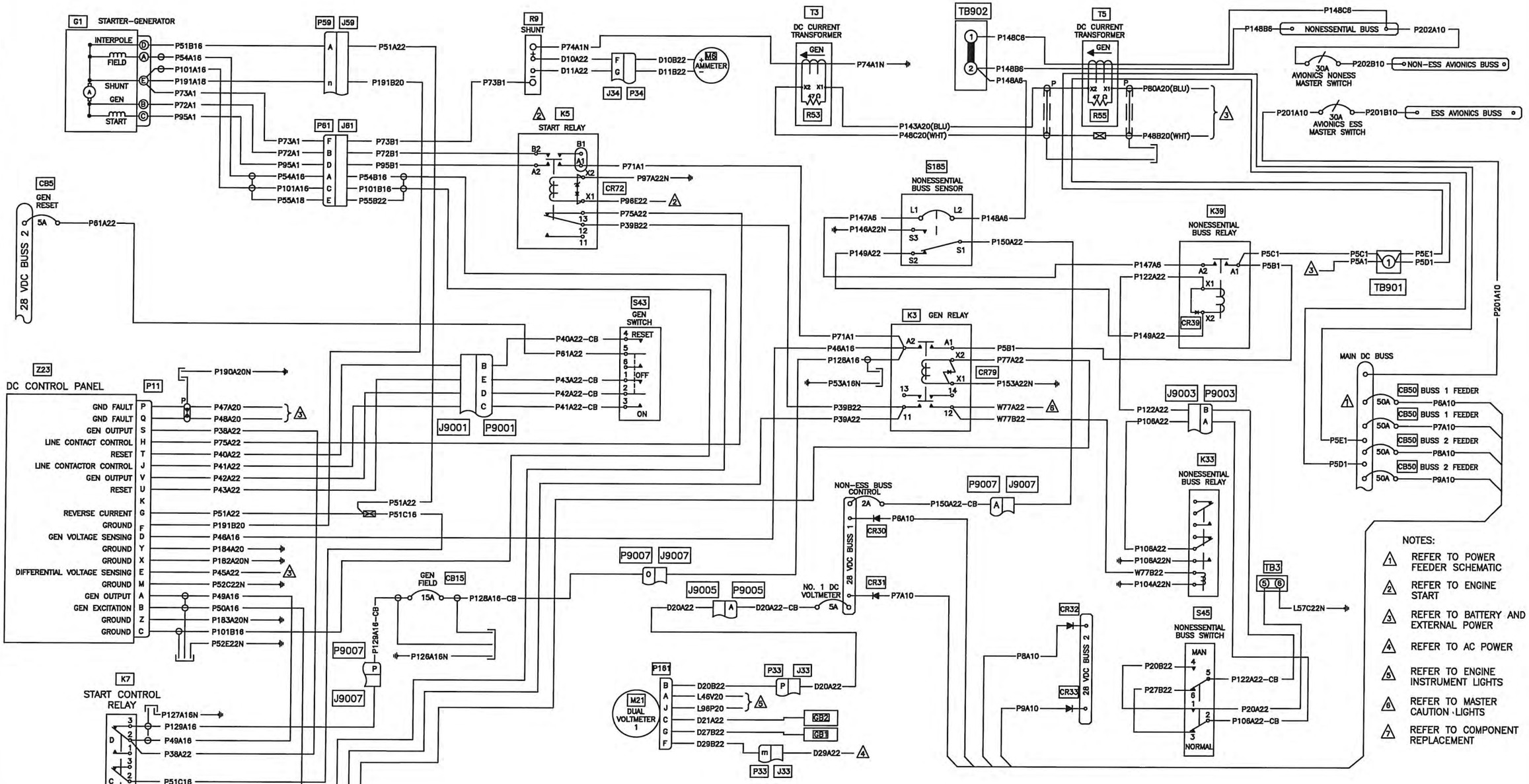

98-00-00
Page 46

RELEASED
ECN 20-105
2020.04.20

Figure 98-10S. DC GENERATOR SYSTEM

DESIGN	DRAWN BY	DART AEROSPACE LTD HAWKESBURY, ONTARIO, CANADA	
RD	RD		
CHECKED	APPROVED	DRAWING NO.	REV. C
RD		D212-725-2	SHEET 1 OF 57
DATE		TITLE	SCALE
07.05.01		FIGURE 98-10S	NTS

Copyright 2006 by DART AEROSPACE LTD

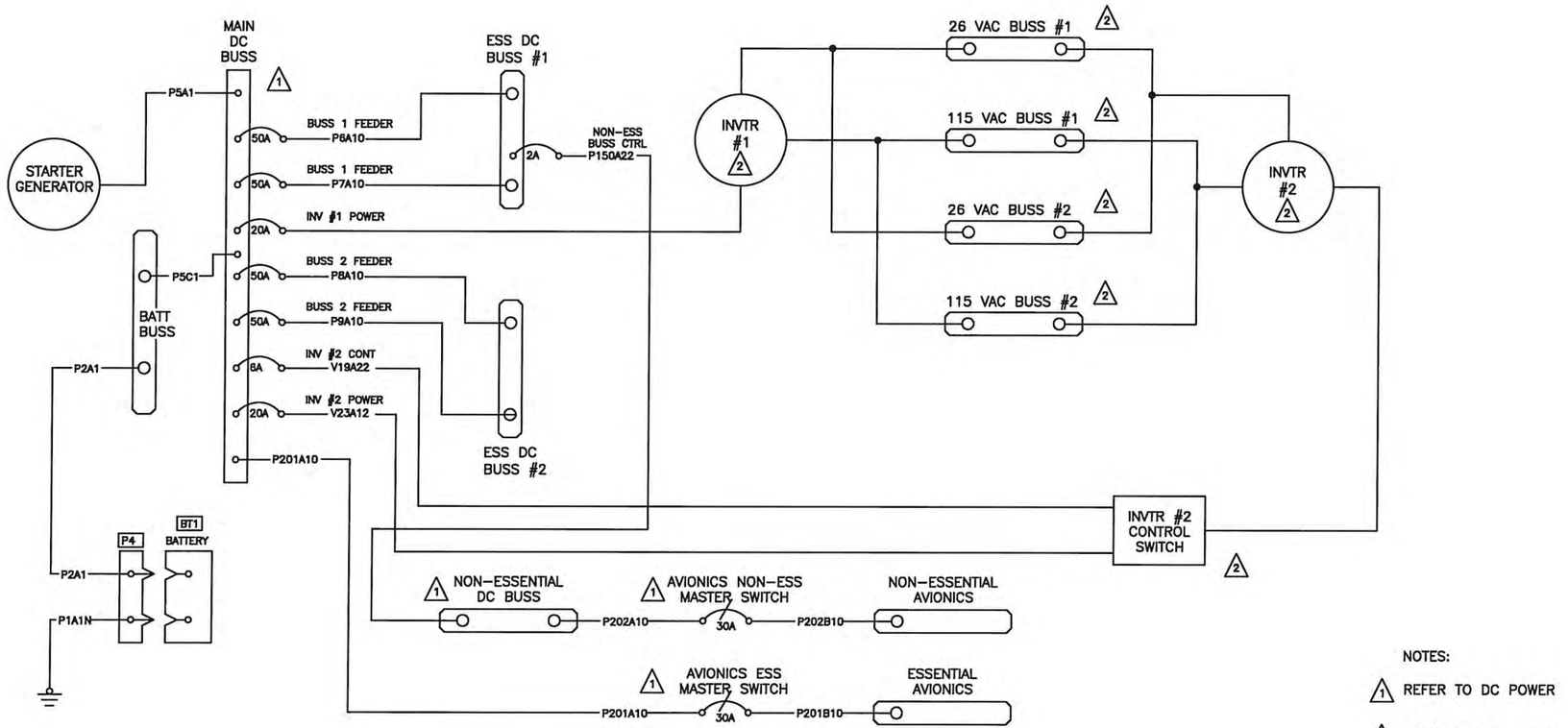

Figure 98–11S. DC and AC Power Feeder Schematic (Simplified)

RELEASED
ECN20-105
2020.04.20

DESIGN: RD	DRAWN BY: RD	DART AEROSPACE LTD, HAWKESBURY, ONTARIO, CANADA	
CHECKED: RD	APPROVED: KB	DRAWING NO.: D212–725–2	REV. B
DATE: 07.01.30		TITLE: FIGURE 98–11S	SHEET 2 OF 57 SCALE: NTS

Copyright 2006 by DART AEROSPACE LTD

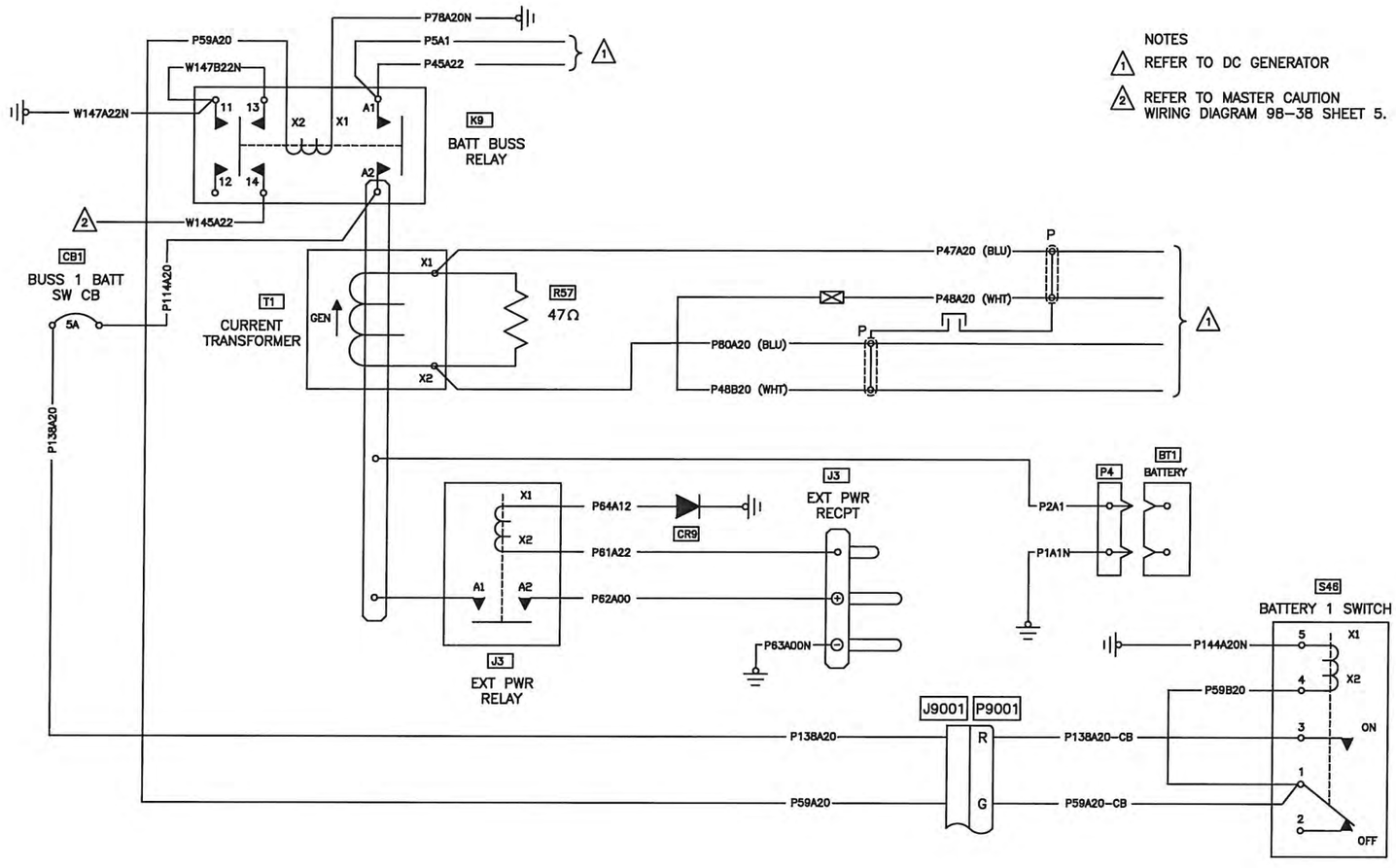

NOTES

1. REFER TO DC GENERATOR
2. REFER TO MASTER CAUTION WIRING DIAGRAM 98–38 SHEET 5.

Figure 98–12S. BATTERY AND EXTERNAL POWER

RELEASED
ECN 20 - 105
2020.04.20

DESIGN: RD	DRAWN BY: RD	DART AEROSPACE LTD, HAWKESBURY, ONTARIO, CANADA	
CHECKED: RD	APPROVED: KB	DRAWING NO.: D212–725–2	REV. C
DATE: 07.05.01		TITLE: FIGURE 98–12S	SHEET 3 OF 57 SCALE: NTS

Copyright 2006 by DART AEROSPACE LTD

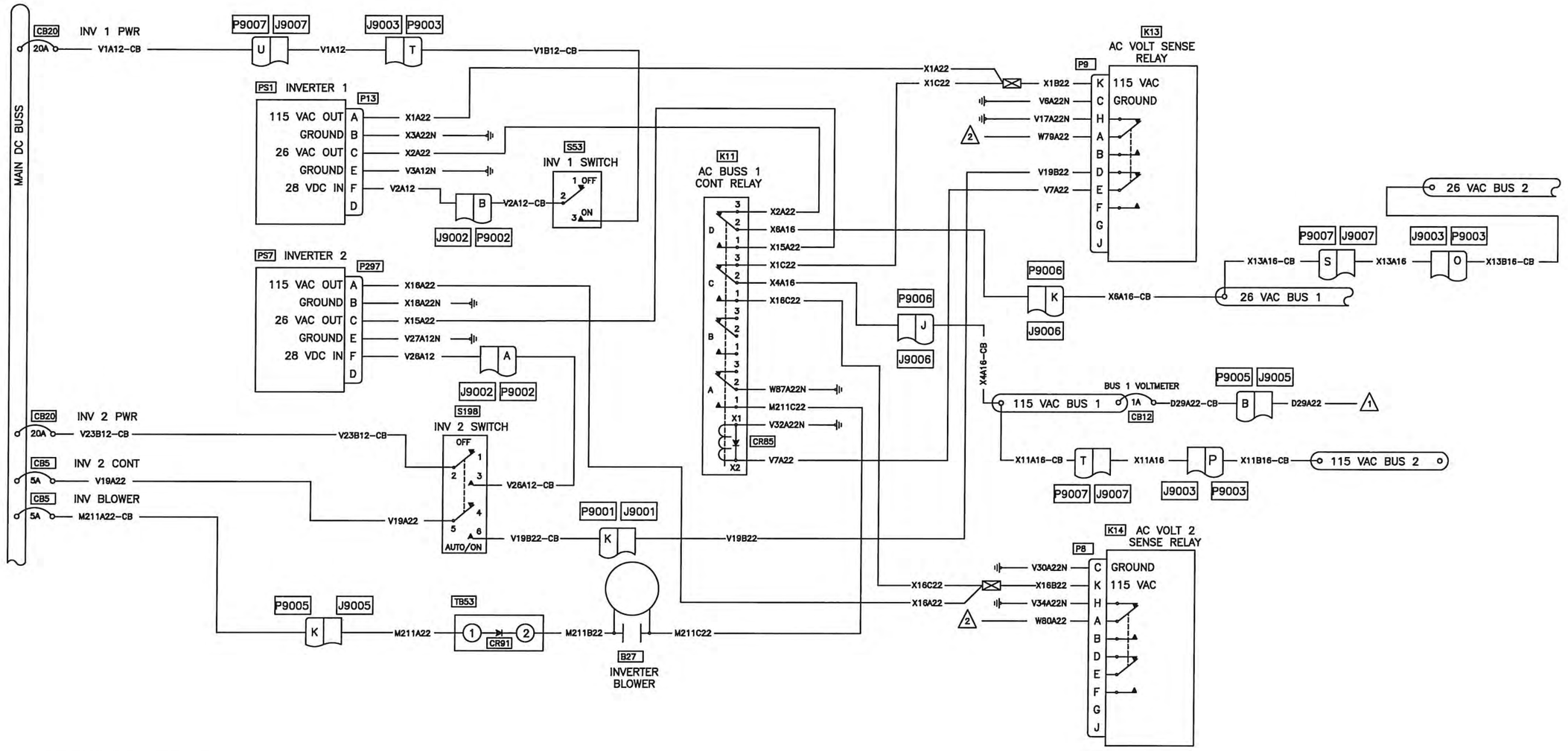

NOTES:

1. REFER TO DC GENERATOR
2. REFER TO MASTER CAUTION LIGHTS

Figure 98-13S. AC POWER

RELEASED
ECN 20-105
2020.04.20

DESIGN: RD	DRAWN BY: RD	DART AEROSPACE LTD, HAWKESBURY, ONTARIO, CANADA	
CHECKED: RD	APPROVED: KB	DRAWING NO.: D212-725-2	REV. B
DATE: 07.01.30		TITLE: FIGURE 98-13S	SHEET 4 OF 57, SCALE: NTS

Copyright 2006 by DART AEROSPACE LTD

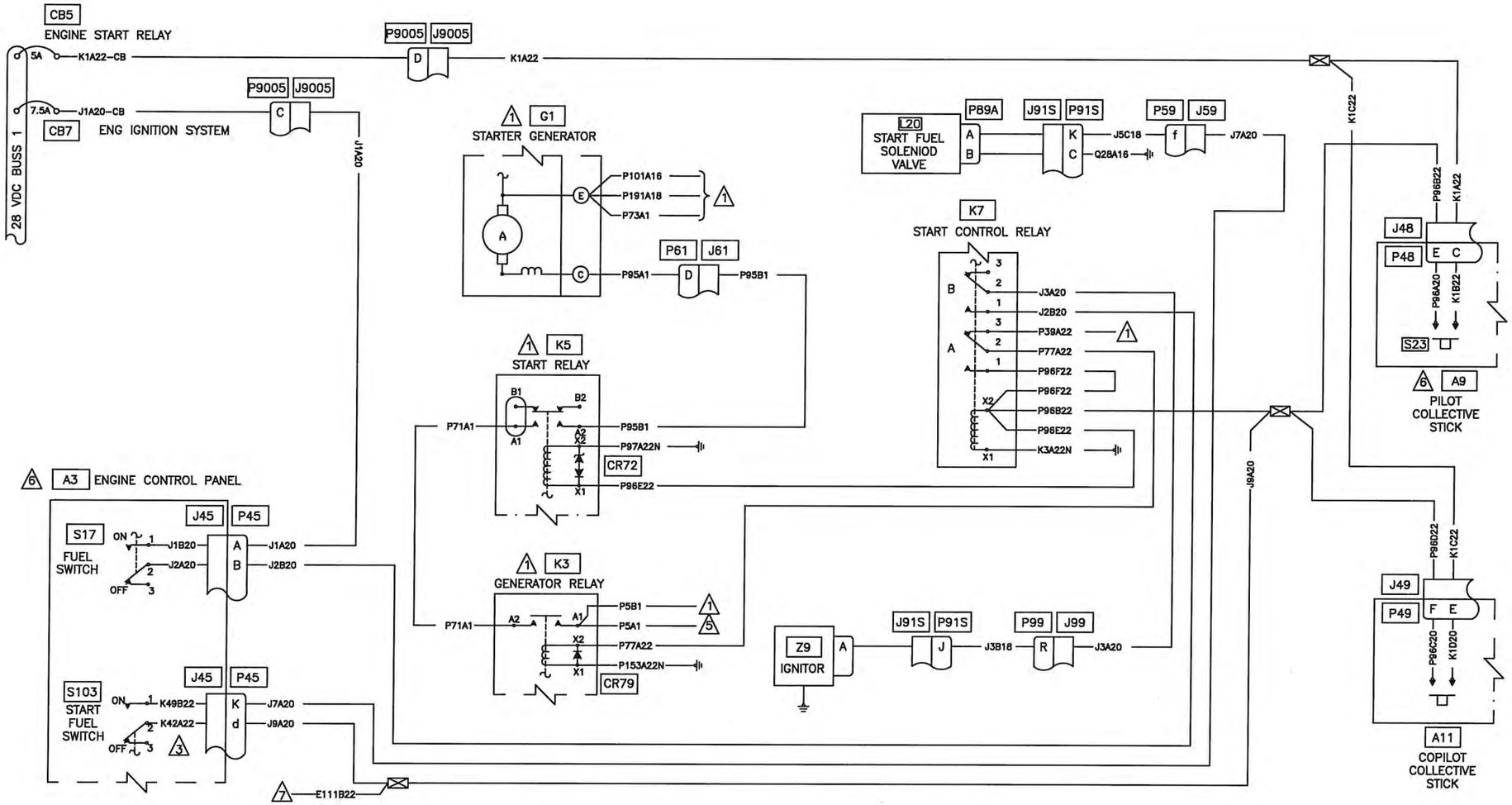

NOTES:

1. REFER TO DC GENERATOR
2. REFER TO FUEL SYSTEM
3. SWITCH INSTALLED PER START FUEL S.T.C. SH4T15NM
4. REFER TO MASTER CAUTION AND RPM CAUTION LIGHTS
5. REFER TO BATTERY AND EXTERNAL POWER
6. REFER TO COMPONENT REPLACEMENT
7. REFER TO MGT INDICATOR WIRING DIAGRAM 98-23S. INSTALLED ONLY IF ANALOG/DIGITAL GAUGE INSTALLED.

Figure 98-14S. ENGINE START

RELEASED
ECN 20-105
2020.04.20

DESIGN	DRAWN BY	DART AEROSPACE LTD HAWKESBURY, ONTARIO, CANADA	
RD	RD		
CHECKED	APPROVED	DRAWING NO.	REV. C
RD		D212-725-2	SHEET 5 OF 57
DATE		TITLE	SCALE
07.05.01		FIGURE 98-14S	NTS

Copyright 2006 by DART AEROSPACE LTD

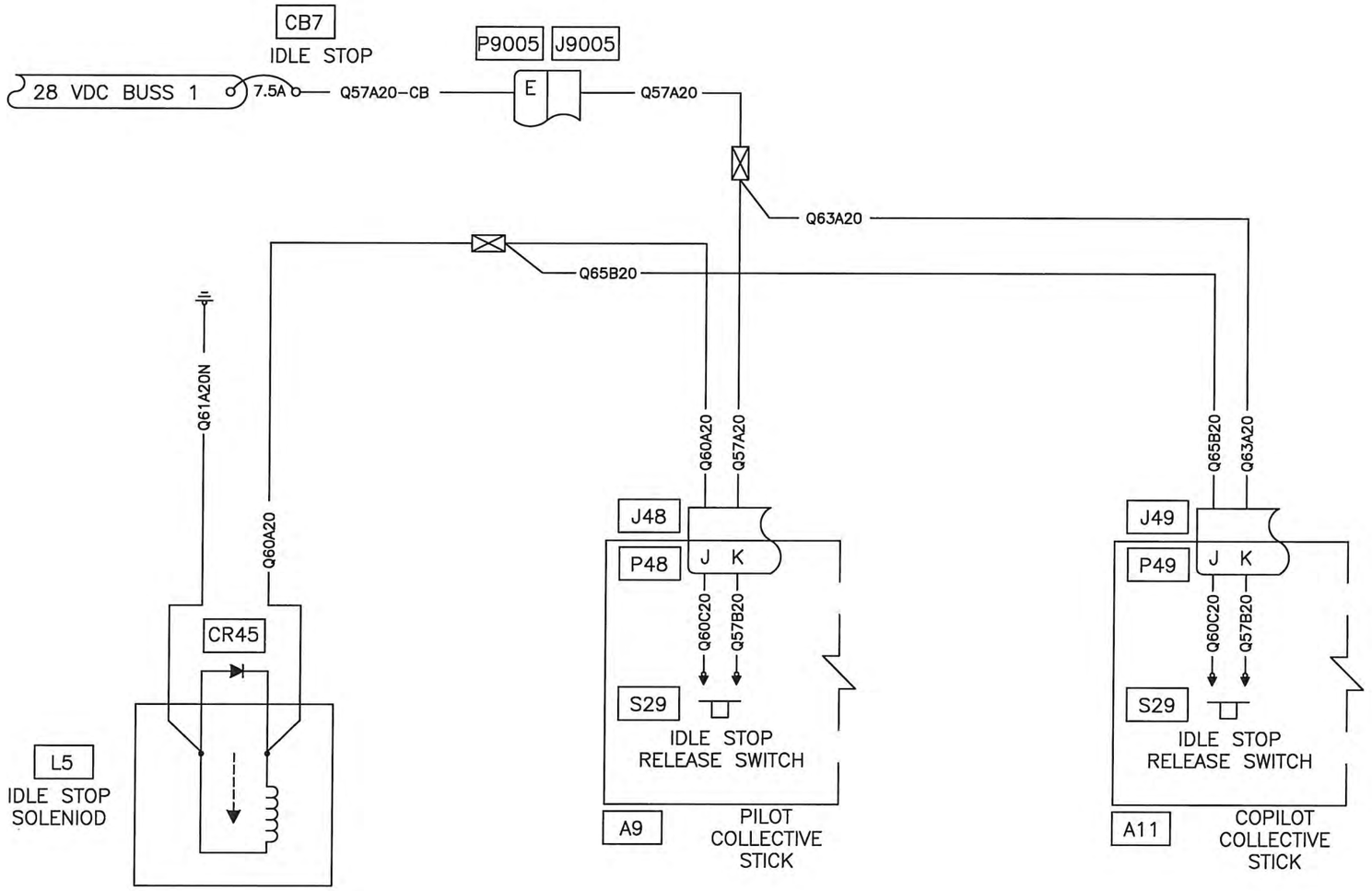

Figure 98–15S. IDLE STOP

RELEASED
ECN 20-105
2020.04.20

DESIGN: RD	DRAWN BY: RD	DART AEROSPACE LTD, HAWKESBURY, ONTARIO, CANADA	
CHECKED: RD	APPROVED: KB	DRAWING NO.: D212-725-2	REV. B, SHEET 6 OF 57
DATE: 07.01.30		TITLE: FIGURE 98–15S	SCALE: NTS

Copyright 2006 by DART AEROSPACE LTD

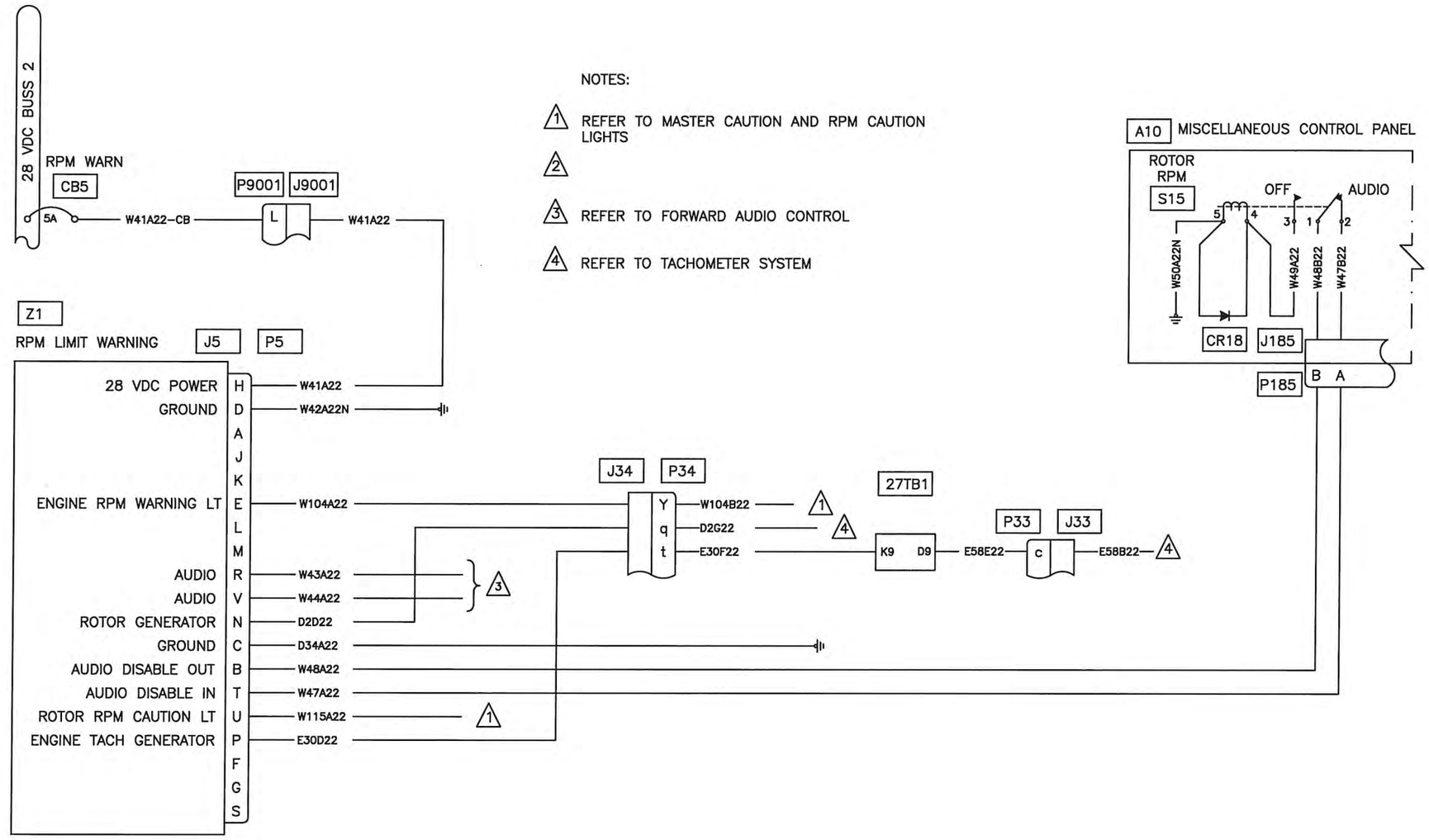

Figure 98–17S. RPM LIMIT DETECTOR

98–00–00
Page 53

RELEASED
ECN 20-105
2020.04.20

DESIGN: RD	DRAWN BY: RD	DART AEROSPACE LTD, HAWKESBURY, ONTARIO, CANADA	
CHECKED: RD	APPROVED: KB	DRAWING NO.: D212–725–2	REV. C
DATE: 07.05.01		TITLE: FIGURE 98–17S	SHEET 7 OF 57
			SCALE: NTS

Copyright 2006 by DART AEROSPACE LTD

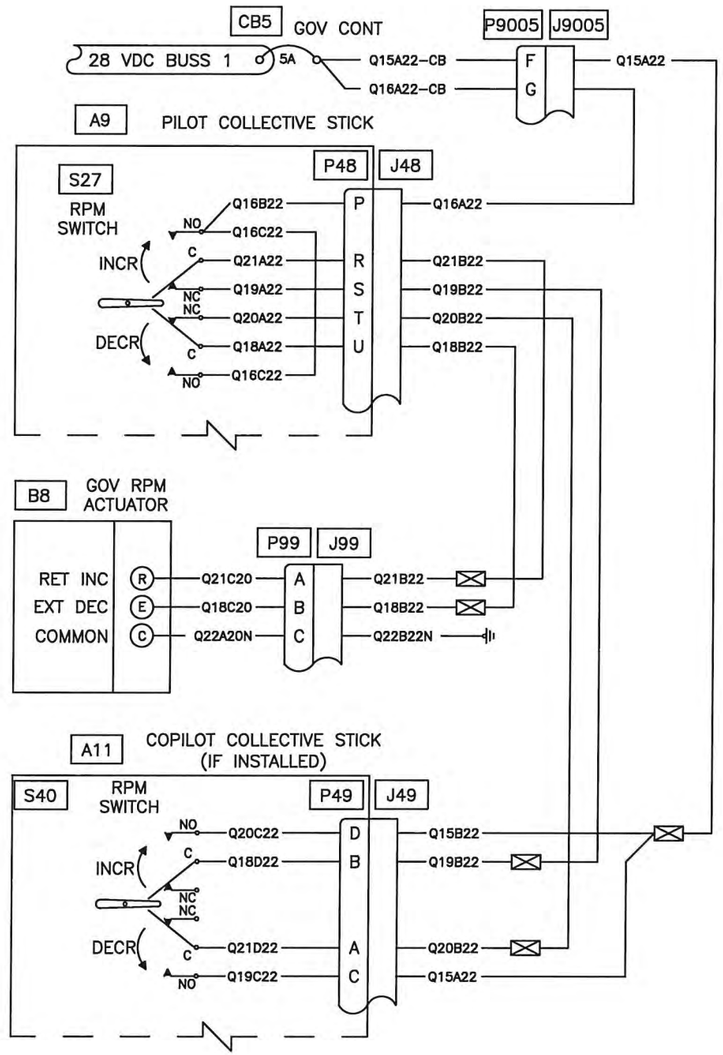

Figure 98–18S. GOVERNOR RPM

RELEASED
ECN 20 - 105
2020.04.20

DESIGN	DRAWN BY	DART AEROSPACE LTD HAWKESBURY, ONTARIO, CANADA	
RD	RD		
CHECKED	APPROVED	DRAWING NO.	REV. C
RD	KB	D212–725–2	SHEET 8 OF 57
DATE		TITLE	SCALE
07.05.01		FIGURE 98–18S	NTS

Copyright 2006 by DART AEROSPACE LTD

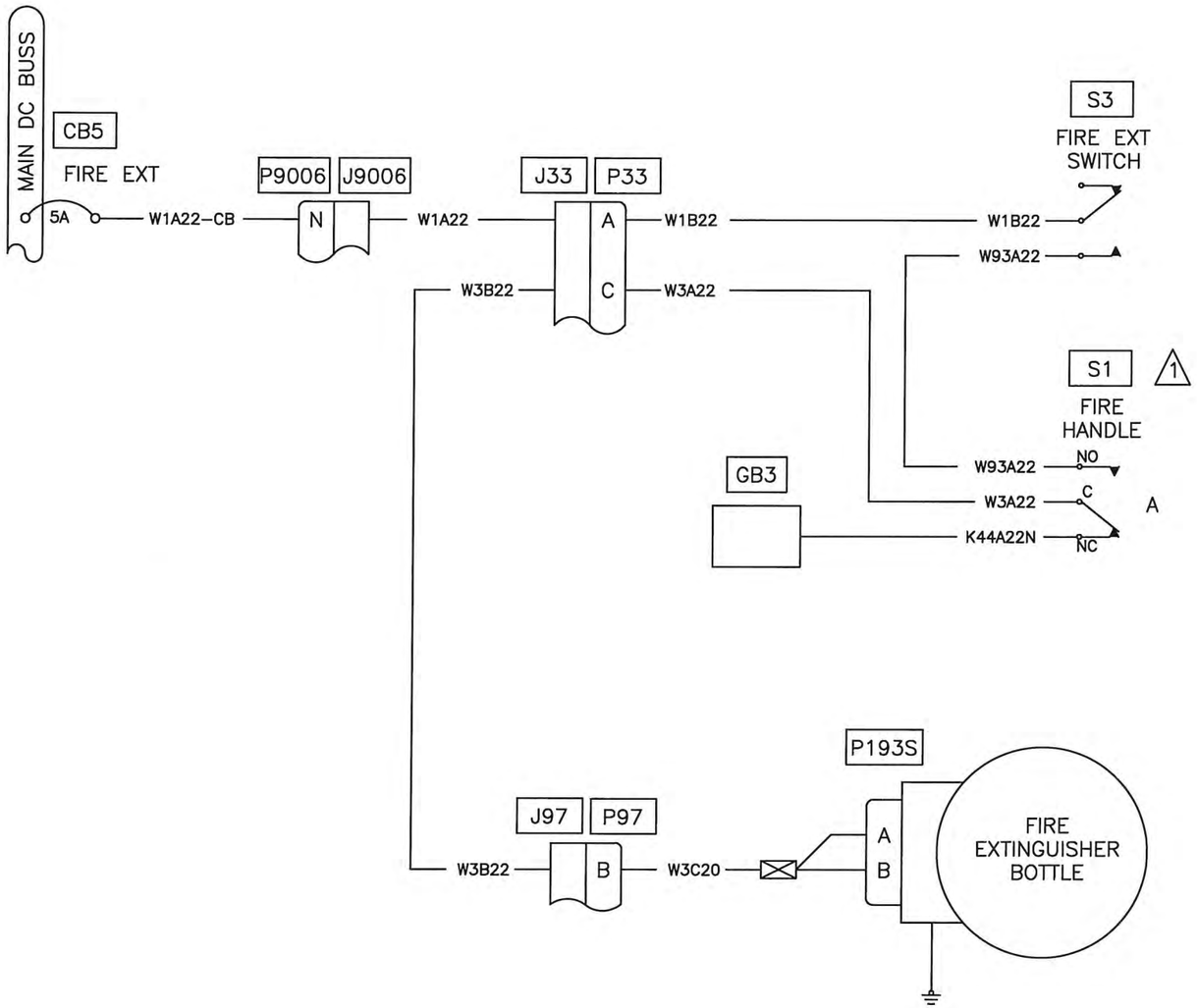

NOTES:

1 REFER TO HEATING/AIR CONDITIONING SYSTEM FOR ADDITIONAL SWITCH POSITION HOOKUP.

Figure 98–19S. FIRE EXTINGUISHER SYSTEM

RELEASED
ECN 20-105
2020.04.20

DESIGN	DRAWN BY	DART AEROSPACE LTD HAWKESBURY, ONTARIO, CANADA	
RD	RD		
CHECKED	APPROVED	DRAWING NO.	REV. B
RD	KB	D212–725–2	SHEET 9 OF 57
DATE		TITLE	SCALE
07.01.30		FIGURE 98–19S	NTS

Copyright 2006 by DART AEROSPACE LTD

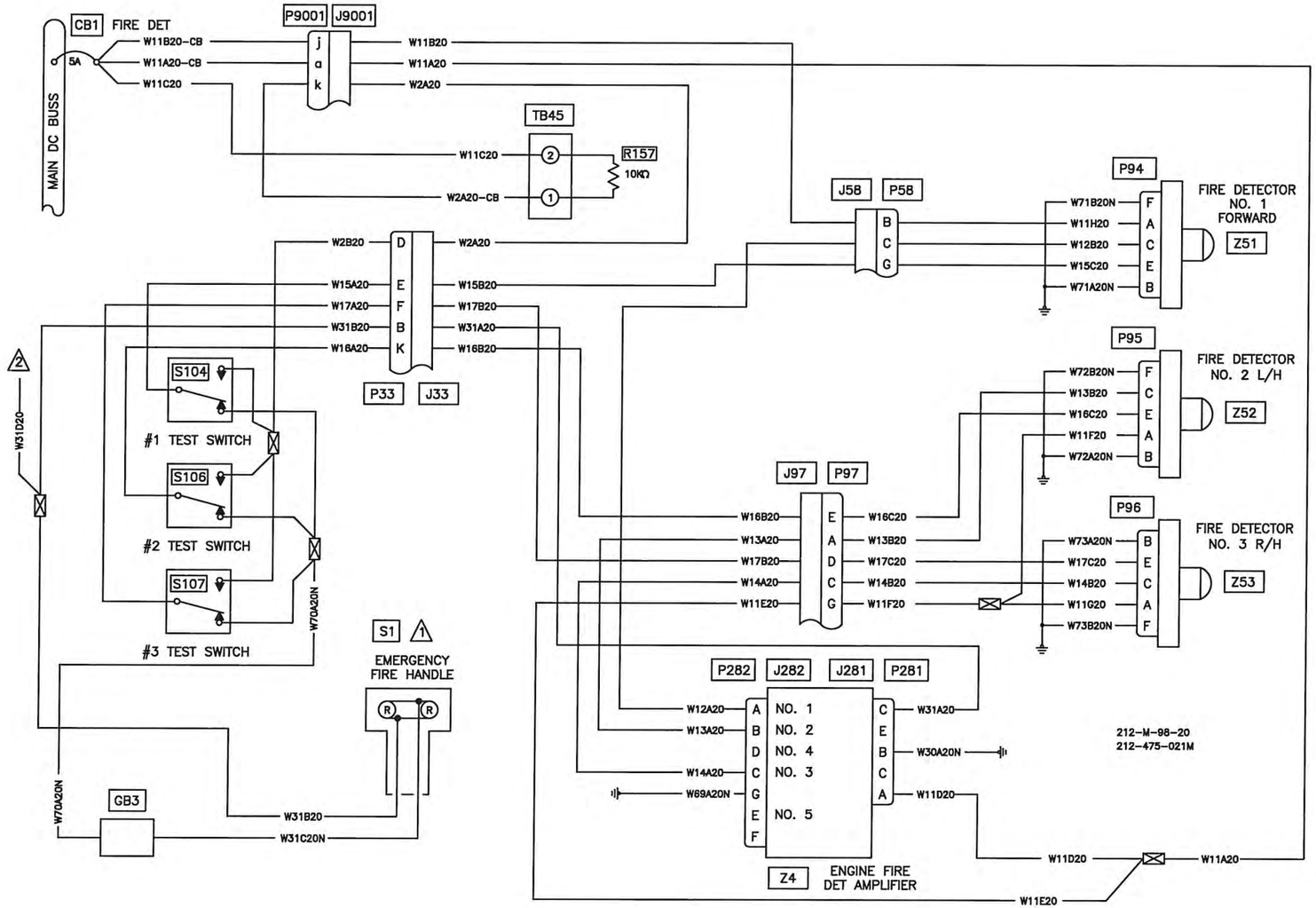

NOTES:

1. THE HANDLE SWITCHES ARE USED IN THE FIRE EXTINGUISHER SYSTEM AND HEATER/AIR CONDITIONING SYSTEM.
2. REFER TO VERTICAL REFERENCE DOOR WIRING DIAGRAM IF INSTALLED

Figure 98-20S. ENGINE FIRE DETECTION

RELEASED
ECN 20-105
2020.04.20

DESIGN: RD	DRAWN BY: RD	DART AEROSPACE LTD, HAWKESBURY, ONTARIO, CANADA	
CHECKED: RD	APPROVED: KB	DRAWING NO.: D212-725-2	REV. C
DATE: 07.05.01		TITLE: FIGURE 98-20S	SHEET 10 OF 57, SCALE: NTS

Copyright 2006 by DART AEROSPACE LTD

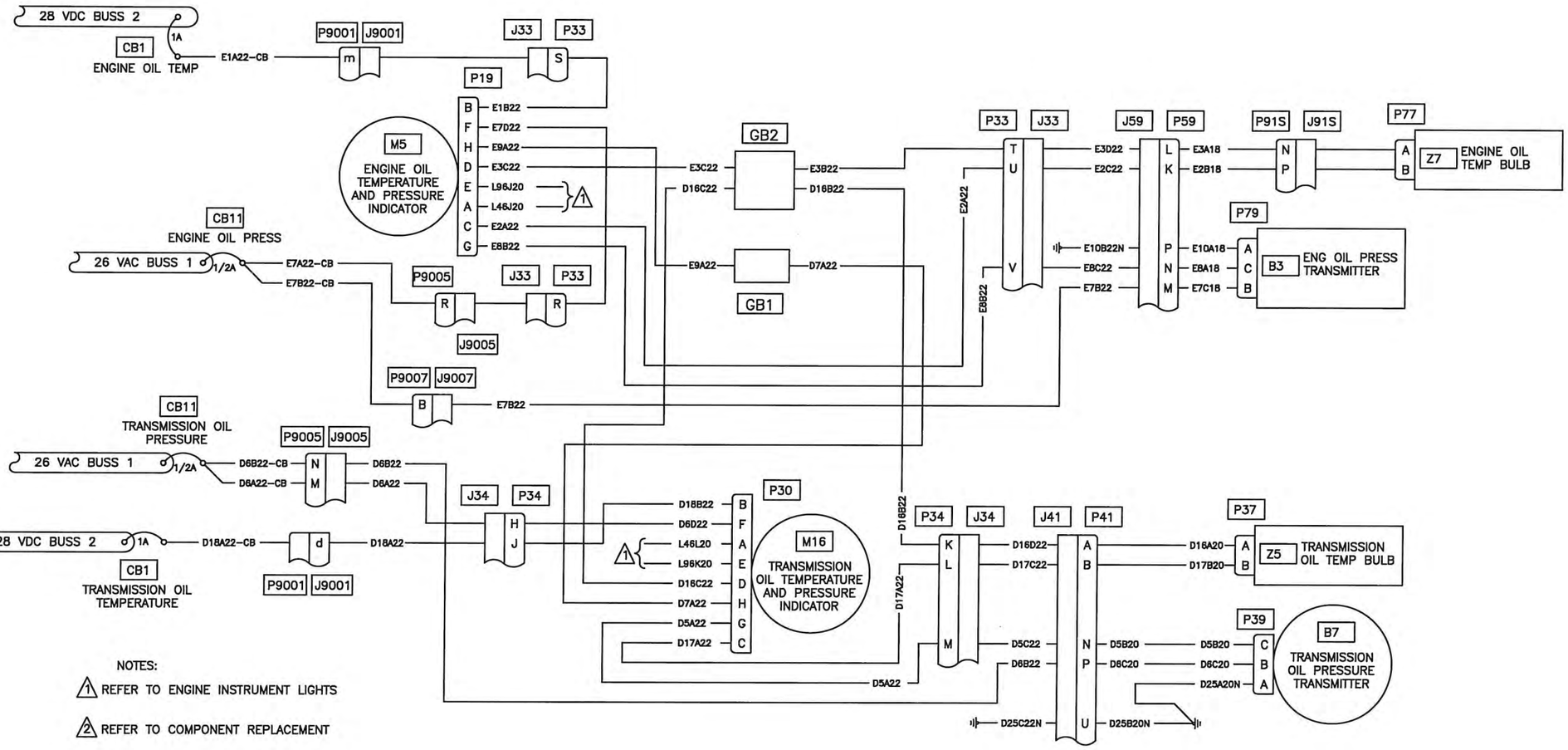

Figure 98–21S. OIL INDICATOR SYSTEM

ECN 20-105
2020.04.20

DESIGN	DRAWN BY	DART AEROSPACE LTD HAWKESBURY, ONTARIO, CANADA	
RD	RD		
CHECKED	APPROVED	DRAWING NO.	REV. C
RD	KB	D212–725–2	SHEET 11 OF 57
DATE		TITLE	SCALE
07.05.01		FIGURE 98–21S	NTS

Copyright 2006 by DART AEROSPACE LTD

NOTES:

1. REFER TO ENGINE INSTRUMENT LIGHTS WIRING DIAGRAM 98–36S.
2. REFER TO RPM LIMIT DETECTOR WIRING DIAGRAM 98–17S
3. REFER TO COMPONENT REPLACEMENT
4. USE MS3456W14S–7S CONNECTORS IN ALL 4 PLACES
5.
6.

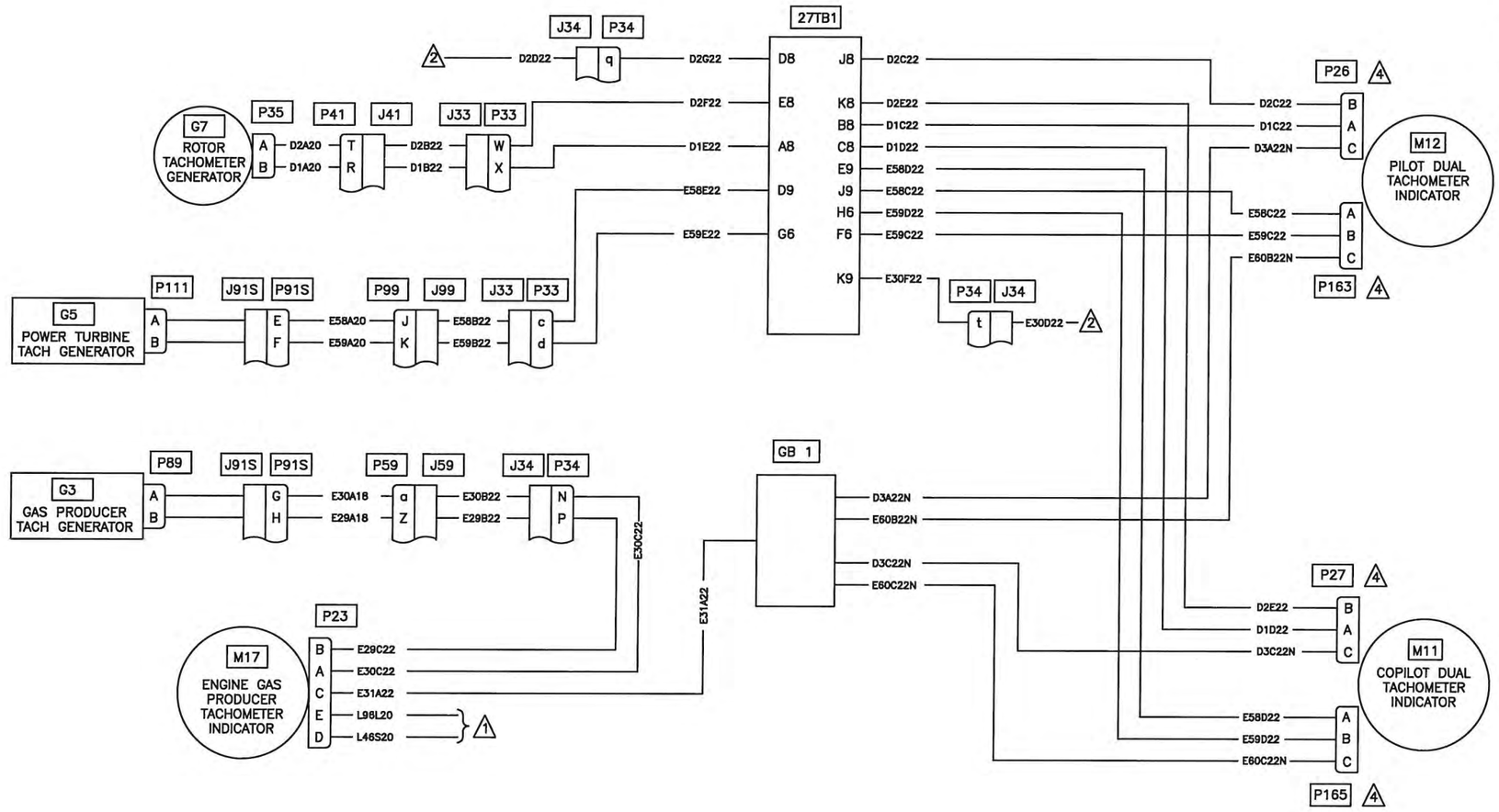

Figure 98–22S. DUAL TACHOMETER AND GAS PRODUCER TACHOMETER INDICATOR SYSTEM

ECN 20-105
2020.04.20

DESIGN: RD	DRAWN BY: RD	DART AEROSPACE LTD, HAWKESBURY, ONTARIO, CANADA	
CHECKED: RD	APPROVED: KB	DRAWING NO.: D212–725–2	REV. C
DATE: 07.05.01		TITLE: FIGURE 98–22S	SHEET 12 OF 57
			SCALE: NTS

Copyright 2006 by DART AEROSPACE LTD

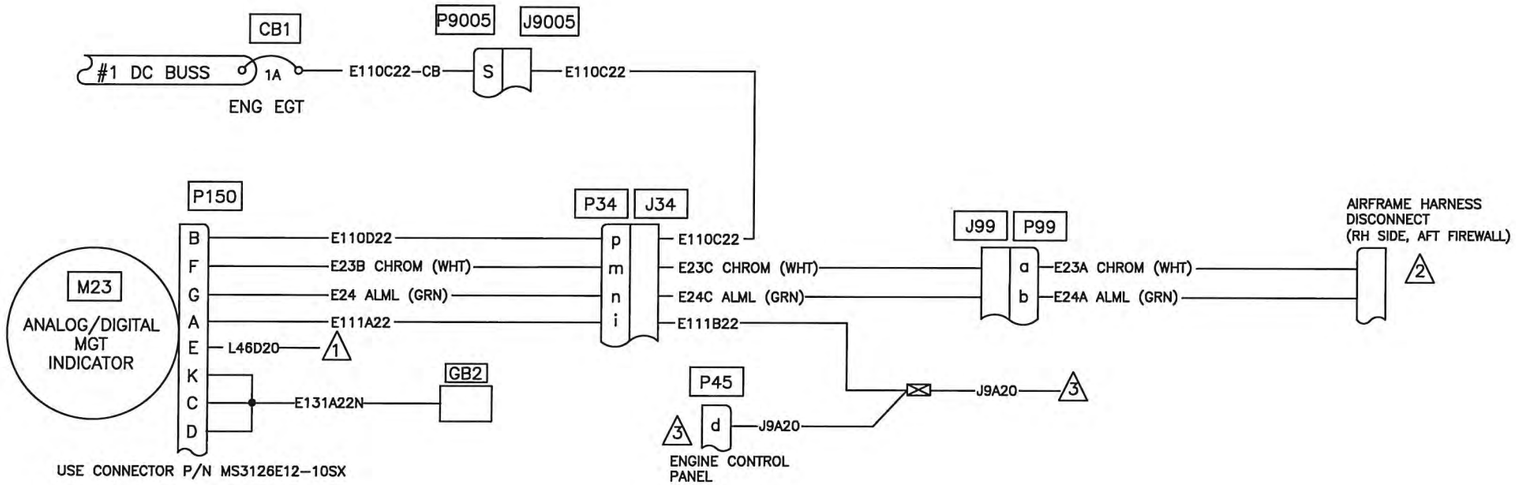

NOTES:

1. REFER TO ENGINE INSTRUMENT LIGHTS WIRING DIAGRAM 98-36S.
2. REFER TO ENGINE MANUFACTURER'S MAINTENANCE MANUAL
3. REFER TO ENGINE START WIRING DIAGRAM 98-14S.

Figure 98-23S. MGT/EGT INDICATOR SYSTEM

ECN 20-105
2020.04.20

DESIGN: RD	DRAWN BY: RD	DART AEROSPACE LTD, HAWKESBURY, ONTARIO, CANADA	
CHECKED: RD	APPROVED: KB	DRAWING NO.: D212-725-2	REV. C
DATE: 07.05.01	TITLE: FIGURE 98-23S		SHEET 13 OF 57
		SCALE: NTS	

Copyright 2006 by DART AEROSPACE LTD

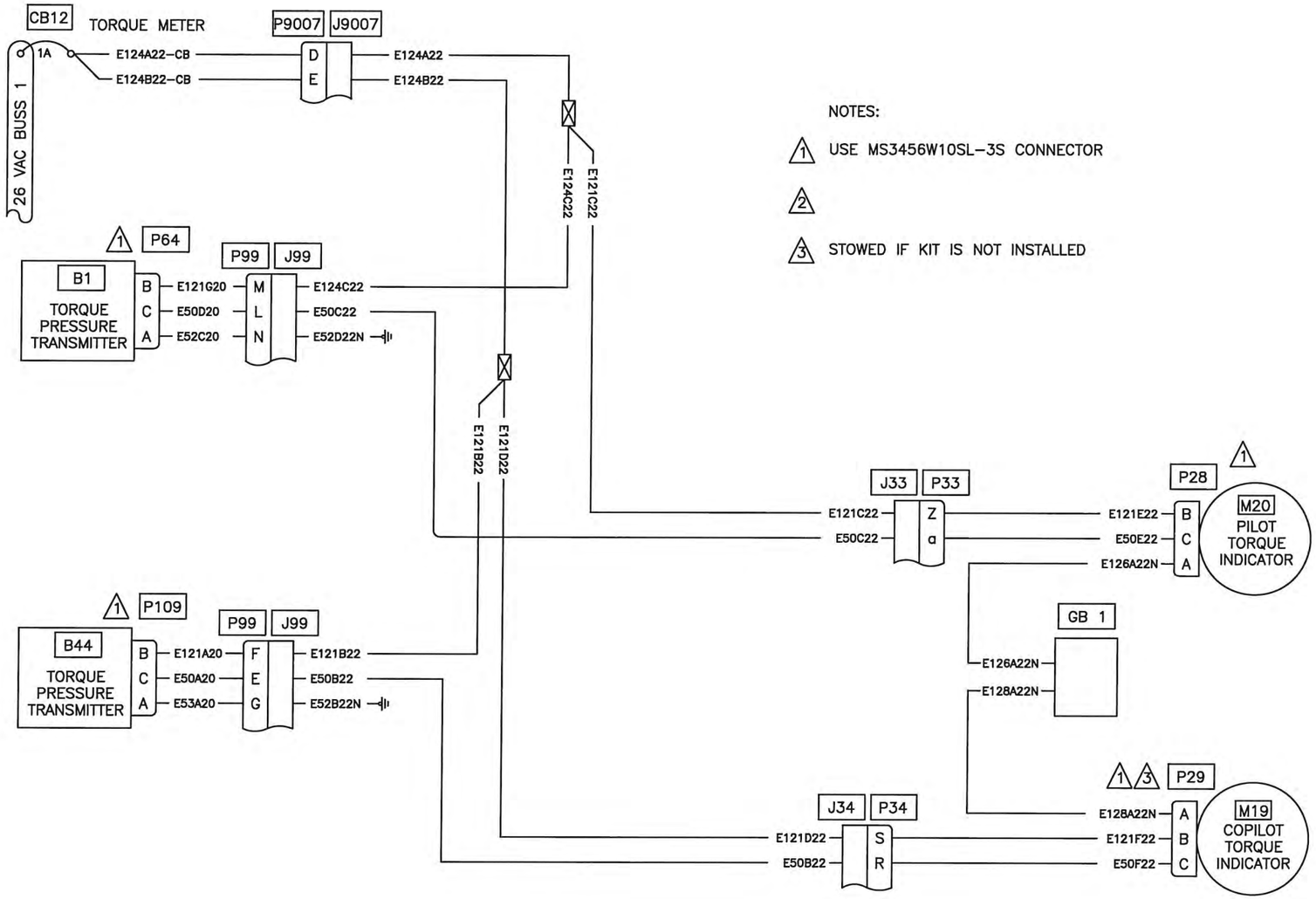

Figure 98–24S. TORQUE INDICATOR SYSTEM

RELEASED
ECN 20-105
2020.04.20

DESIGN	DRAWN BY	DART AEROSPACE LTD HAWKESBURY, ONTARIO, CANADA	
RD	RD		
CHECKED	APPROVED	DRAWING NO.	REV. C
RD	KB	D212–725–2	SHEET 14 OF 57
DATE		TITLE	SCALE
07.05.01		FIGURE 98–24S	NTS

Copyright 2006 by DART AEROSPACE LTD

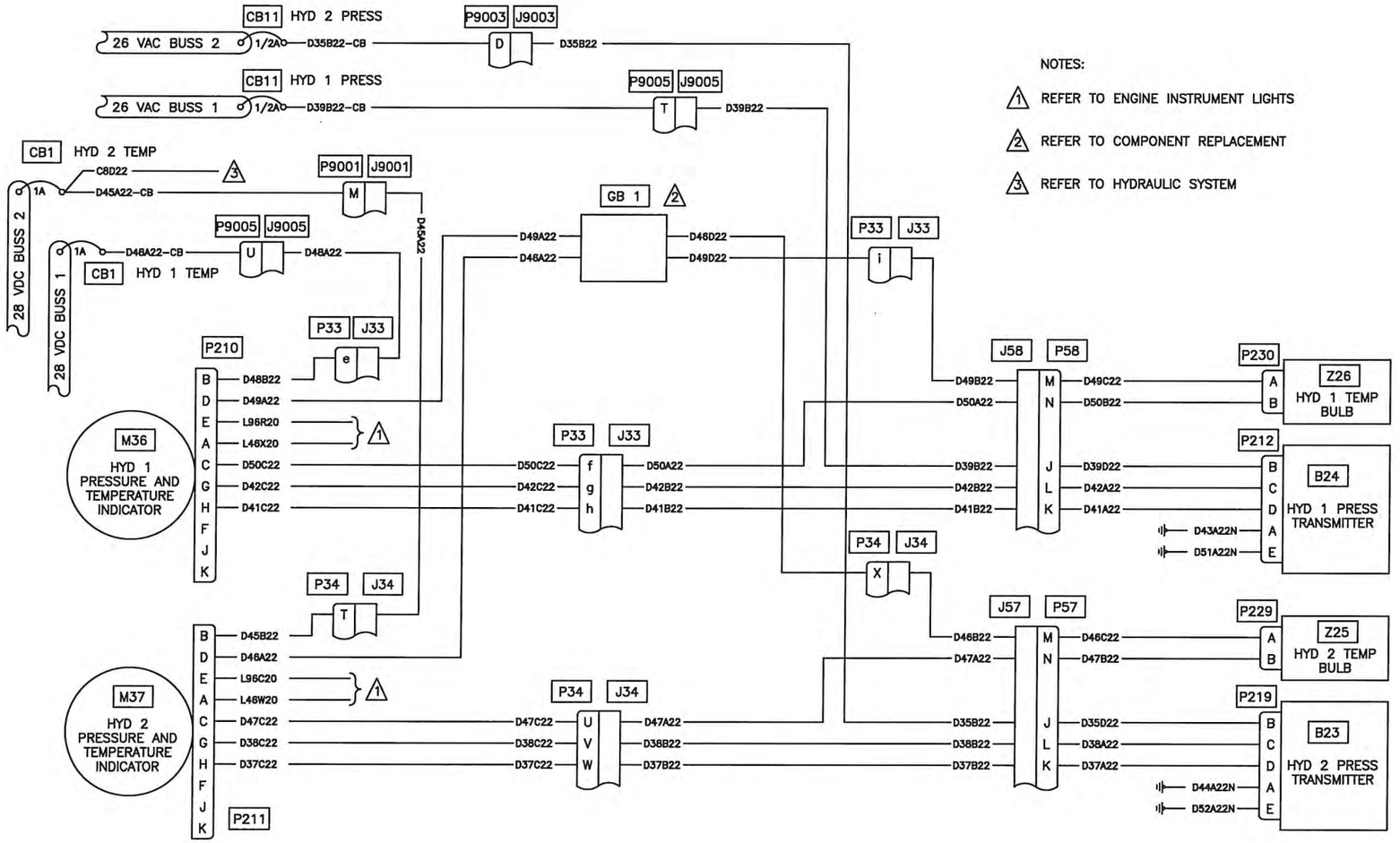

Figure 98–25S. HYDRAULIC PRESSURE AND TEMPERATURE INDICATORS

RELEASED
ECN 20-105
2020.04.20

DESIGN	DRAWN BY	DART AEROSPACE LTD HAWKESBURY, ONTARIO, CANADA	
RD	RD		
CHECKED	APPROVED	DRAWING NO.	REV. B
RD		D212–725–2	SHEET 15 OF 57
DATE		TITLE	SCALE
07.01.30		FIGURE 98–25S	NTS

Copyright 2006 by DART AEROSPACE LTD

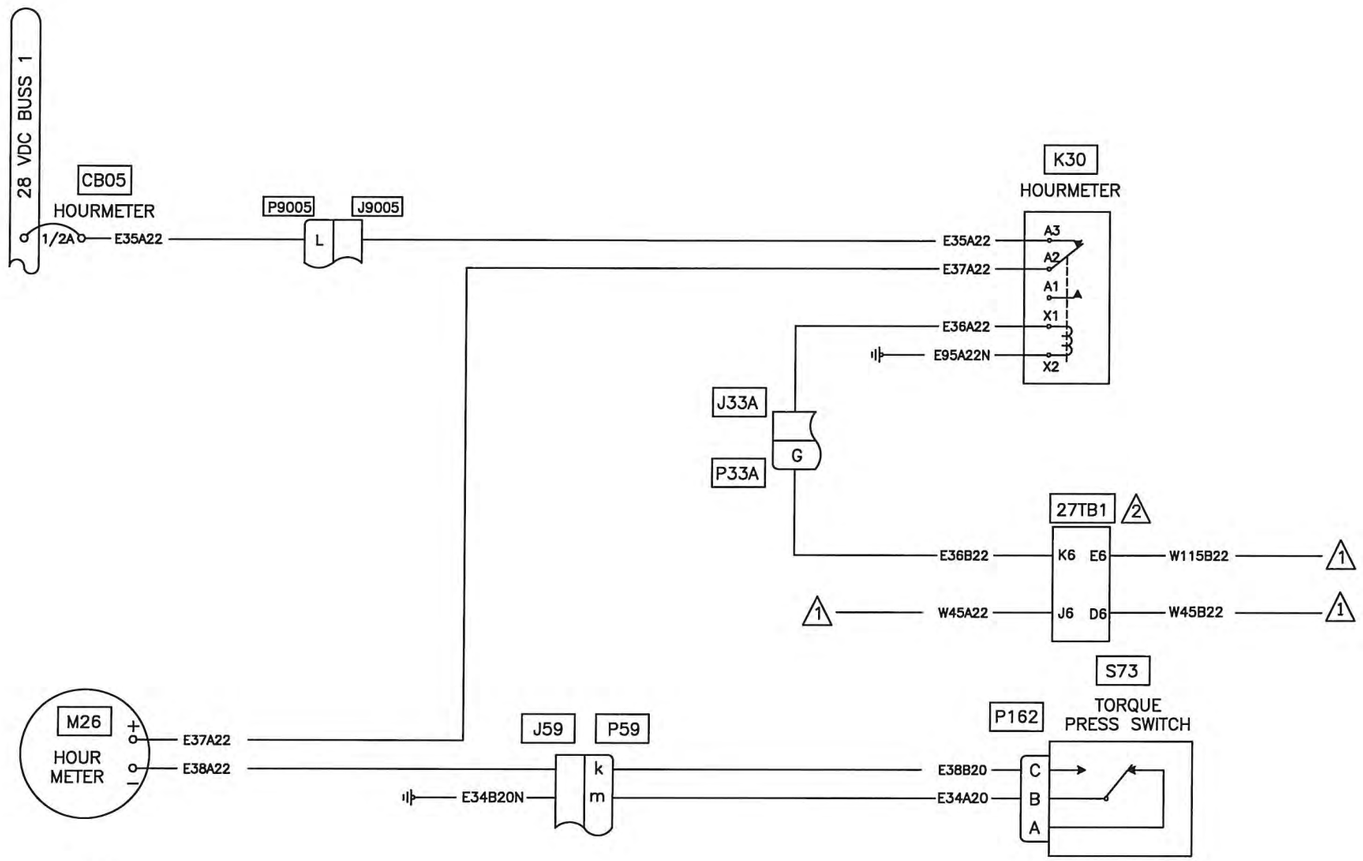

NOTES:

1. REFER TO MASTER CAUTION AND RPM CAUTION LIGHTS
2. REFER TO COMPONENT REPLACEMENT

Figure 98–26S. HOURMETER

RELEASED
ECN20-105
2020.04.20

DESIGN	DRAWN BY	DART AEROSPACE LTD HAWKESBURY, ONTARIO, CANADA	
RD	RD		
CHECKED	APPROVED	DRAWING NO.	REV. C
RD	KD	D212–725–2	SHEET 16 OF 57
DATE		TITLE	SCALE
07.05.01		FIGURE 98–26S	NTS

Copyright 2006 by DART AEROSPACE LTD

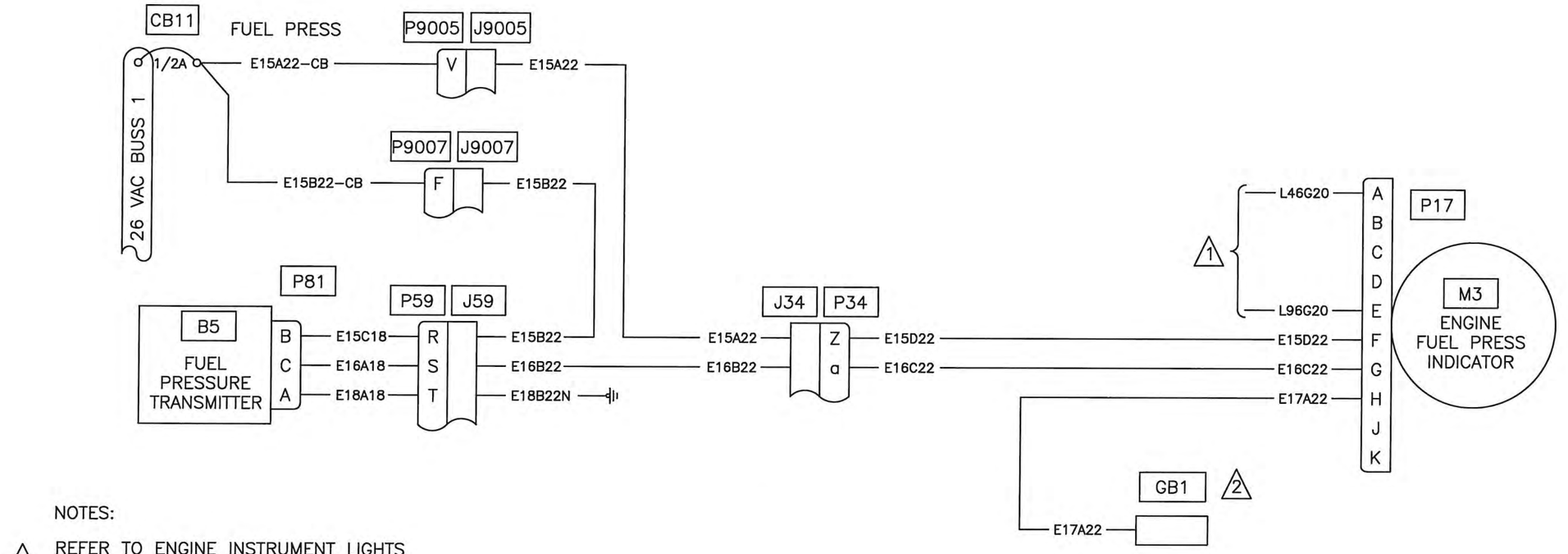

NOTES:

1. REFER TO ENGINE INSTRUMENT LIGHTS
2. REFER TO COMPONENT REPLACEMENT

Figure 98–27S. ENGINE FUEL PRESSURE INDICATOR SYSTEM

ECN20-105
2020.04.20

DESIGN	DRAWN BY	DART AEROSPACE LTD HAWKESBURY, ONTARIO, CANADA	
RD	RD		
CHECKED	APPROVED	DRAWING NO.	REV. B
RD	KB	D212–725–2	SHEET 17 OF 57
DATE		TITLE	SCALE
07.01.30		FIGURE 98–27S	NTS

Copyright 2006 by DART AEROSPACE LTD

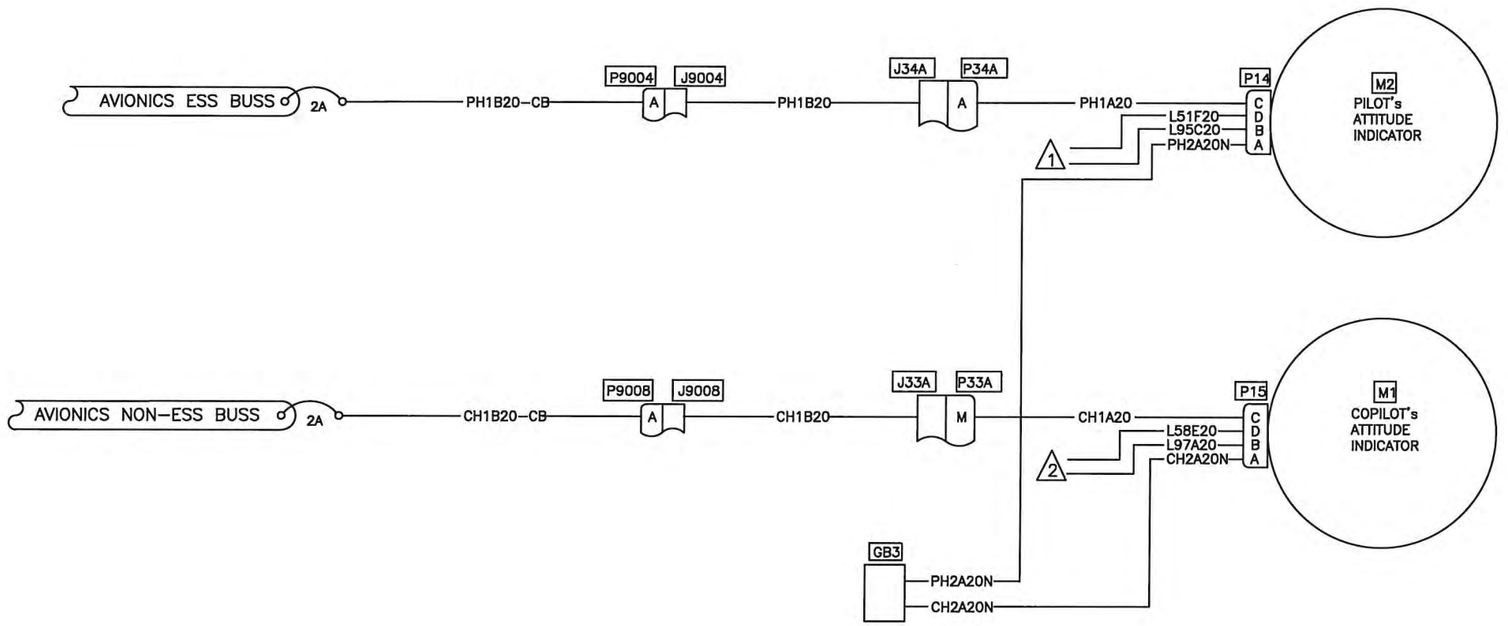

NOTES:

1. REFER TO PILOT's INSTRUMENT LIGHTING
2. REFER TO COPILOT's INSTRUMENT LIGHTING

Figure 98-28S. PILOT AND COPILOT ATTITUDE INDICATORS

RELEASED
ECN20-105
2020.04.20

DESIGN	DRAWN BY	DART AEROSPACE LTD HAWKESBURY, ONTARIO, CANADA	
RD	RD		
CHECKED	APPROVED	DRAWING NO.	REV. B
RD	KB	D212-725-2	SHEET 18 OF 57
DATE		TITLE	SCALE
07.01.30		FIGURE 98-28S	NTS

Copyright 2006 by DART AEROSPACE LTD

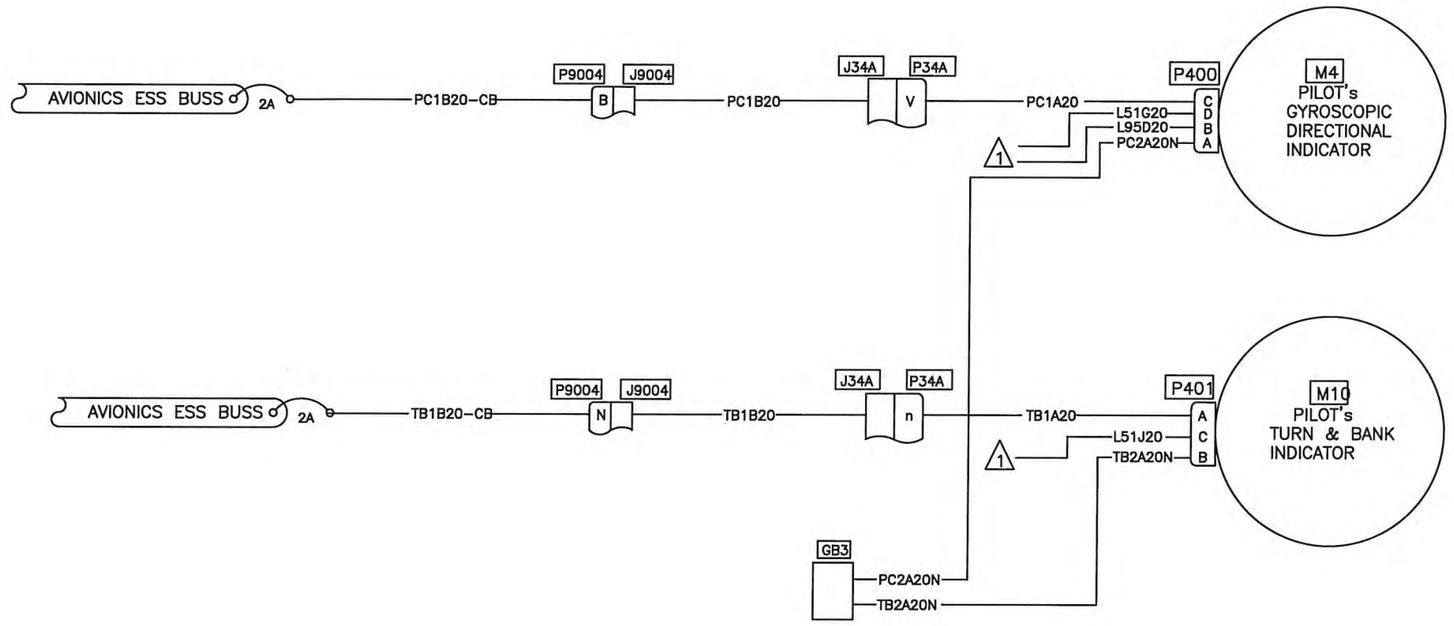

NOTES:

1. REFER TO PILOT's INSTRUMENT LIGHTING

Figure 98–29S. PILOT'S TURN & BANK AND GYRO DIRECTIONAL INDICATORS

RELEASED
ECN 20-105
2020.04.20

DESIGN	DRAWN BY	DART AEROSPACE LTD HAWKESBURY, ONTARIO, CANADA	
RD	RD		
CHECKED	APPROVED	DRAWING NO.	REV. B
RD	KB	D212-725-2	SHEET 19 OF 57
DATE		TITLE	SCALE
07.01.30		FIGURE 98-29S	NTS

Copyright 2006 by DART AEROSPACE LTD

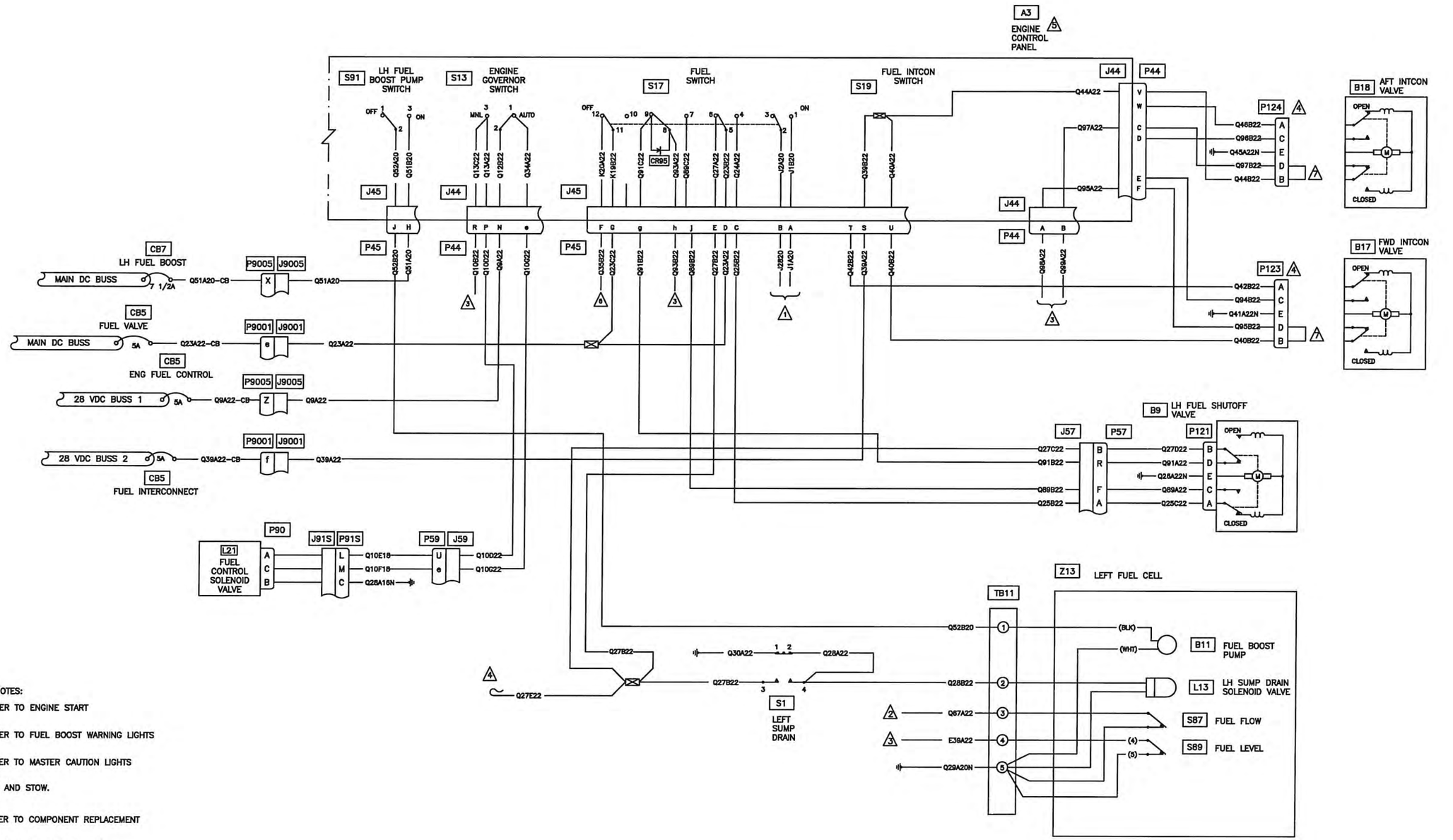

NOTES:

1. REFER TO ENGINE START
2. REFER TO FUEL BOOST WARNING LIGHTS
3. REFER TO MASTER CAUTION LIGHTS
4. CAP AND STOW.
5. REFER TO COMPONENT REPLACEMENT
6. REFER TO RH FUEL SYSTEM
7. INSERT JUMPER TO PREVENT MASTER CAUTION SEGMENT FROM ILLUMINATING.

Figure 98-30S. LH FUEL SYSTEM

RELEASED
ECN 20-105
2020.04.20

DESIGN	DRAWN BY	DART AEROSPACE LTD HAWKESBURY, ONTARIO, CANADA	
RD	RD		
CHECKED	APPROVED	DRAWING NO.	REV. C
RD	KB	D212-725-2	SHEET 20 OF 57
DATE		TITLE	SCALE
07.05.01		FIGURE 98-30S	NTS

Copyright 2006 by DART AEROSPACE LTD

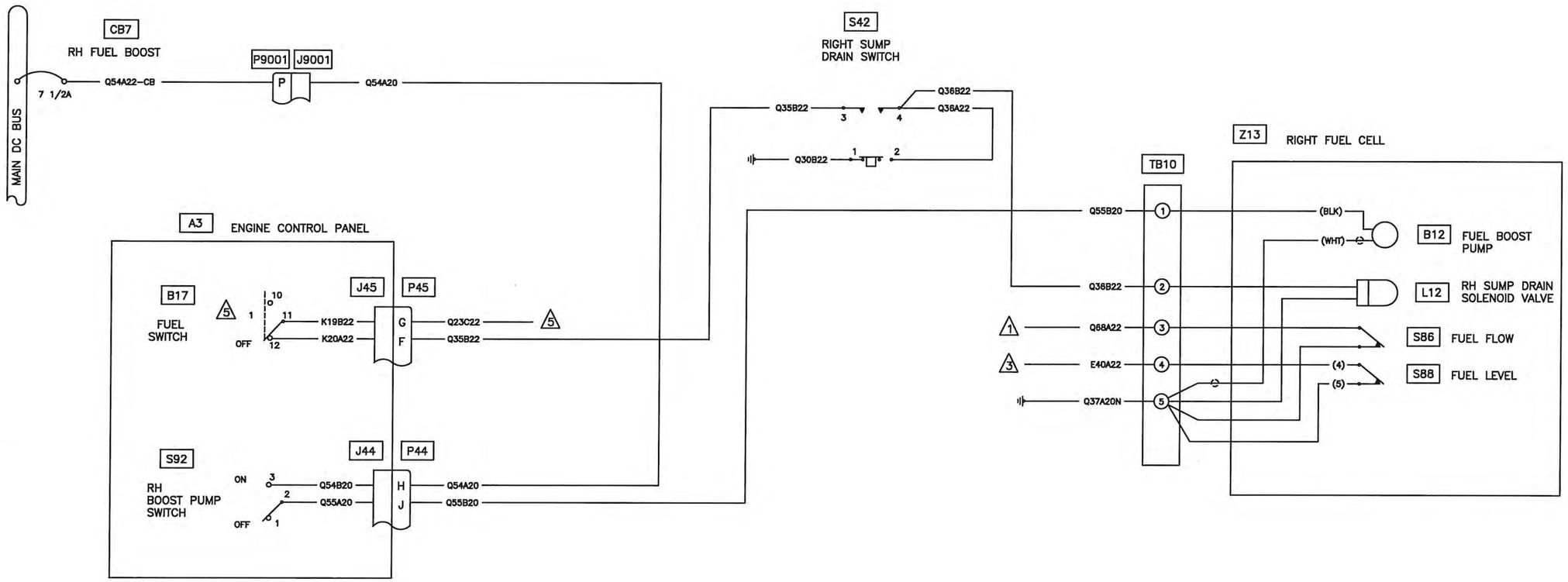

NOTES:

1. REFER TO FUEL BOOST WARNING LIGHTS
2. REFER TO ENGINE START
3. REFER TO MASTER CAUTION LIGHTS
4.
5. REFER TO LH FUEL SYSTEM

Figure 98-31S. RH FUEL SYSTEM

ECN 20-105
2020.04.20

DESIGN: RD	DRAWN BY: RD	DART AEROSPACE LTD, HAWKESBURY, ONTARIO, CANADA	
CHECKED: RD	APPROVED: KB	DRAWING NO.: D212-725-2	REV. B
DATE: 07.01.30		TITLE: FIGURE 98-31S	SHEET 21 OF 57, SCALE: NTS

Copyright 2006 by DART AEROSPACE LTD

ENGINE CONTROL PANEL MODIFICATION

1. REMOVE GOVERNOR #1 SWITCH AND WIRING.
2. REMOVE PARTICLE SEPARATOR #2 SWITCH AND WIRING.
3. REMOVED RH FUEL VALVE SWITCH AND WIRING.
4. REMOVE FUEL X–FEED SWITCH AND WIRING. REMOVE DIDODES FROM TB4 AND REMOVE RELAY.
5. REMOVE FUEL X–FEED TEST SWITCH AND WIRING.
6. MOVE LH FUEL VALVE SWITCH TO CENTER POSITION WHERE TEST SWITCH WAS.

GOVERNOR #2 SWITCH WIRING CHANGE

1. REMOVED WIRE Q34A22N FROM '1'
2. REMOVE DIODE FROM BETWEEN '1' & '2'
3. MOVE WIRES Q13C22 & Q13A22 FROM '2' TO '3'
4. MOVE WIRE Q12B22 FROM '3' TO '2'
5. ADD WIRE Q34A22 FROM '1' TO J44, PIN e.

FUEL VALVE SWITCH WIRING CHANGE

1. REMOVE WIRE K20A22 FROM 'NO' POSITION ON SECTION 1 OF SWITCH AND MOVE TO 'NC' POSITION. LEAVE WIRE IN J45, PIN F.

FUEL BOOST MASTER CAUTION WIRING CHANGE

1. REMOVE Q67B22 FROM TERMINAL 8 ON TB4 AND INSTALL ON TERMINAL 7 ALONG WITH Q79B22.
2. REMOVE Q68B22 FROM TERMINAL 5 ON TB4 AND INSTALL ON TERMINAL 4 ALONG WITH Q80B22.

ENGINE DE–ICE SWITCH WIRING CHANGE

1. INSTALL SWITCH (MS24523–22) IN OLD GOVERNOR #1 POSITION.
2. ADD WIRE H60C16 FROM '2' ON SWITCH TO J45, PIN L.
3. ADD WIRE H61C16 FROM '3' ON SWITCH TO J45, PIN M.

△7 START FUEL SWITCH (POST S.T.C.)

1. REMOVE WIRES K31D22, K50B22, AND K10A22 FROM SWITCH. CAP AND STOW WIRES.

FUEL INTCON SWITCH WIRING CHANGE

1. REMOVE EXISTING FUEL INTCON SWITCH.
2. INSTALL WIRES AS PER DIAGRAM.

A3

ENGINE CONTROL PANEL (MODIFIED)

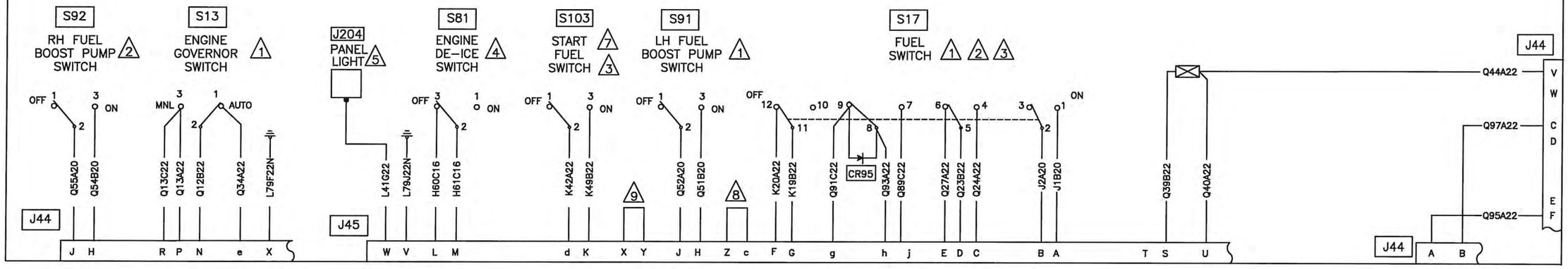

NOTES:

△1 REFER TO WIRING DIAGRAM 98–30

△2 REFER TO WIRING DIAGRAM 98–31

△3 REFER TO WIRING DIAGRAM 98–14

△4 REFER TO WIRING DIAGRAM 98–65

△5 REFER TO WIRING DIAGRAM 98–39

△6

△7 SWITCH INSTALLED AS PER START FUEL STC.

△8 REFER TO WIRING DIAGRAM 98–38, Sheet 1

△9 REFER TO WIRING DIAGRAM 98–38, Sheet 3

FIG. 98–32S ENGINE CONTROL PANEL(Modified)

ECN 20-105
2020.04.20

DESIGN: RD	DRAWN BY: RD	DART AEROSPACE LTD, HAWKESBURY, ONTARIO, CANADA	
CHECKED: RD	APPROVED: KB	DRAWING NO.: D212–725–2	REV. C
DATE: 07.05.01		TITLE: FIGURE 98–32S	SHEET 22 OF 57 SCALE: NTS

Copyright 2006 by DART AEROSPACE LTD

NOTES:

1. REFER TO ENGINE INSTRUMENT LIGHTS

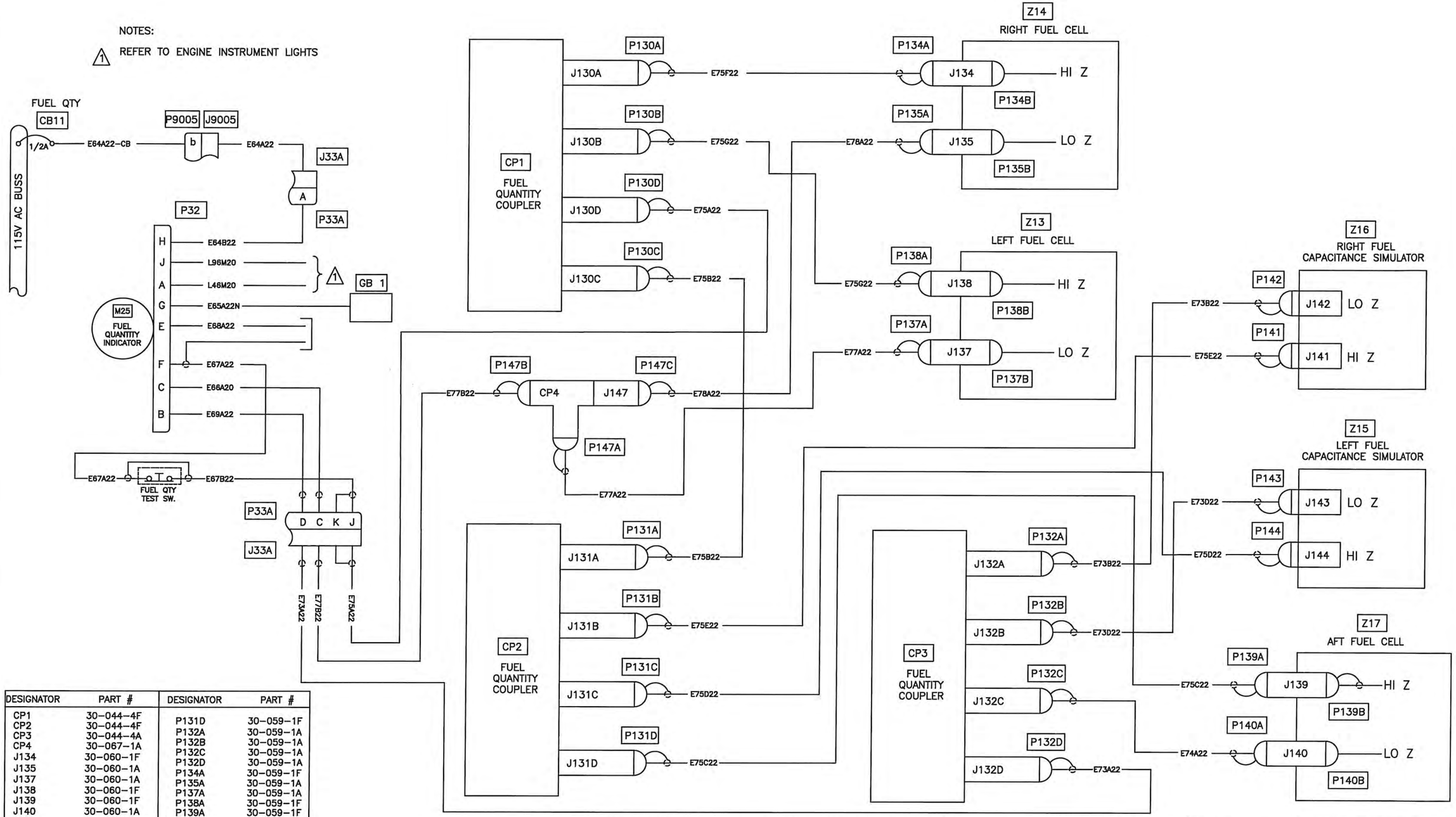

DESIGNATOR	PART #	DESIGNATOR	PART #
CP1	30-044-4F	P131D	30-059-1F
CP2	30-044-4F	P132A	30-059-1A
CP3	30-044-4A	P132B	30-059-1A
CP4	30-067-1A	P132C	30-059-1A
J134	30-060-1F	P132D	30-059-1A
J135	30-060-1A	P134A	30-059-1F
J137	30-060-1A	P135A	30-059-1A
J138	30-060-1F	P137A	30-059-1A
J139	30-060-1F	P138A	30-059-1F
J140	30-060-1A	P139A	30-059-1F
J147	30-060-1A	P140A	30-059-1A
P130A	30-059-1F	P141	30-059-1F
P130B	30-059-1F	P142	30-059-1A
P130C	30-059-1F	P143	30-059-1A
P130D	30-059-1F	P144	30-059-1F
P131A	30-059-1F	P147A	30-059-1A
P131B	30-059-1F	P147B	30-059-1A
P131C	30-059-1F	P147C	30-059-1A

Figure 98-33S. FUEL QUANTITY INDICATION SYSTEM

ECN 20-105
2020.09.20

DESIGN	DRAWN BY	DART AEROSPACE LTD HAWKESBURY, ONTARIO, CANADA	
RD	RD		
CHECKED	APPROVED	DRAWING NO.	REV. C
RD	KB	D212-725-2	SHEET 23 OF 57
DATE		TITLE	SCALE
09.14.07		FIGURE 98-33S	NTS

Copyright 2007 by DART AEROSPACE LTD

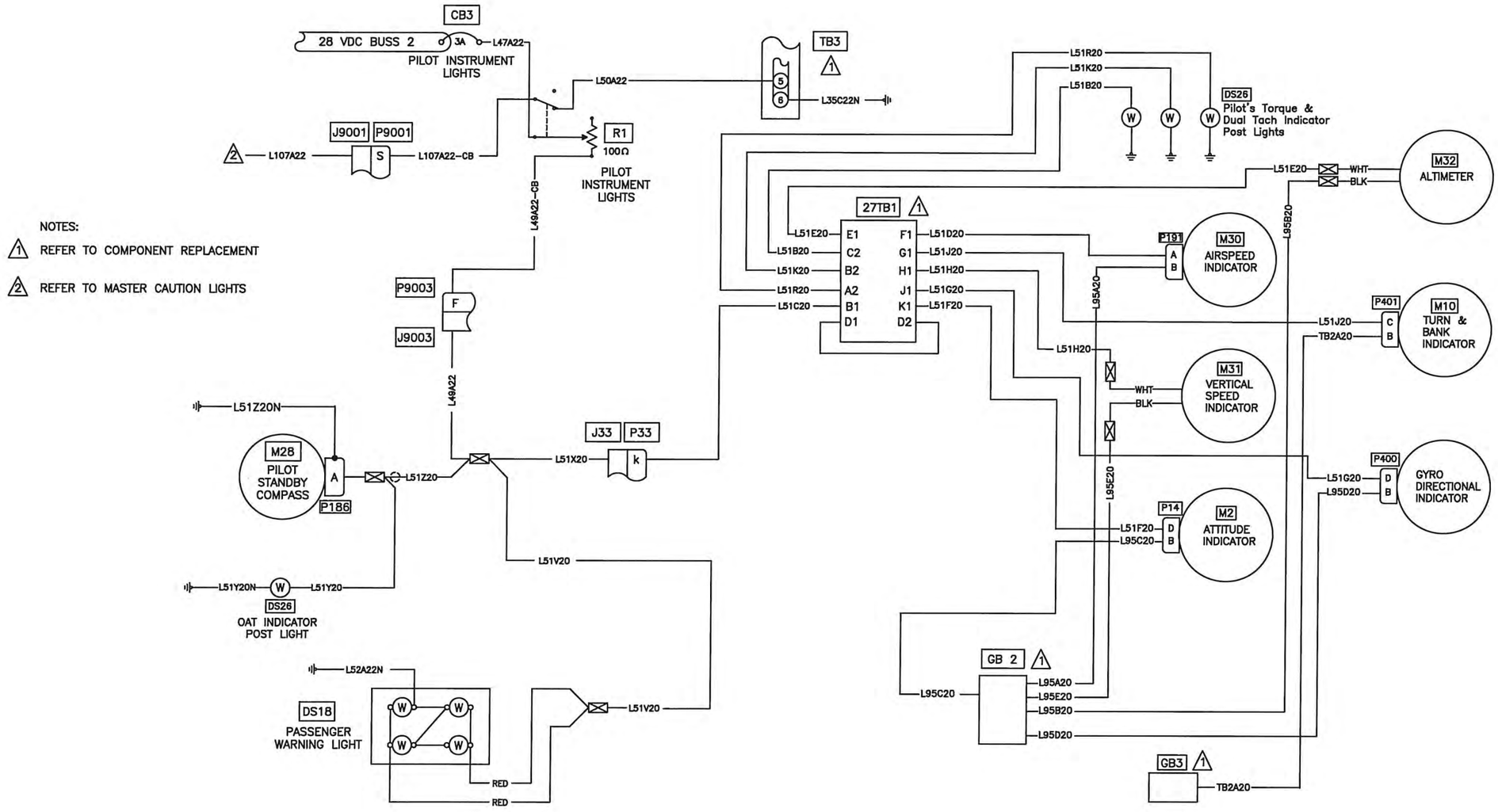

Figure 98–34S. PILOT INSTRUMENT LIGHTS

ECN20-105
2020.04.20

DESIGN	DRAWN BY	DART AEROSPACE LTD HAWKESBURY, ONTARIO, CANADA	
RD	RD		
CHECKED	APPROVED	DRAWING NO.	REV. C
RD	KB	D212–725–2	SHEET 24 OF 57
DATE		TITLE	SCALE
07.05.01		FIGURE 98–34S	NTS

Copyright 2006 by DART AEROSPACE LTD

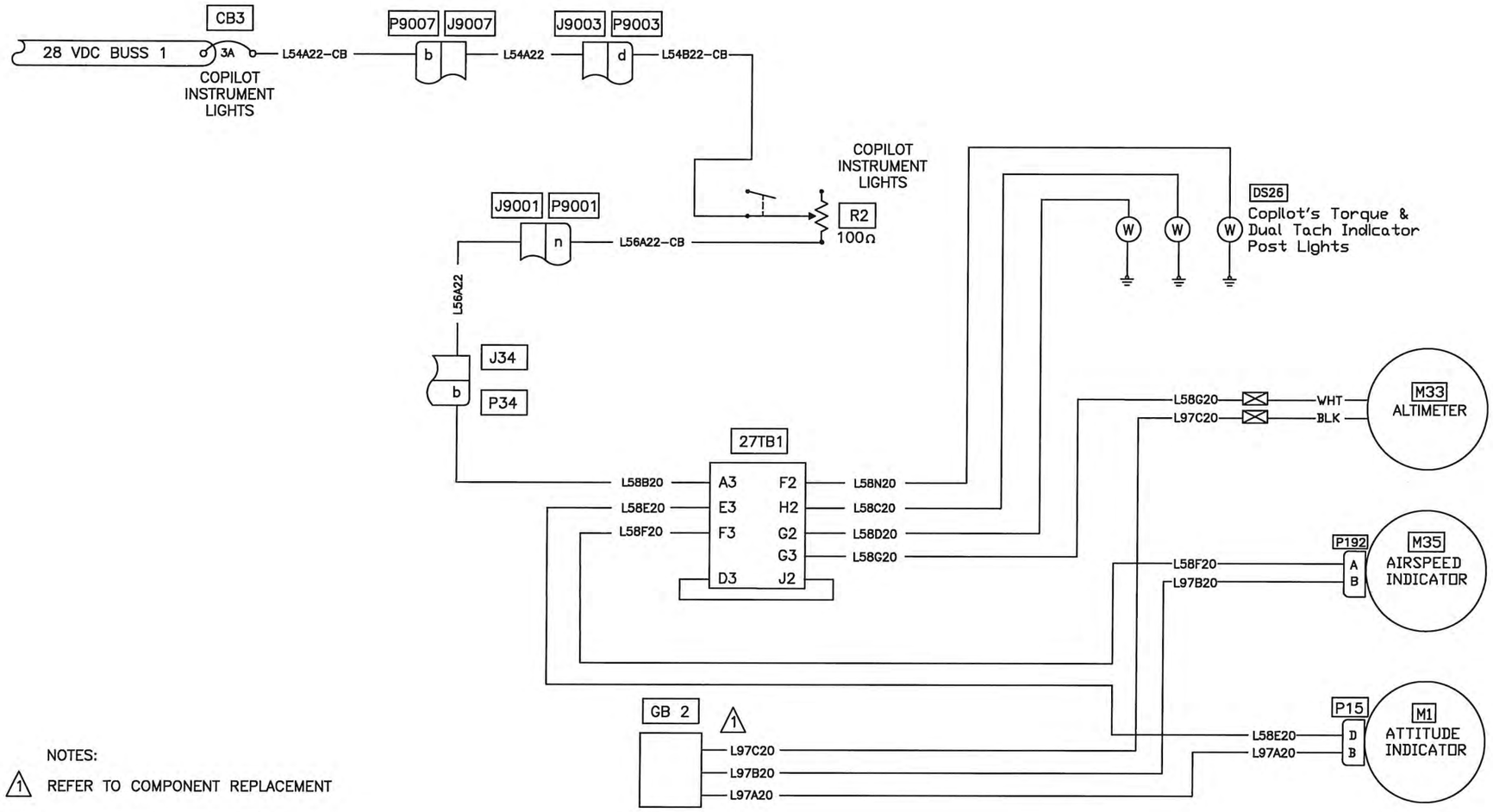

NOTES:

1. REFER TO COMPONENT REPLACEMENT

Figure 98-35S. COPILOT INSTRUMENT LIGHTS

RELEASED
ECN 20-105
2020.04.20

DESIGN: RD	DRAWN BY: RD	DART AEROSPACE LTD, HAWKESBURY, ONTARIO, CANADA	
CHECKED: RD	APPROVED: KB	DRAWING NO.: D212-725-2	REV. C
DATE: 7.05.01	TITLE: FIGURE 98-35S		SHEET 25 OF 57
			SCALE: NTS

Copyright 2006 by DART AEROSPACE LTD

NOTES:

1. REFER TO COMPONENT REPLACEMENT
2.

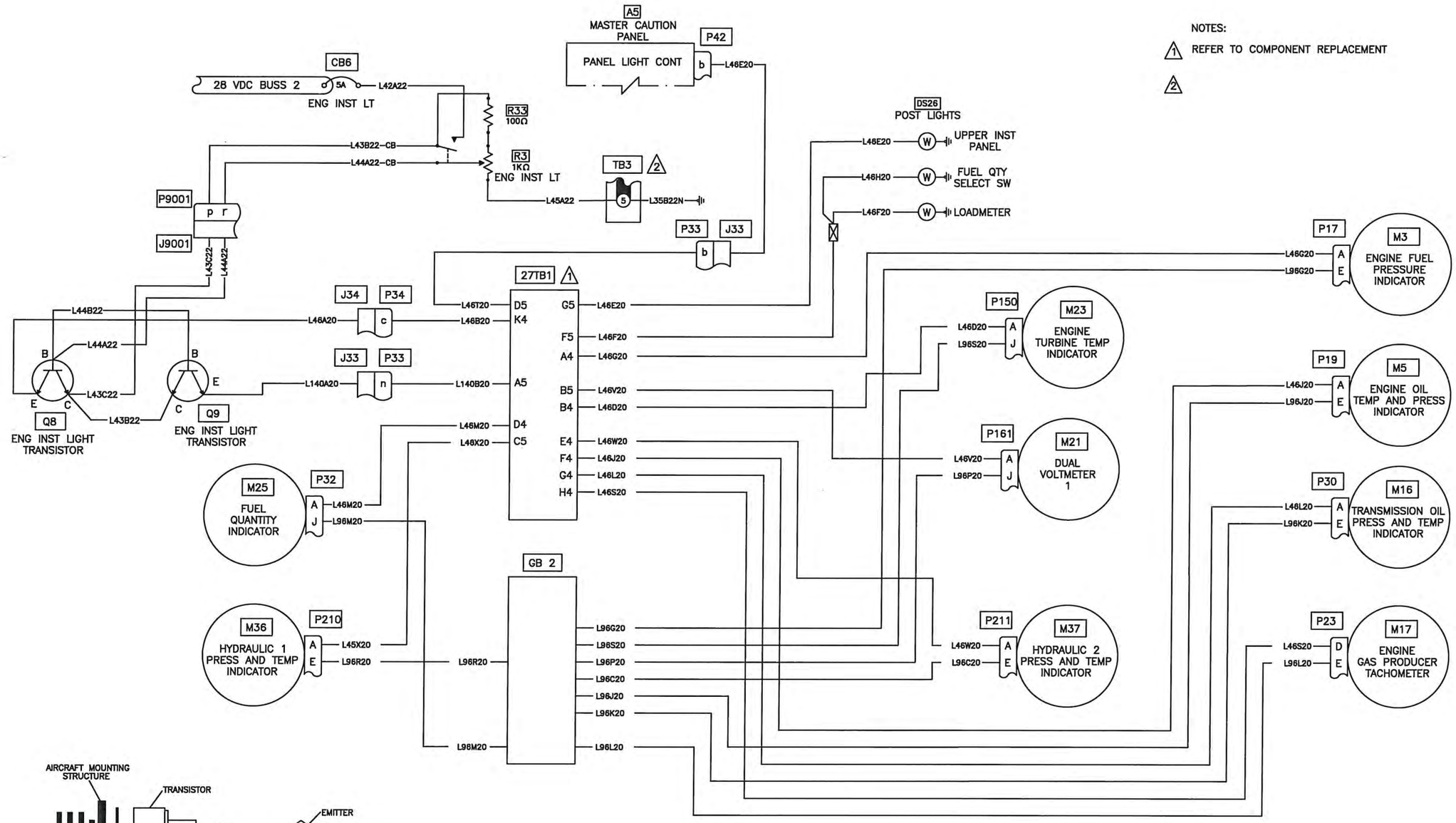

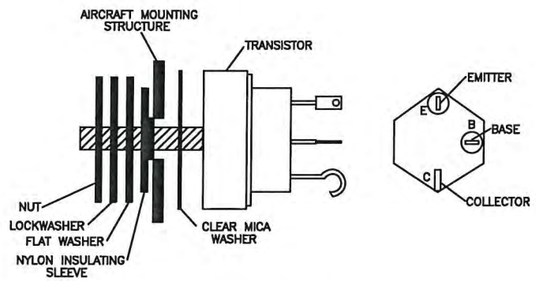

TRANSISTOR INSTALLATION STACK UP

Figure 98–36S. ENGINE INSTRUMENT LIGHTS

ECN 20-105
2020.04.20

DESIGN	DRAWN BY	DART AEROSPACE LTD HAWKESBURY, ONTARIO, CANADA	
RD	RD		
CHECKED	APPROVED	DRAWING NO.	REV. C
RD		D212–725–2	SHEET 26 OF 57
DATE		TITLE	SCALE
07.05.01		FIGURE 98–36S	NTS

Copyright 2006 by DART AEROSPACE LTD

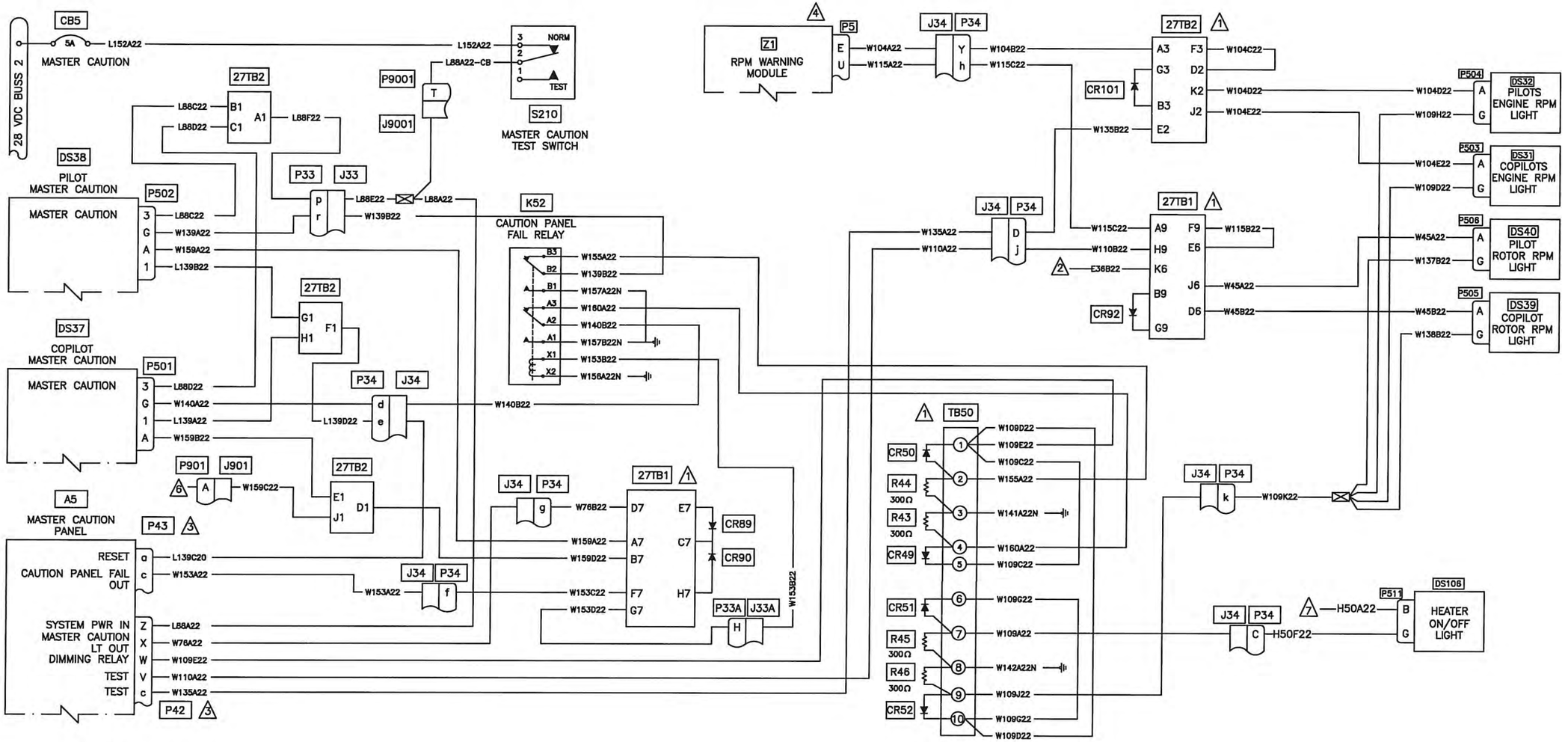

NOTES:

1. REFER TO COMPONENT REPLACEMENT
2. REFER TO HOURMETER
3. REFER TO MASTER CAUTION LIGHTS 98–38, SHEET 3
4. REFER TO RPM LIMIT WARNING
5. REFER TO FLIGHT DATA RECORDER
6. REFER TO VERTICAL REFERENCE DOOR WIRING DIAGRAM IF DOOR INSTALLED
7. REFER TO HEATER SYSTEM DIAGRAM

Figure 98–37S. MASTER CAUTION AND RPM CAUTION LIGHTS

ECN20-105
2020.04.20

DESIGN	DRAWN BY	DART AEROSPACE LTD HAWKESBURY, ONTARIO, CANADA	
RD	RD		
CHECKED	APPROVED	DRAWING NO.	REV. C
RD		D212–725–2	SHEET 27 OF 57
DATE		TITLE	SCALE
07.05.01		FIGURE 98–37S	NTS

Copyright 2006 by DART AEROSPACE LTD

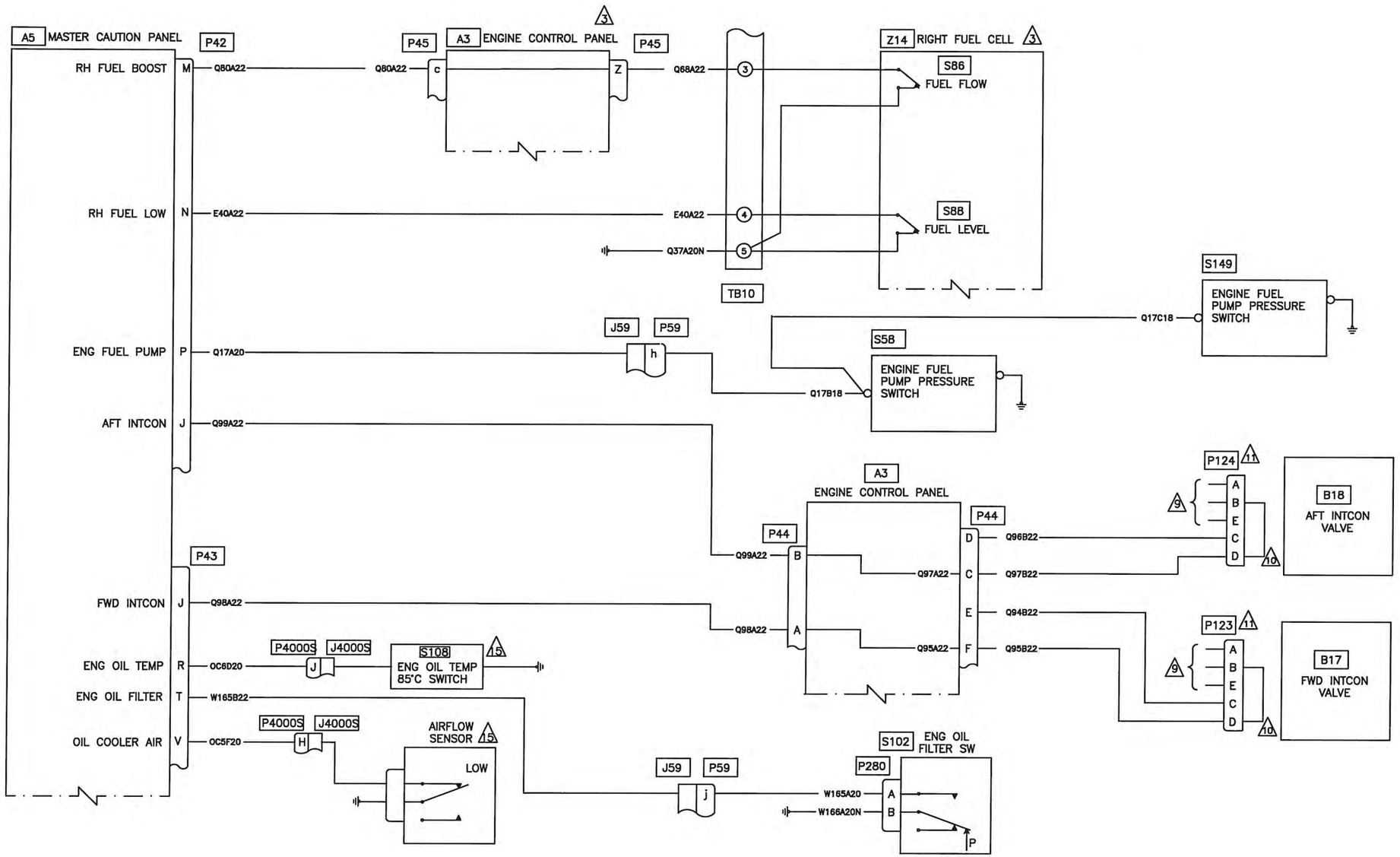

Figure 98–38S. MASTER CAUTION LIGHTS (Sheet 1 of 5)

ECN 20-105
2020.04.20

DESIGN	DRAWN BY	DART AEROSPACE LTD HAWKESBURY, ONTARIO, CANADA	
RD	RD		
CHECKED	APPROVED	DRAWING NO.	REV. C
RD	KB	D212–725–2	SHEET 28 OF 57
DATE		TITLE	SCALE
07.05.01		FIGURE 98–38S SHEET 1 OF 5	NTS

Copyright 2006 by DART AEROSPACE LTD

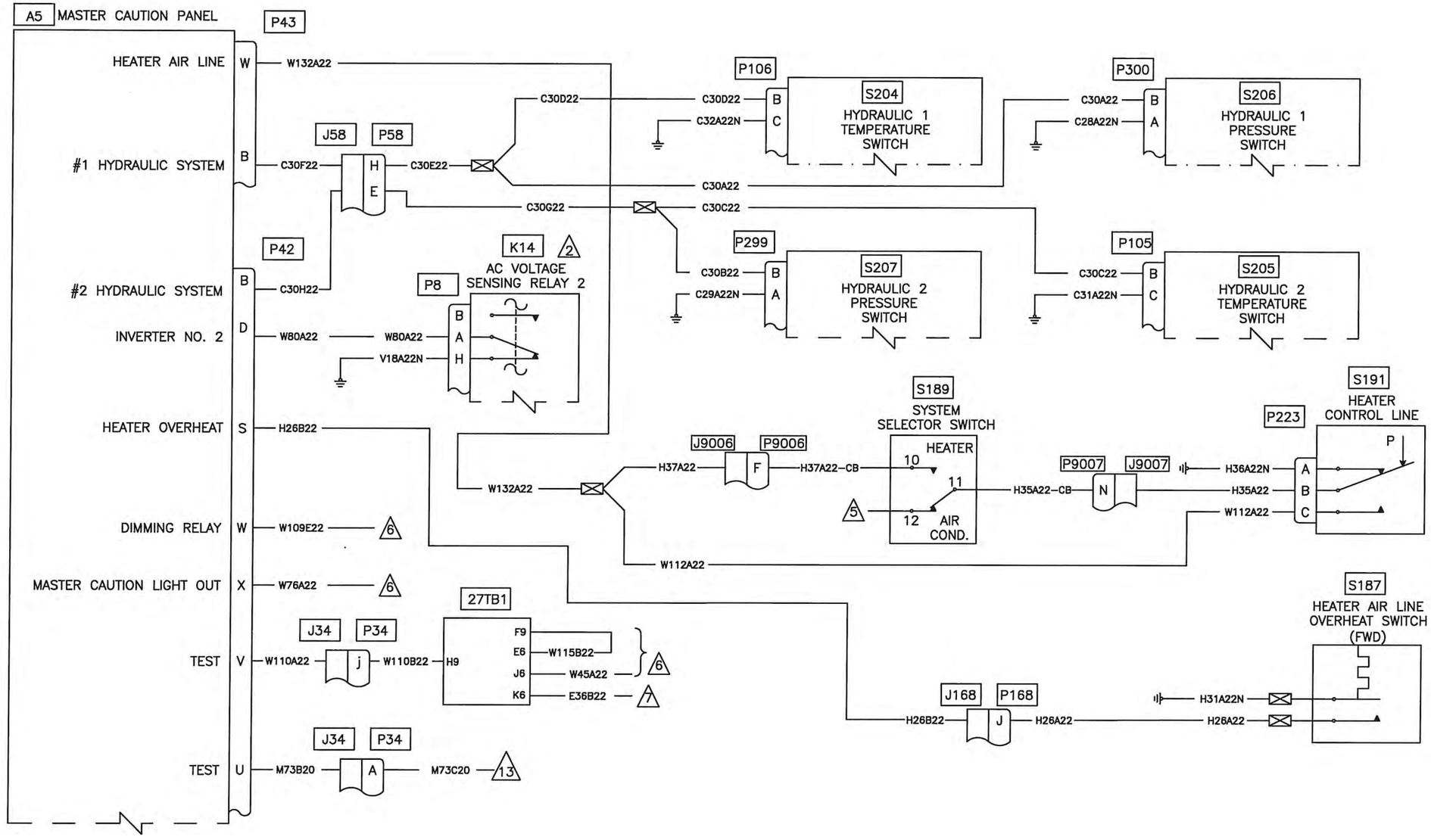

Figure 98–38S. MASTER CAUTION LIGHTS (Sheet 2 of 5)

RELEASED
ECN120-105
2020.04.20

DESIGN: RD	DRAWN BY: RD	DART AEROSPACE LTD, HAWKESBURY, ONTARIO, CANADA	
CHECKED: RD	APPROVED: KB	DRAWING NO.: D212-725-2	REV. C
DATE: 07.05.01		TITLE: FIGURE 98–38S SHEET 2 OF 5	SHEET 29 OF 57, SCALE: NTS

Copyright 2006 by DART AEROSPACE LTD

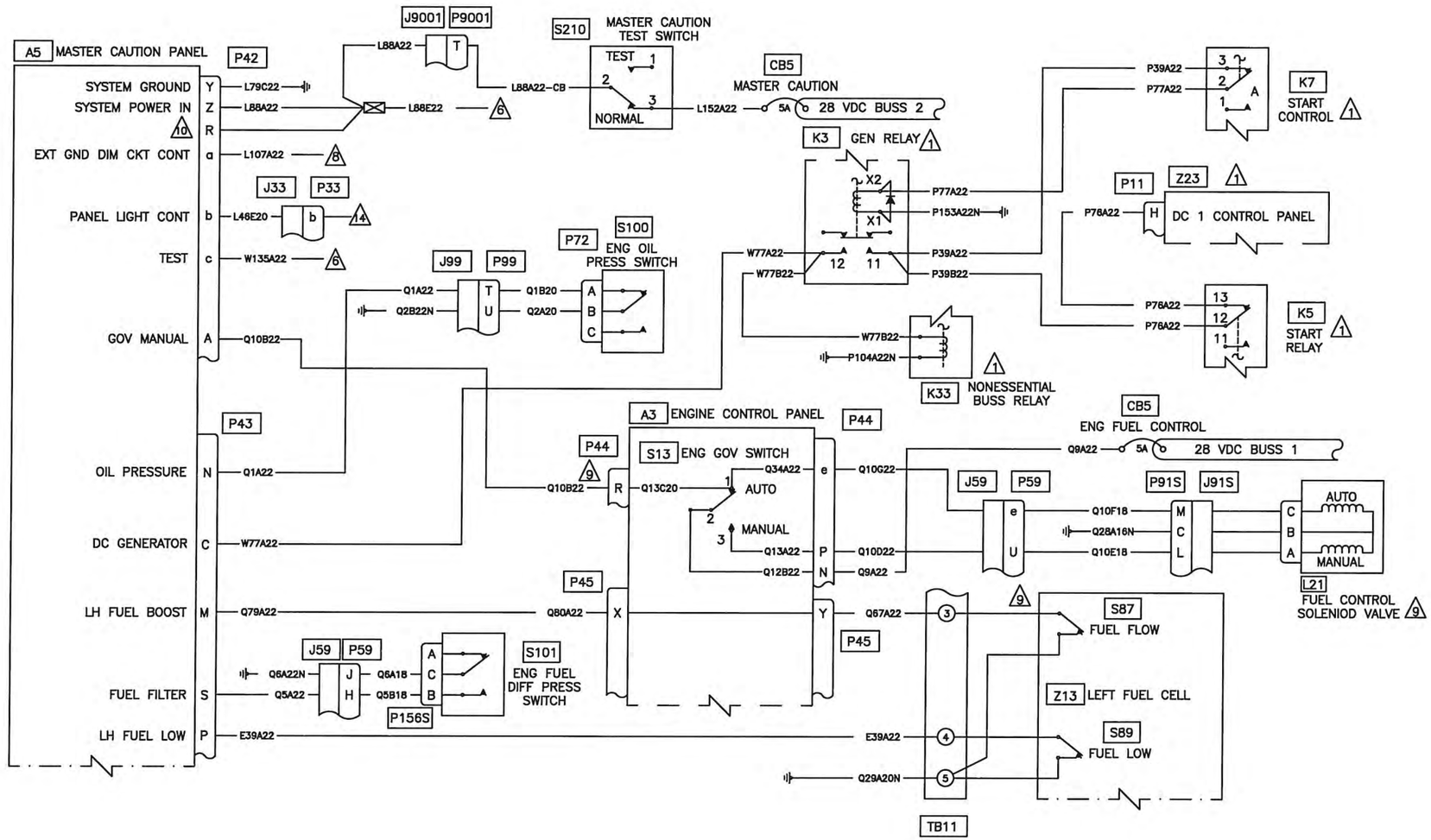

Figure 98–38S. MASTER CAUTION LIGHTS (Sheet 3 of 5)

RELEASED
ECN 20-105
2020.04.20

DESIGN	DRAWN BY	DART AEROSPACE LTD HAWKESBURY, ONTARIO, CANADA	
RD	RD		
CHECKED	APPROVED	DRAWING NO.	REV. C
RD	KB	D212–725–2	SHEET 30 OF 57
DATE		TITLE	SCALE
07.05.01		FIGURE 98–38S SHEET 3 OF 5	NTS

Copyright 2006 by DART AEROSPACE LTD

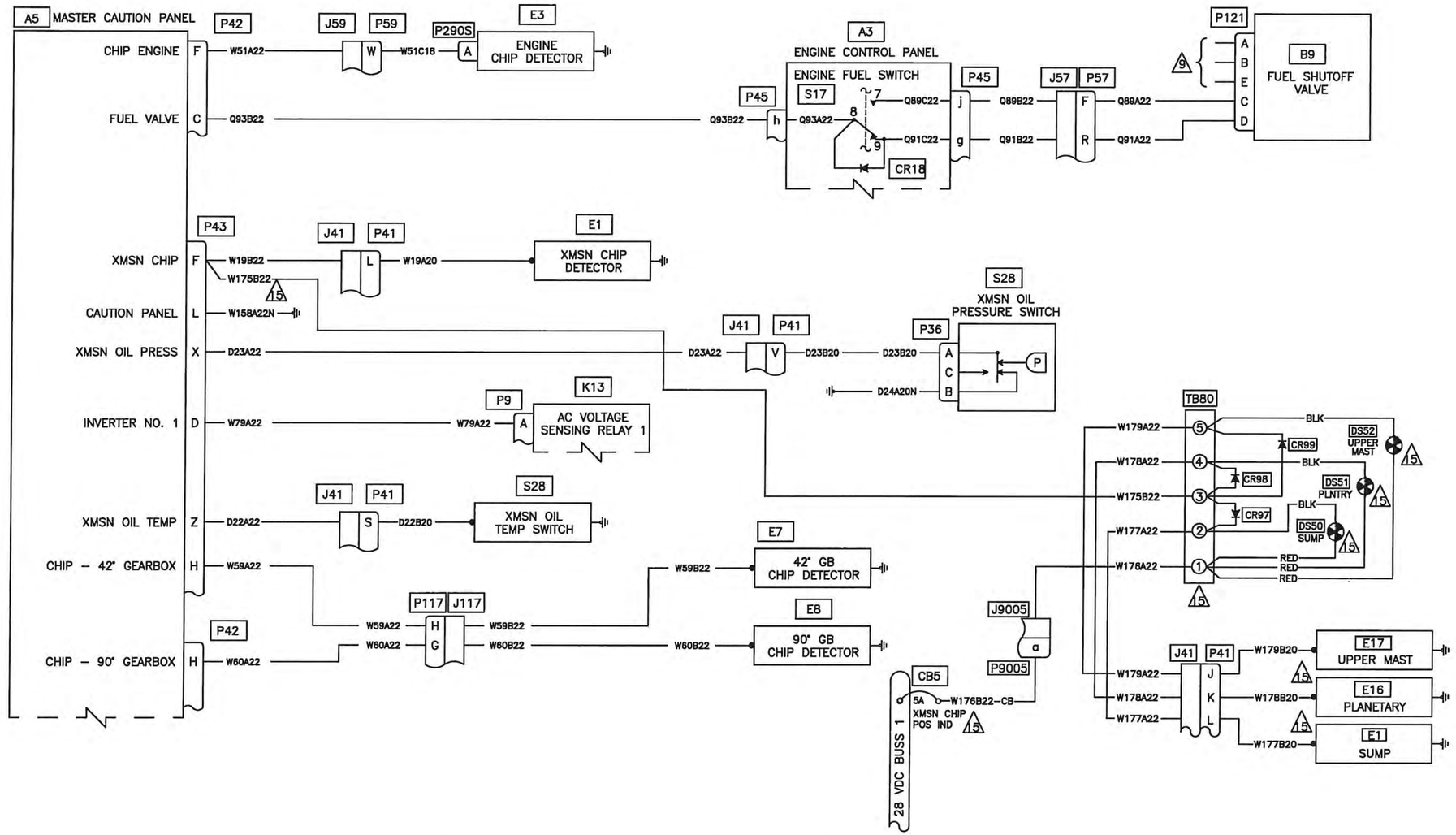

Figure 98–38S. MASTER CAUTION LIGHTS (Sheet 4 of 5)

RELEASED
ECN 20-105
2020.04.20

DESIGN: RD	DRAWN BY: RD	DART AEROSPACE LTD, HAWKESBURY, ONTARIO, CANADA	
CHECKED: RD	APPROVED: KB	DRAWING NO.: D212–725–2	REV. B
DATE: 07.01.30		TITLE: FIGURE 98–38S SHEET 4 OF 5	SCALE: NTS
			SHEET 31 OF 57

Copyright 2006 by DART AEROSPACE LTD

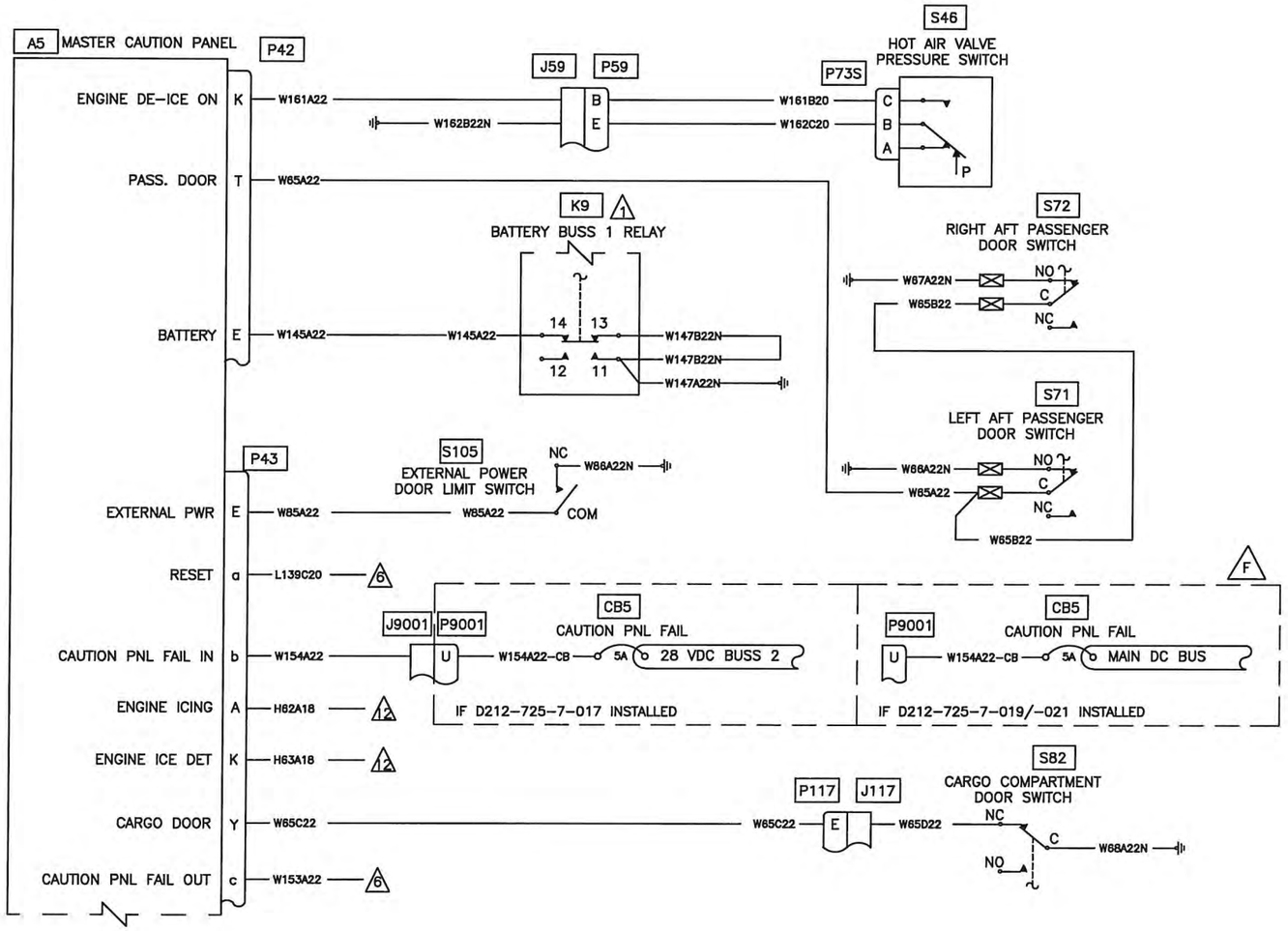

NOTES:

1. REFER TO GENERATOR 1
2. REFER TO AC POWER SYSTEM
3. REFER TO RH FUEL SYSTEM
4. REFER TO FUEL CROSSFEED
5. REFER TO HEATER/AIR CONDITIONING
6. REFER TO MASTER CAUTION AND RPM CAUTION LIGHTS
7. REFER TO HOURMETER
8. REFER TO PILOT INSTRUMENT LIGHTS
9. REFER TO LH FUEL SYSTEM
10. 28VDC INPUT REQUIRED TO TURN LIGHT OFF ON BLANK SEGMENT.
11. CAP AND STOW.
12. REFER TO ENGINE ANTI-ICING
13. REFER TO CARGO RELEASE SYSTEM
14. REFER TO ENGINE INSTRUMENT LIGHTS
15. IF INSTALLED

Figure 98-38S. MASTER CAUTION LIGHTS (Sheet 5 of 5)

RELEASED
ECN 20-105
2020.04.20

DESIGN	DRAWN BY	DART AEROSPACE LTD HAWKESBURY, ONTARIO, CANADA	
RD	WK		
CHECKED	APPROVED	DRAWING NO.	REV. F
KB	KB	D212-725-2	SHEET 32 OF 57
DATE		TITLE	SCALE
20.03.20		FIGURE 98-38S SHEET 5 OF 5	NTS

Copyright 2006 by DART AEROSPACE LTD

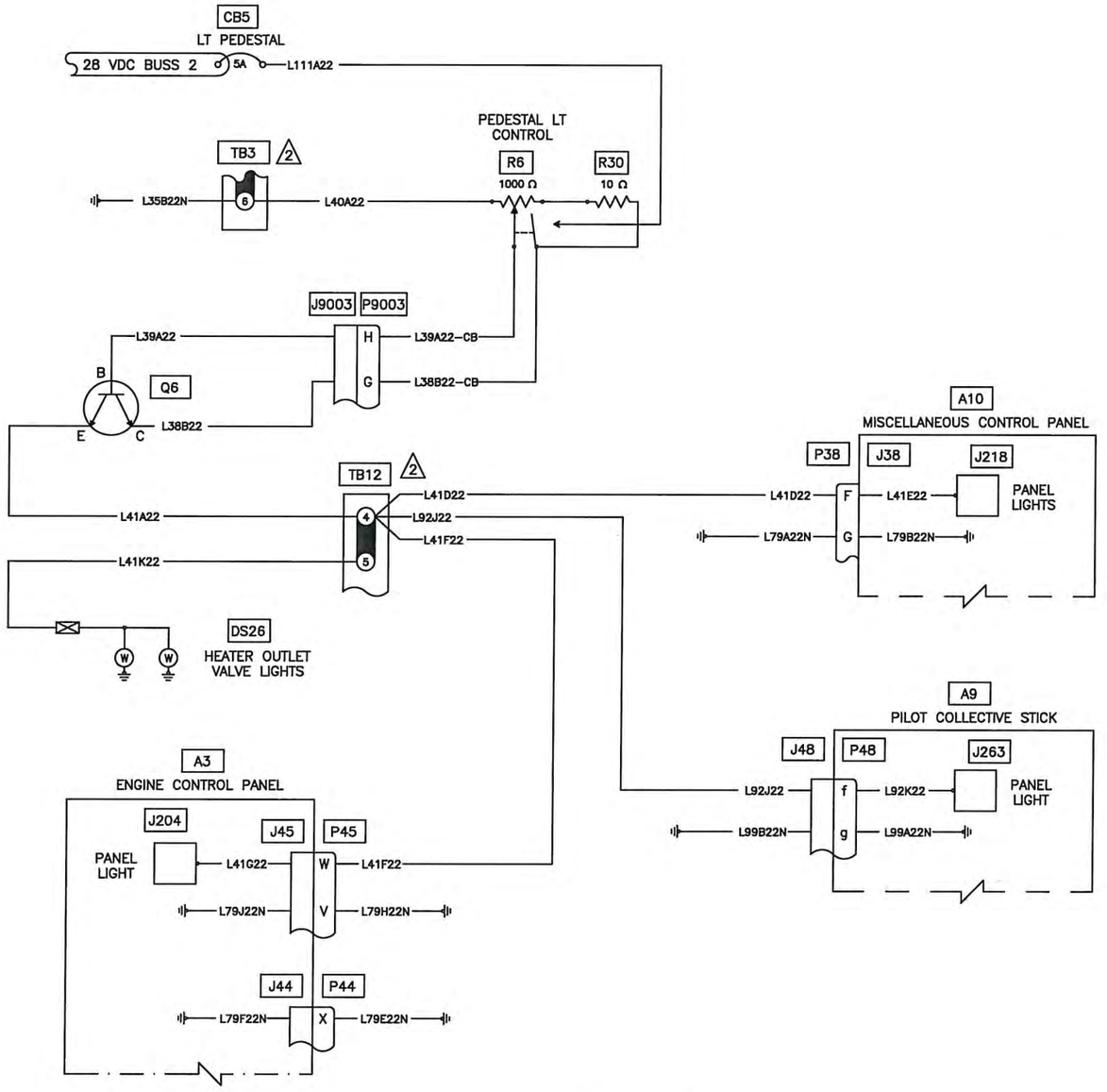

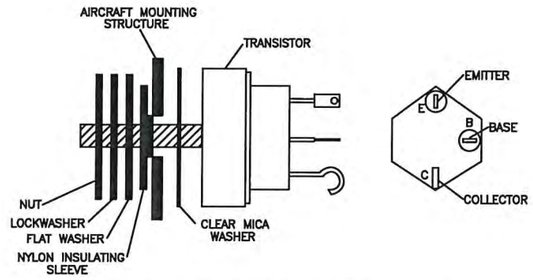

TRANSISTOR INSTALLATION STACK UP

NOTES:

1. REFER TO AFCS POWER LIGHTING
2. REFER TO COMPONENT REPLACEMENT

Figure 98–39S. PEDESTAL LIGHTS

RELEASED
ECN 20-105
2020.04.20

DESIGN: RD	DRAWN BY: RD	DART AEROSPACE LTD, HAWKESBURY, ONTARIO, CANADA	
CHECKED: RD	APPROVED: KB	DRAWING NO.: D212–725–2	REV. B
DATE: 07.01.30		TITLE: FIGURE 98–39S	SHEET 33 OF 57
			SCALE: NTS

Copyright 2006 by DART AEROSPACE LTD

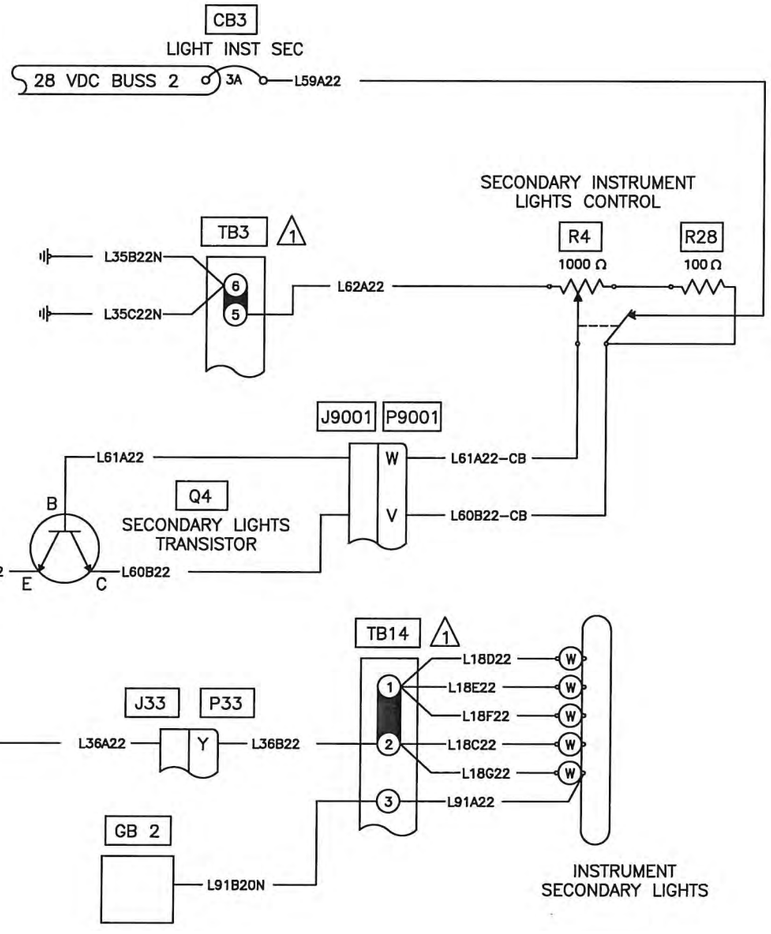

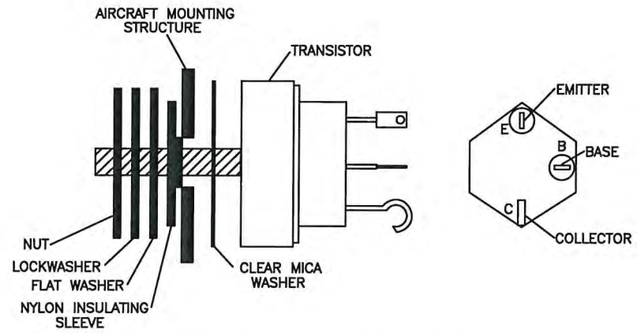

TRANSISTOR INSTALLATION STACK UP

NOTES:

1. REFER TO COMPONENT REPLACEMENT

Figure 98–40S. SECONDARY LIGHTS

RELEASED
ECN 20-105
2020.04.20

DESIGN: RD	DRAWN BY: RD	DART AEROSPACE LTD, HAWKESBURY, ONTARIO, CANADA	
CHECKED: RD	APPROVED: KB	DRAWING NO.: D212–725–2	REV. B
DATE: 07.01.30		TITLE: FIGURE 98–40S	SHEET 34 OF 57
			SCALE: NTS

Copyright 2006 by DART AEROSPACE LTD

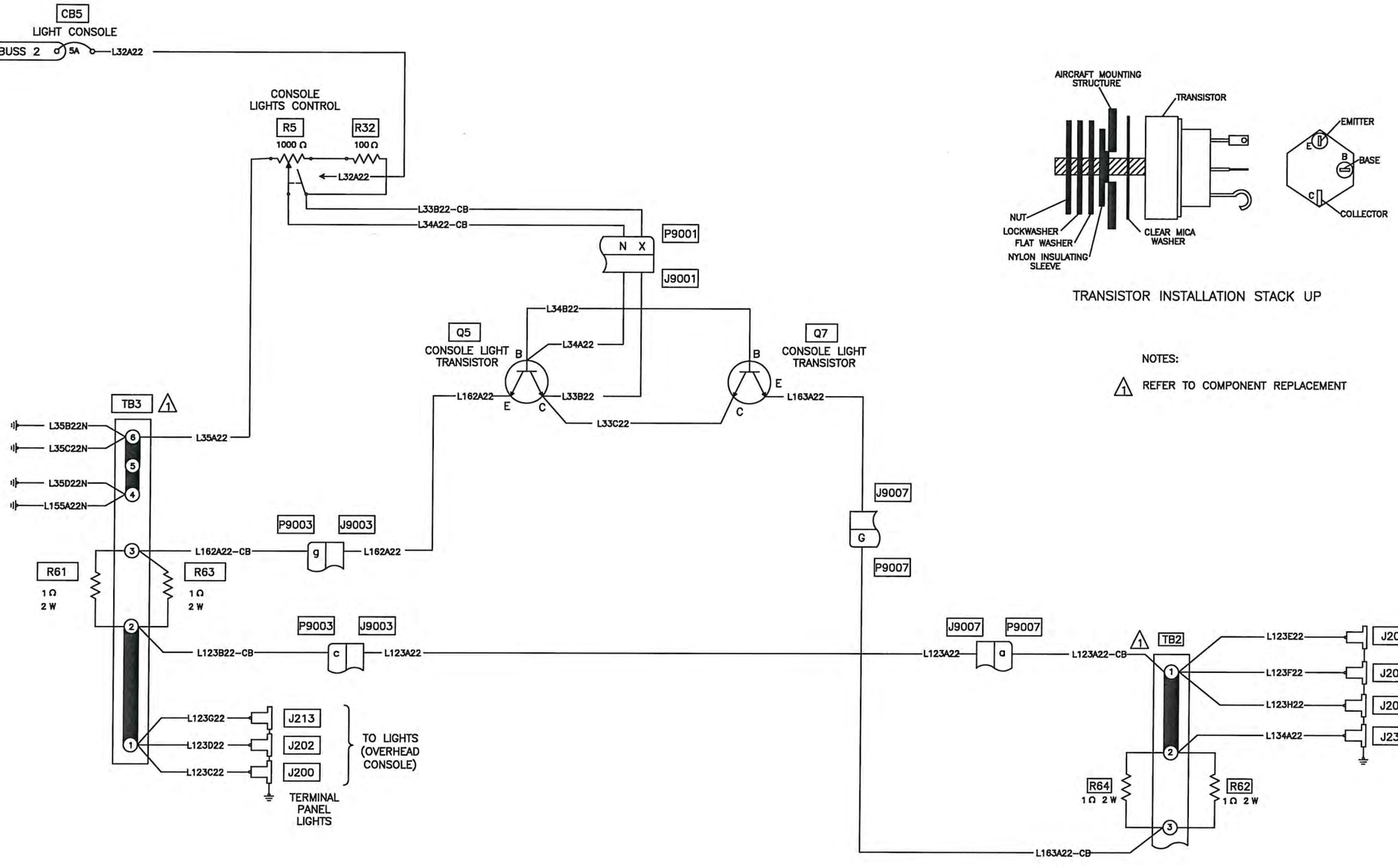

TRANSISTOR INSTALLATION STACK UP

NOTES:

1. REFER TO COMPONENT REPLACEMENT

Figure 98-41S. OVERHEAD LIGHTS

RELEASED
ECN 20-105
2020.04.20

DESIGN: RD	DRAWN BY: RD	DART AEROSPACE LTD, HAWKESBURY, ONTARIO, CANADA	
CHECKED: RD	APPROVED: KB	DRAWING NO.: D212-725-2	REV. B
DATE: 07.01.30		TITLE: FIGURE 98-41S	SCALE: NTS
			SHEET 35 OF 57

Copyright 2006 by DART AEROSPACE LTD

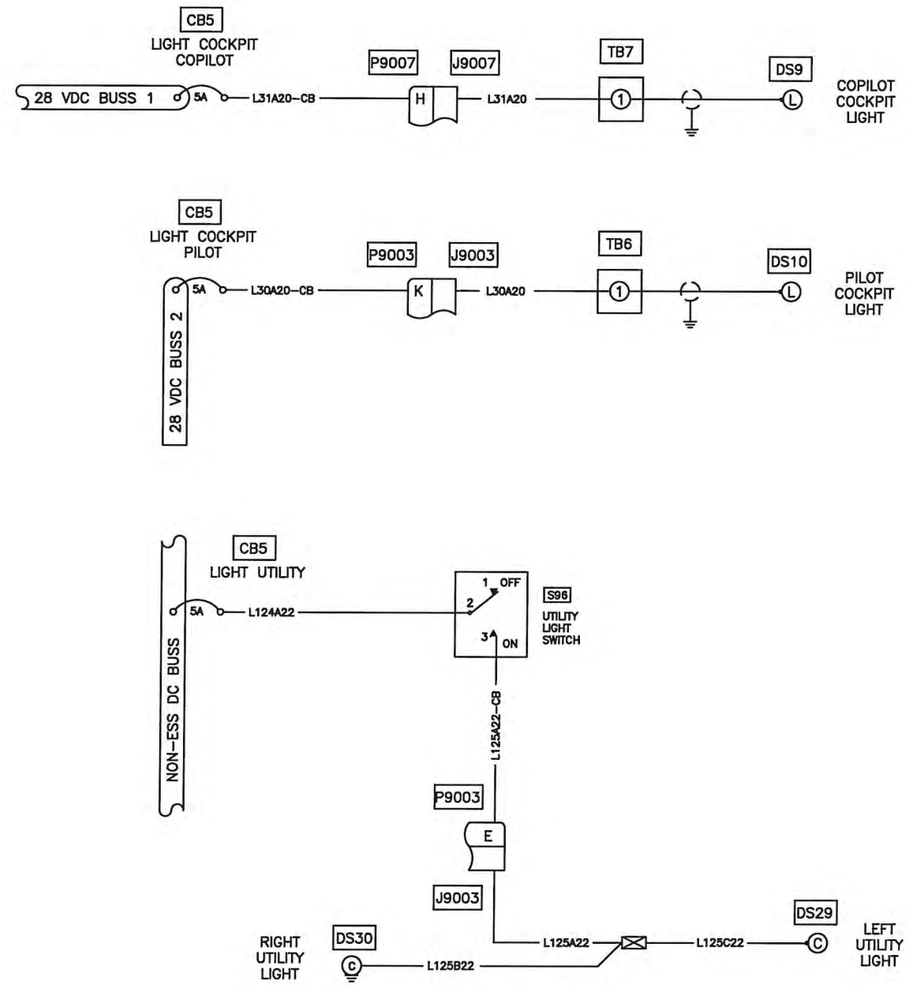

Figure 98–42S. COCKPIT AND UTILITY LIGHTS

RELEASED
ECN 20-105
2020.04.20

DESIGN RD	DRAWN BY RD	DART AEROSPACE LTD HAWKESBURY, ONTARIO, CANADA	
CHECKED RD	APPROVED KB	DRAWING NO. D212–725–2	REV. B SHEET 36 OF 57
DATE 07.01.30		TITLE FIGURE 98–42S	SCALE NTS

Copyright 2006 by DART AEROSPACE LTD

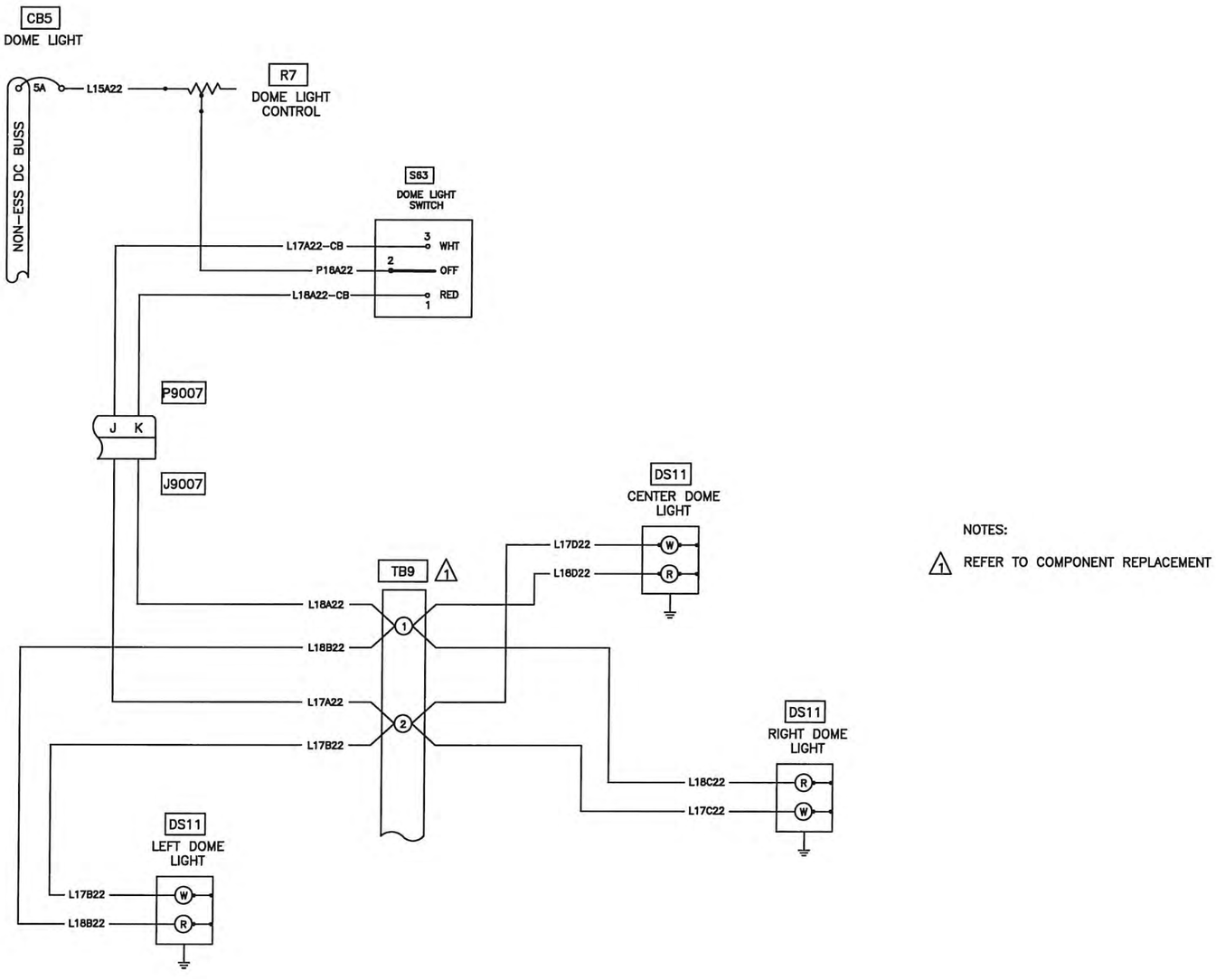

NOTES:

1. REFER TO COMPONENT REPLACEMENT

Figure 98-43S. DOME LIGHTS

RELEASED
ECN 20-105
2020.04.20

DESIGN: RD	DRAWN BY: RD	DART AEROSPACE LTD, HAWKESBURY, ONTARIO, CANADA	
CHECKED: RD	APPROVED: KB	DRAWING NO.: D212-725-2	REV. B
DATE: 07.01.30		TITLE: FIGURE 98-43S	SHEET 37 OF 57, SCALE: NTS

Copyright 2006 by DART AEROSPACE LTD

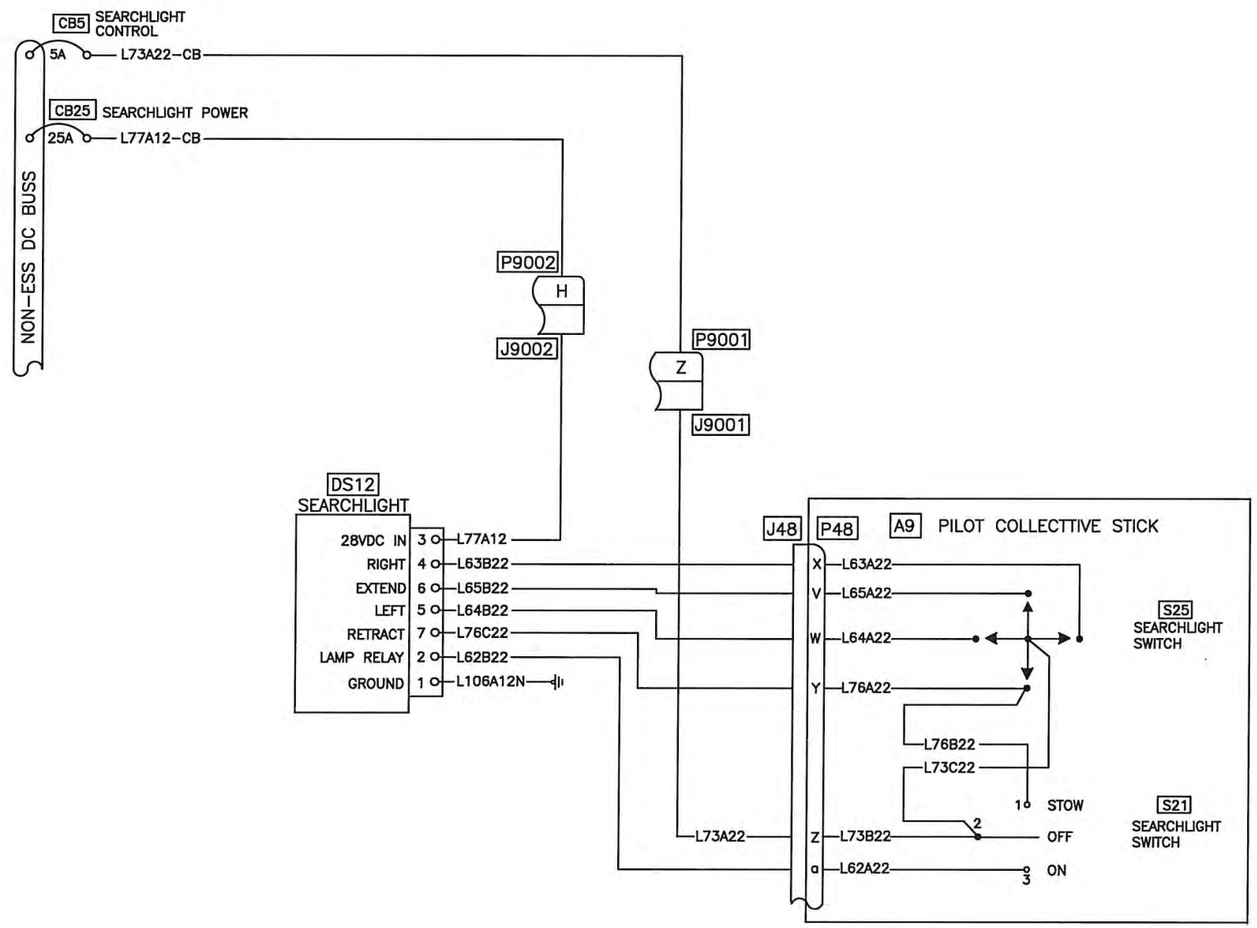

Figure 98-44S. SEARCHLIGHT

RELEASED
ECN 20-105
2020.04.20

DESIGN	DRAWN BY	DART AEROSPACE LTD HAWKESBURY, ONTARIO, CANADA	
RD	RD		
CHECKED	APPROVED	DRAWING NO.	REV. B
RD	KB	D212-725-2	SHEET 38 OF 57
DATE		TITLE	SCALE
07.01.30		FIGURE 98-44S	NTS

Copyright 2006 by DART AEROSPACE LTD

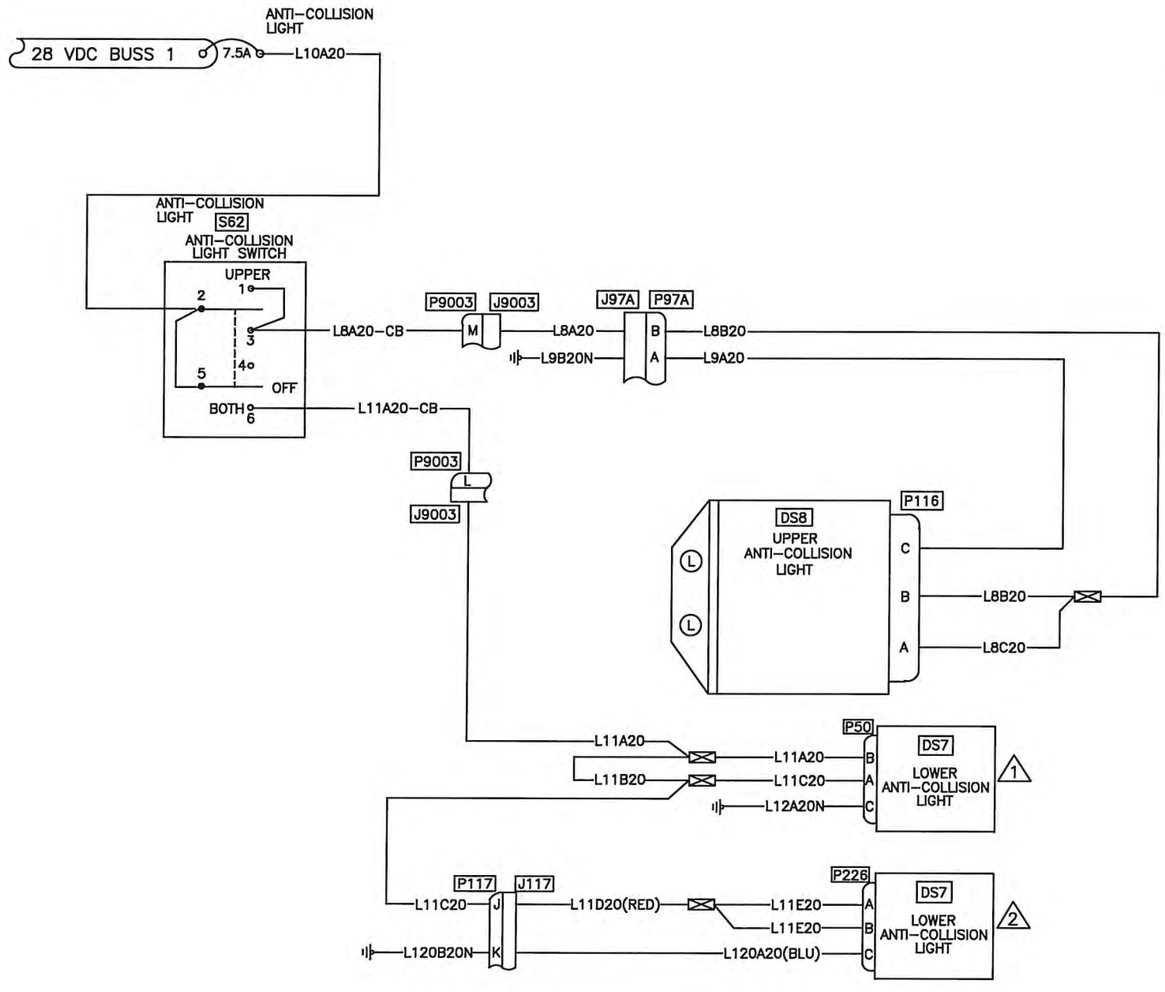

NOTES:

1. LOCATED UNDER CABIN FOR NORMAL INSTALLATION
2. STOWED EXCEPT WHEN FLOATS ARE INSTALLED. LIGHT IS RELOCATED TO TAIL BOOM USING REVISED WIRING SHOWN.

Figure 98–45S. ANTI–COLLISION LIGHTS

RELEASED
ECN20-105
2020.04.20

DESIGN: RD	DRAWN BY: RD	DART AEROSPACE LTD, HAWKESBURY, ONTARIO, CANADA	
CHECKED: RD	APPROVED: KB	DRAWING NO.: D212–725–2	REV. B
DATE: 07.01.30		TITLE: FIGURE 98–45S	SHEET 39 OF 57, SCALE: NTS

Copyright 2006 by DART AEROSPACE LTD

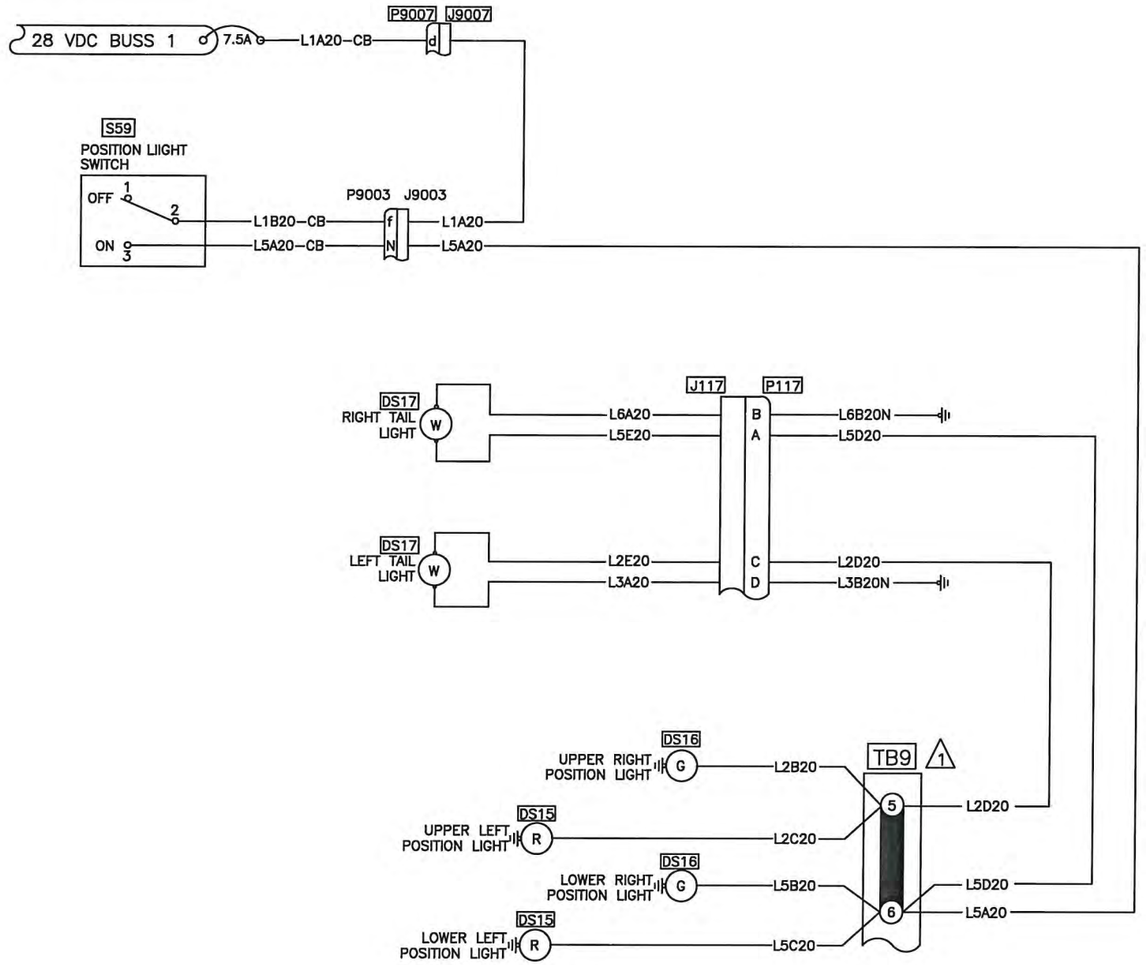

NOTES:

1. REFER TO COMPONENT REPLACEMENT

Figure 98–46S. POSITION LIGHTS

RELEASED
ECN 20-105
2020.04.20

DESIGN	DRAWN BY	DART AEROSPACE LTD HAWKESBURY, ONTARIO, CANADA	
RD	RD		
CHECKED	APPROVED	DRAWING NO.	REV. B
RD	KB	D212–725–2	SHEET 40 OF 57
DATE		TITLE	SCALE
07.01.30		FIGURE 98–46S	NTS

Copyright 2006 by DART AEROSPACE LTD

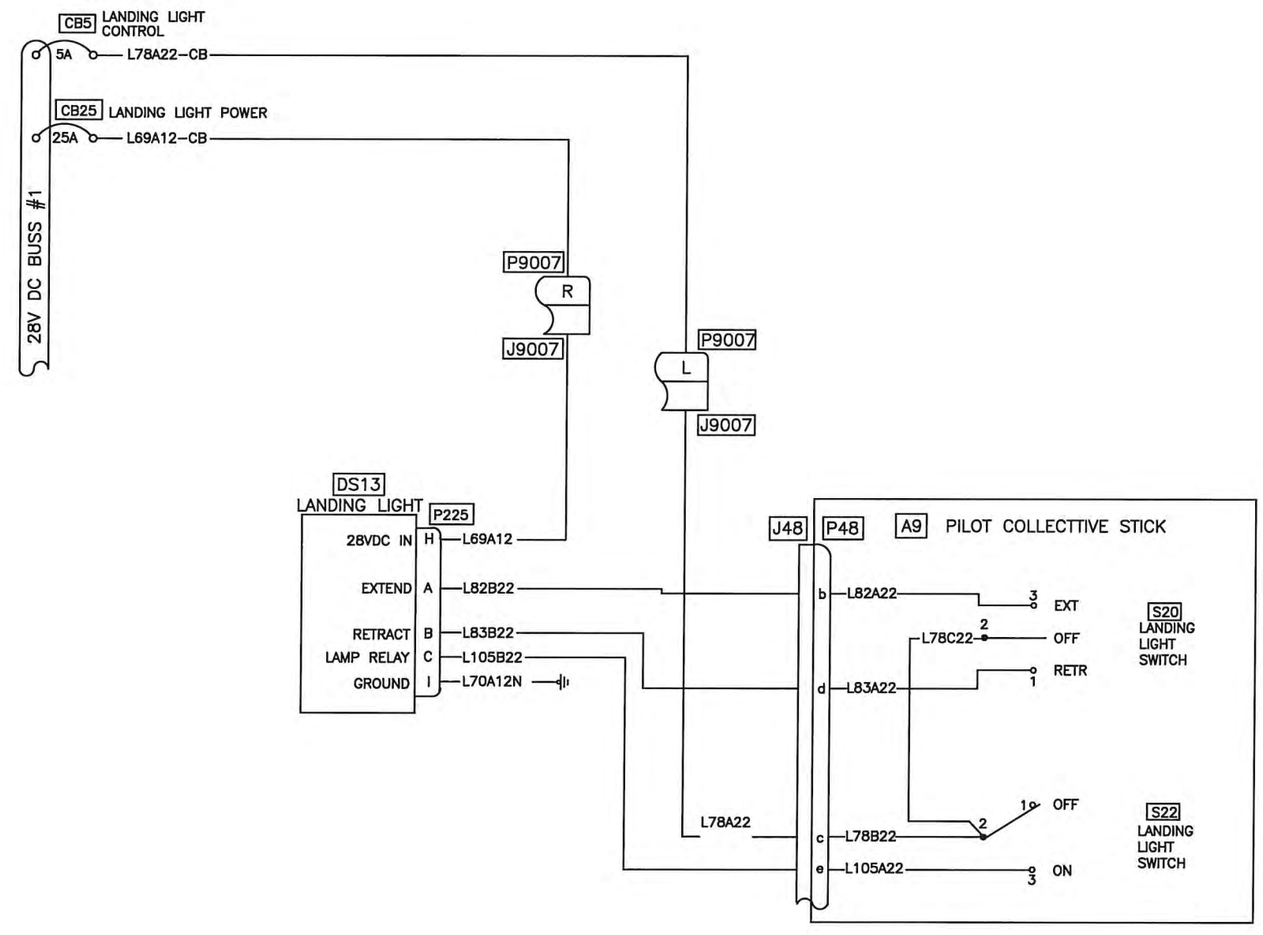

Figure 98–47S. LANDING LIGHTS

RELEASED
ECN 20-105
2020.04.20

DESIGN: RD	DRAWN BY: RD	DART AEROSPACE LTD, HAWKESBURY, ONTARIO, CANADA	
CHECKED: RD	APPROVED: KB	DRAWING NO.: D212–725–2	REV. B
DATE: 07.01.30	TITLE: FIGURE 98–47S		SHEET 41 OF 57
			SCALE: NTS

Copyright 2006 by DART AEROSPACE LTD

NOTES:

1. REFER TO MASTER CAUTION LIGHTS

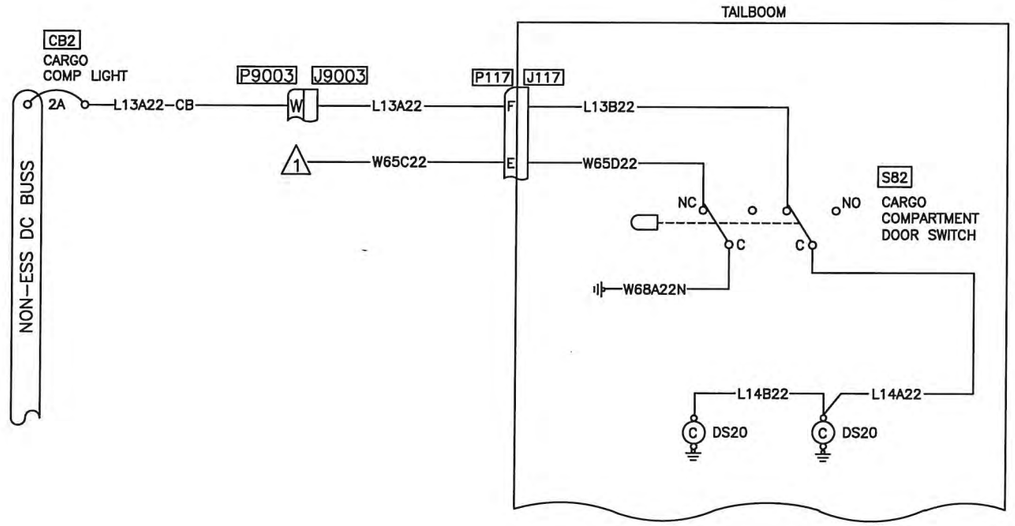

Figure 98-48S. CARGO COMPARTMENT LIGHTS

RELEASED
ECN 20-105
2020.04.20

DESIGN	DRAWN BY	DART AEROSPACE LTD HAWKESBURY, ONTARIO, CANADA	
RD	RD		
CHECKED	APPROVED	DRAWING NO.	REV. C
RD	KB	D212-725-2	SHEET 42 OF 57
DATE		TITLE	SCALE
07.05.01		FIGURE 98-48S	NTS

Copyright 2006 by DART AEROSPACE LTD

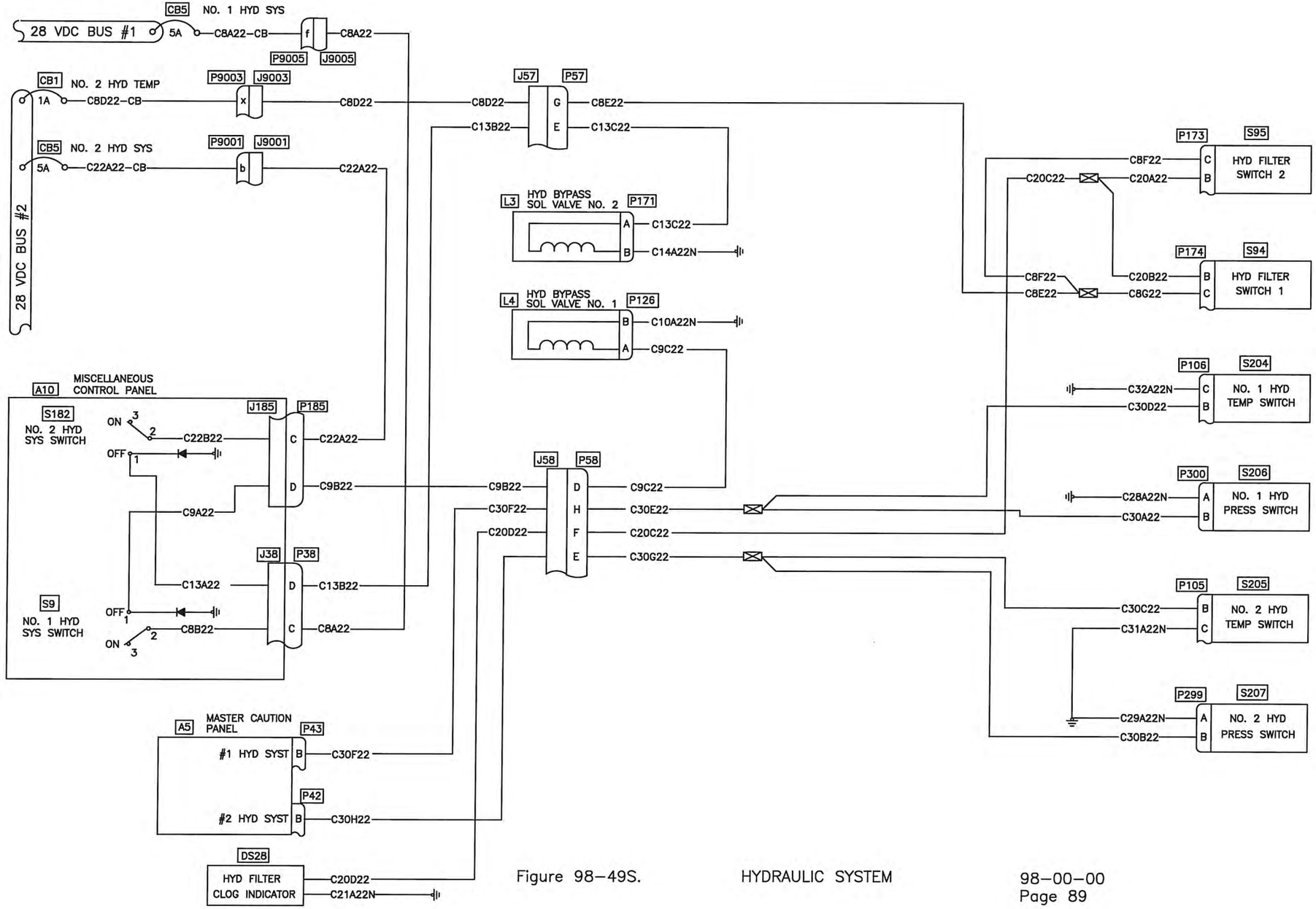

Figure 98–49S. HYDRAULIC SYSTEM

RELEASED
ECN 20-105
2020.04.20

DESIGN	DRAWN BY	DART AEROSPACE LTD HAWKESBURY, ONTARIO, CANADA	
RD	RD		
CHECKED	APPROVED	DRAWING NO.	REV. C
RD	KB	D212–725–2	SHEET 43 OF 57
DATE		TITLE	SCALE
07.05.01		FIGURE 98–49S	NTS

Copyright 2006 by DART AEROSPACE LTD

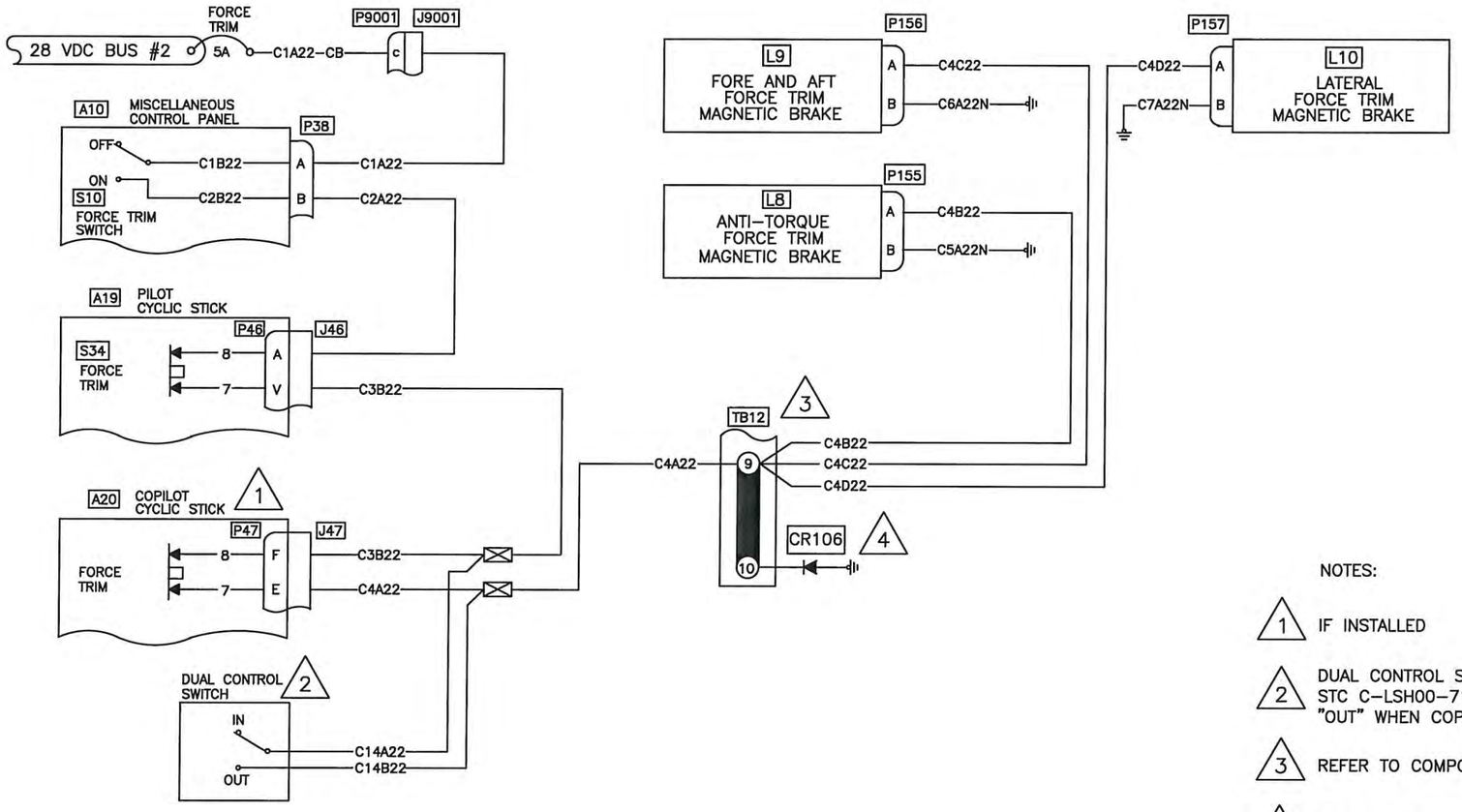

NOTES:

1. IF INSTALLED
2. DUAL CONTROL SWITCH INSTALLED PER STC C–LSH00–716/D. SELECT SWITCH TO "OUT" WHEN COPILOTS CYCLIC REMOVED.
3. REFER TO COMPONENT REPLACEMENT
4. USED FOR TRANSIENT SUPPRESSION

Figure 98–54S. FORCE TRIM

RELEASED
ECN20-105
2020.04.20

DESIGN: RD	DRAWN BY: RD	DART AEROSPACE LTD, HAWKESBURY, ONTARIO, CANADA	
CHECKED: RD	APPROVED: KB	DRAWING NO.: D212–725–2	REV. C
DATE: 07.05.01		TITLE: FIGURE 98–54S	SHEET 44 OF 57 SCALE: NTS

Copyright 2006 by DART AEROSPACE LTD

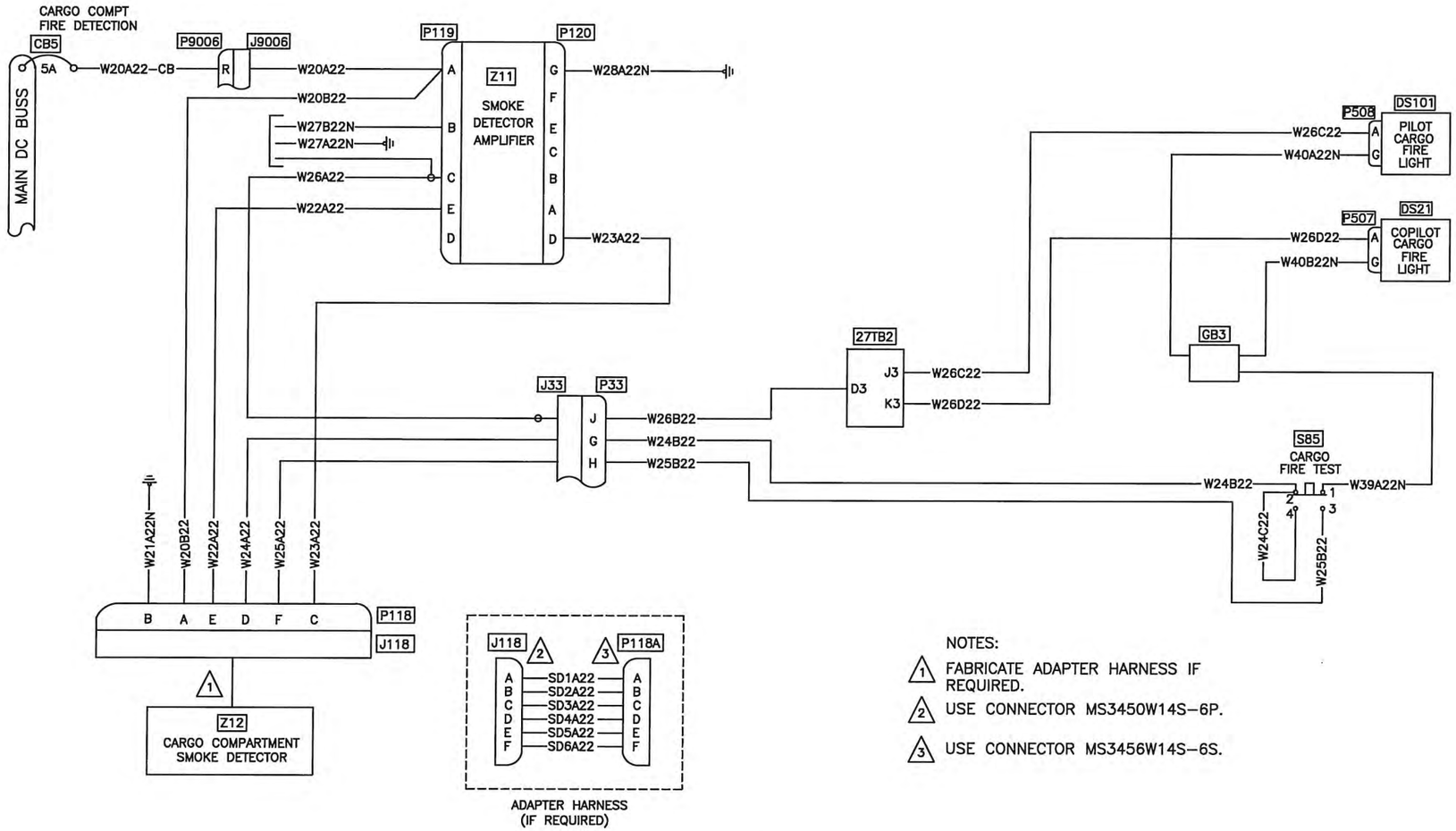

Figure 98-55S. CARGO FIRE DETECTION

RELEASED
ECN 20-105
2020.04.20

DESIGN: RD	DRAWN BY: RD	DART AEROSPACE LTD, HAWKESBURY, ONTARIO, CANADA	
CHECKED: RD	APPROVED: KD	DRAWING NO.: D212-725-2	REV. C
DATE: 07.05.01		TITLE: FIGURE 98-55S	SHEET 45 OF 57
			SCALE: NTS

Copyright 2006 by DART AEROSPACE LTD

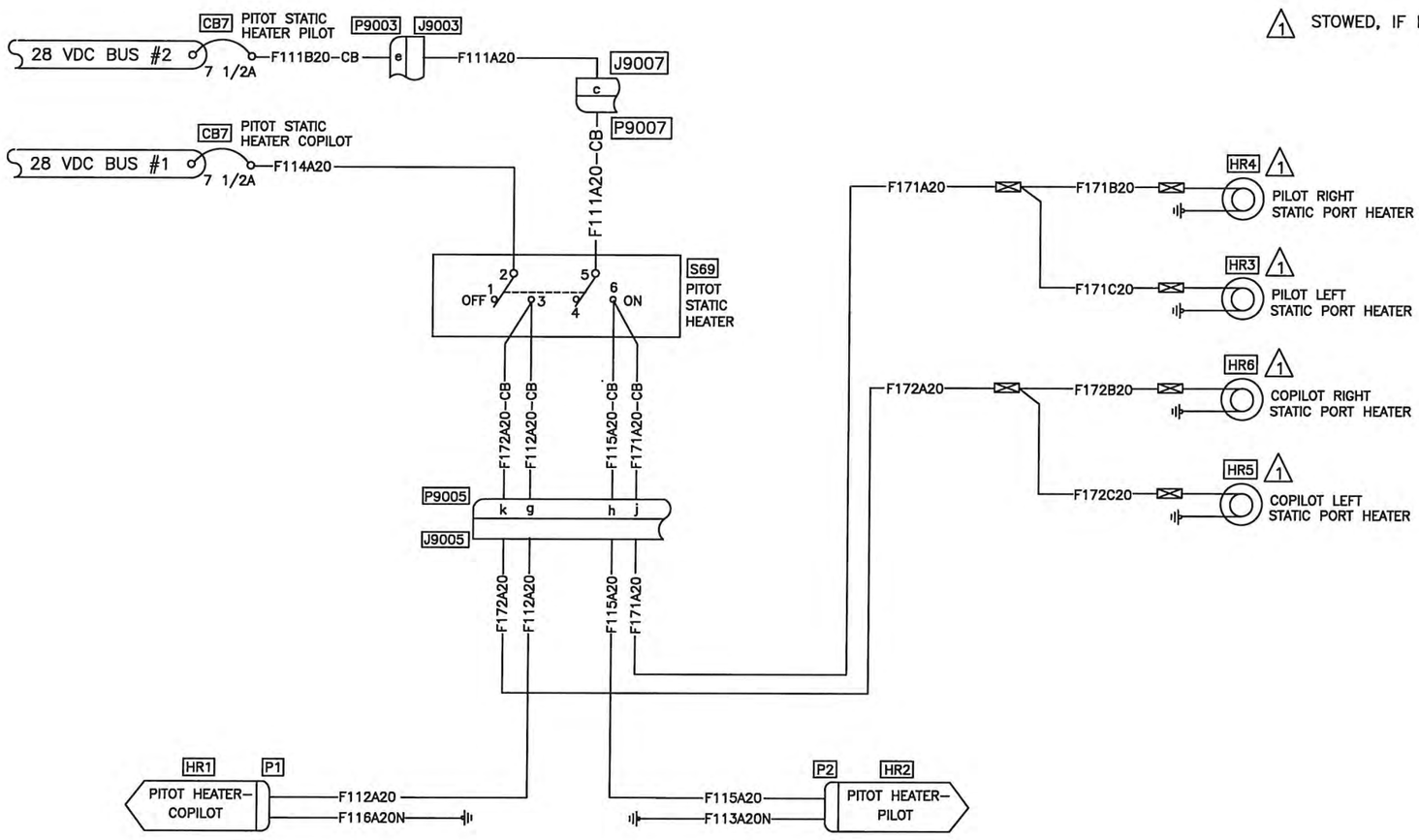

Figure 98-56S. PITOT STATIC HEATERS

RELEASED
ECN 20-105
2020.04.20

DESIGN	DRAWN BY	DART AEROSPACE LTD HAWKESBURY, ONTARIO, CANADA	
RD	RD		
CHECKED	APPROVED	DRAWING NO.	REV. B
RD		D212-725-2	SHEET 46 OF 57
DATE		TITLE	SCALE
07.01.30		FIGURE 98-56S	NTS

Copyright 2006 by DART AEROSPACE LTD

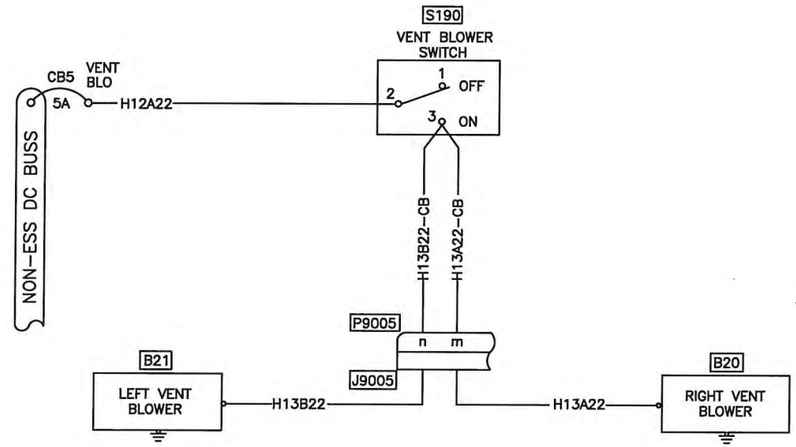

Figure 98–57S. VENT BLOWERS

RELEASED
ECN 20-105
2020.04.20

DESIGN: RD	DRAWN BY: RD	DART AEROSPACE LTD, HAWKESBURY, ONTARIO, CANADA	
CHECKED: RD	APPROVED: KD	DRAWING NO.: D212–725–2	REV. B
DATE: 07.01.30		TITLE: FIGURE 98–57S	SHEET 47 OF 57, SCALE: NTS

Copyright 2006 by DART AEROSPACE LTD

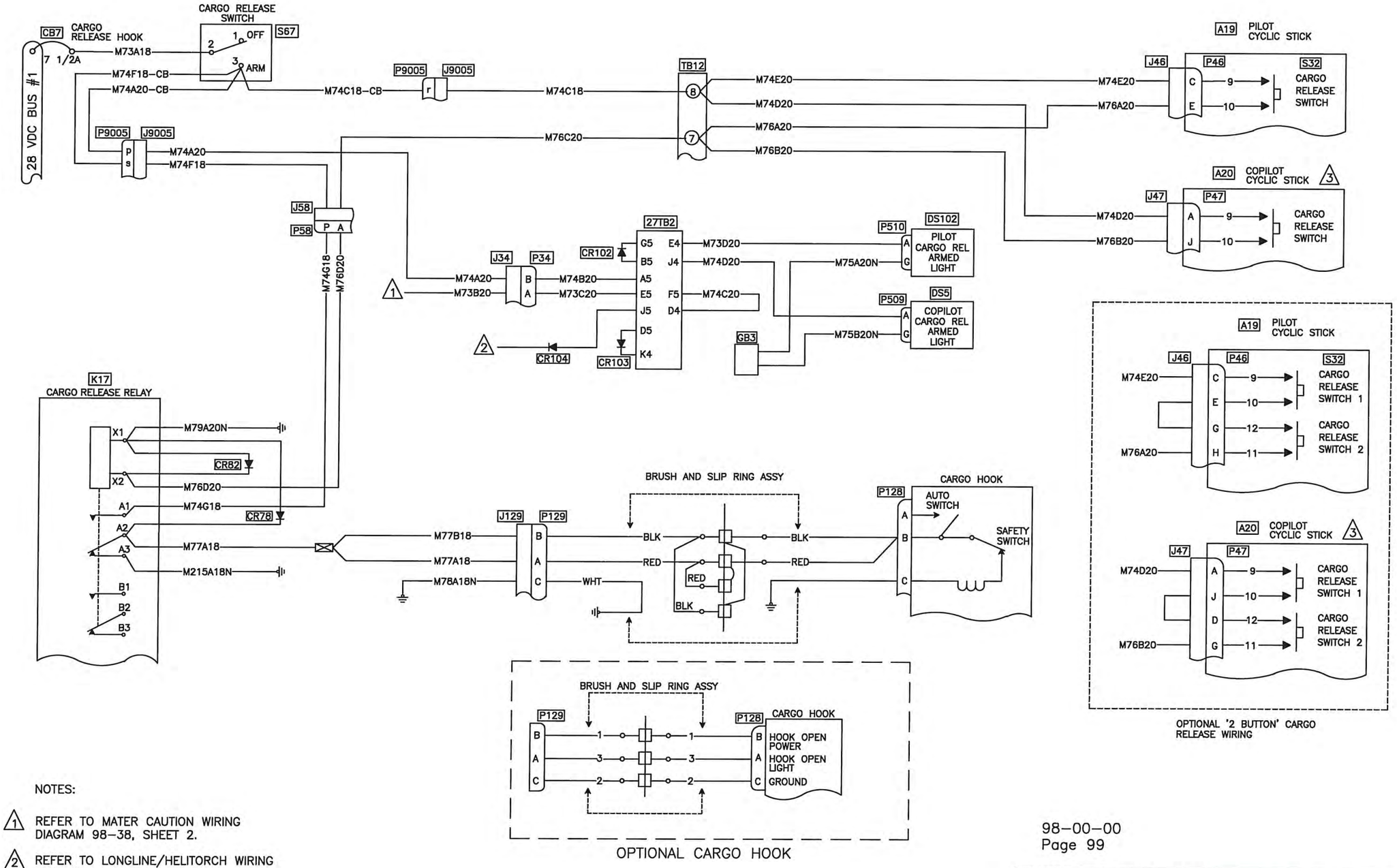

NOTES:

1. REFER TO MATER CAUTION WIRING DIAGRAM 98–38, SHEET 2.
2. REFER TO LONGLINE/HELITORCH WIRING DIAGRAM
3. IF COPILOT CYCLIC INSTALLED.

Figure 98–59S. CARGO RELEASE

RELEASED
ECN20-105
2020.04.20

DESIGN	DRAWN BY	DART AEROSPACE LTD HAWKESBURY, ONTARIO, CANADA	
RD	RD		
CHECKED	APPROVED	DRAWING NO.	REV. C
RD	KB	D212–725–2	SHEET 48 OF 57
DATE		TITLE	SCALE
07.05.01		FIGURE 98–59S	NTS

Copyright 2006 by DART AEROSPACE LTD

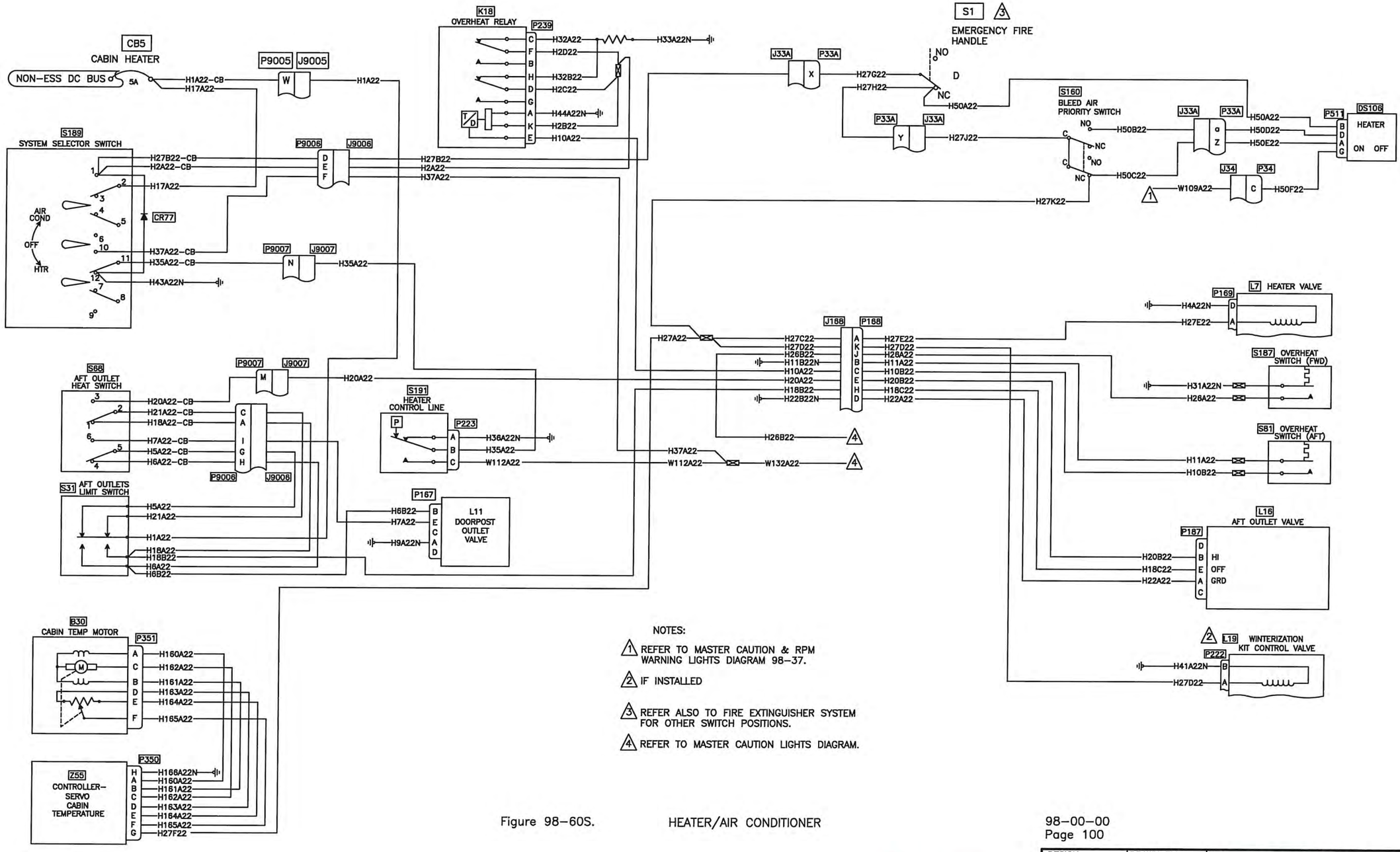

NOTES:

1. REFER TO MASTER CAUTION & RPM WARNING LIGHTS DIAGRAM 98-37.
2. IF INSTALLED
3. REFER ALSO TO FIRE EXTINGUISHER SYSTEM FOR OTHER SWITCH POSITIONS.
4. REFER TO MASTER CAUTION LIGHTS DIAGRAM.

Figure 98-60S. HEATER/AIR CONDITIONER

REVISED
ECN 20-105
2020.04.20

DESIGN: RD	DRAWN BY: RD	DART AEROSPACE LTD, HAWKESBURY, ONTARIO, CANADA	
CHECKED: RD	APPROVED:	DRAWING NO.: D212-725-2	REV. C
DATE: 07.05.01		TITLE: FIGURE 98-60S	SHEET 49 OF 57
			SCALE: NTS

Copyright 2006 by DART AEROSPACE LTD

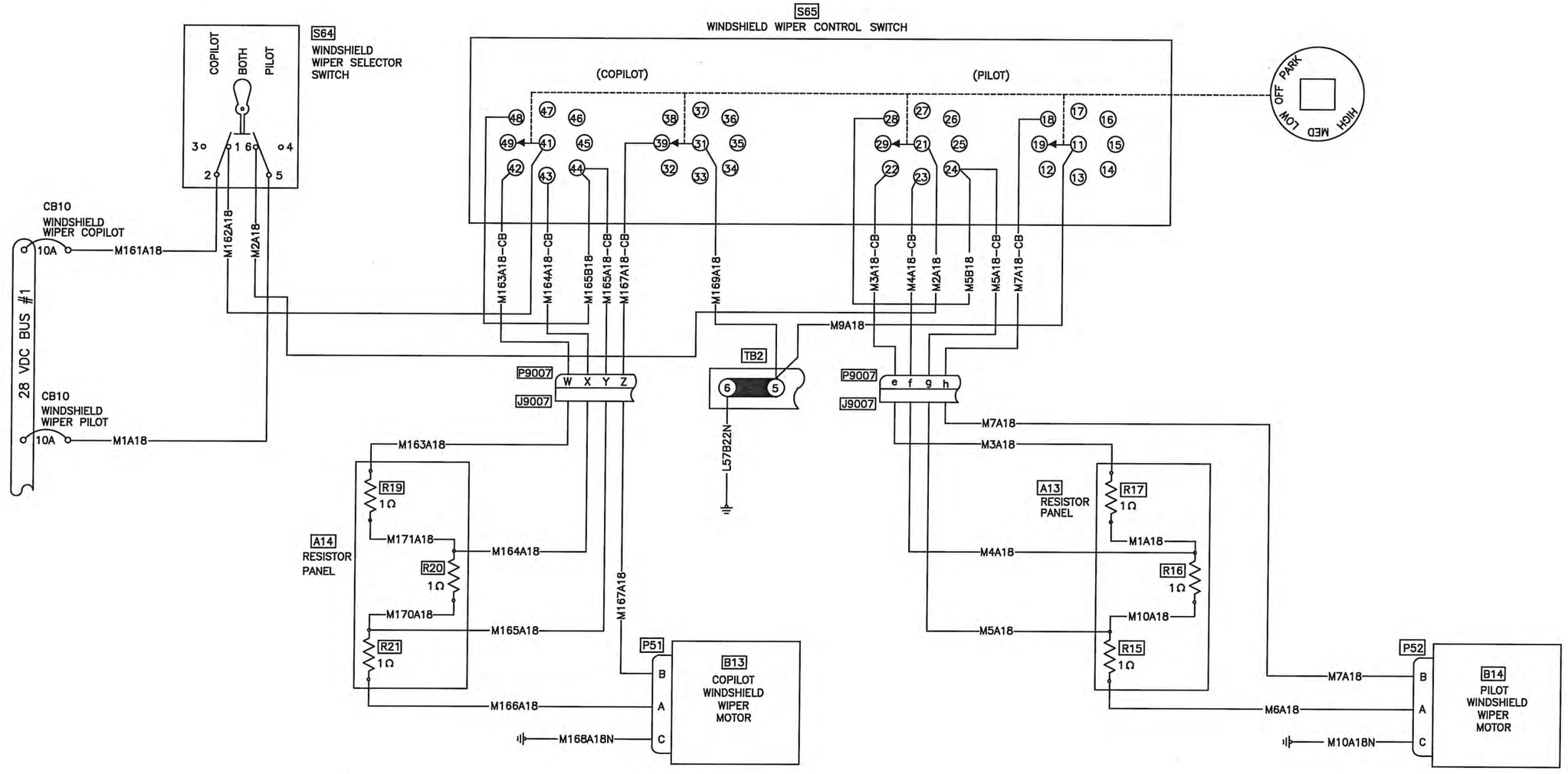

Figure 98–61S. WINDSHIELD WIPERS

ECN 20-105
2020.04.20

DESIGN	DRAWN BY	DART AEROSPACE LTD HAWKESBURY, ONTARIO, CANADA	
RD	RD		
CHECKED	APPROVED	DRAWING NO.	REV. B
RD	KB	D212-725-2	SHEET 50 OF 57
DATE		TITLE	SCALE
07.01.30		FIGURE 98–61S	NTS

Copyright 2006 by DART AEROSPACE LTD

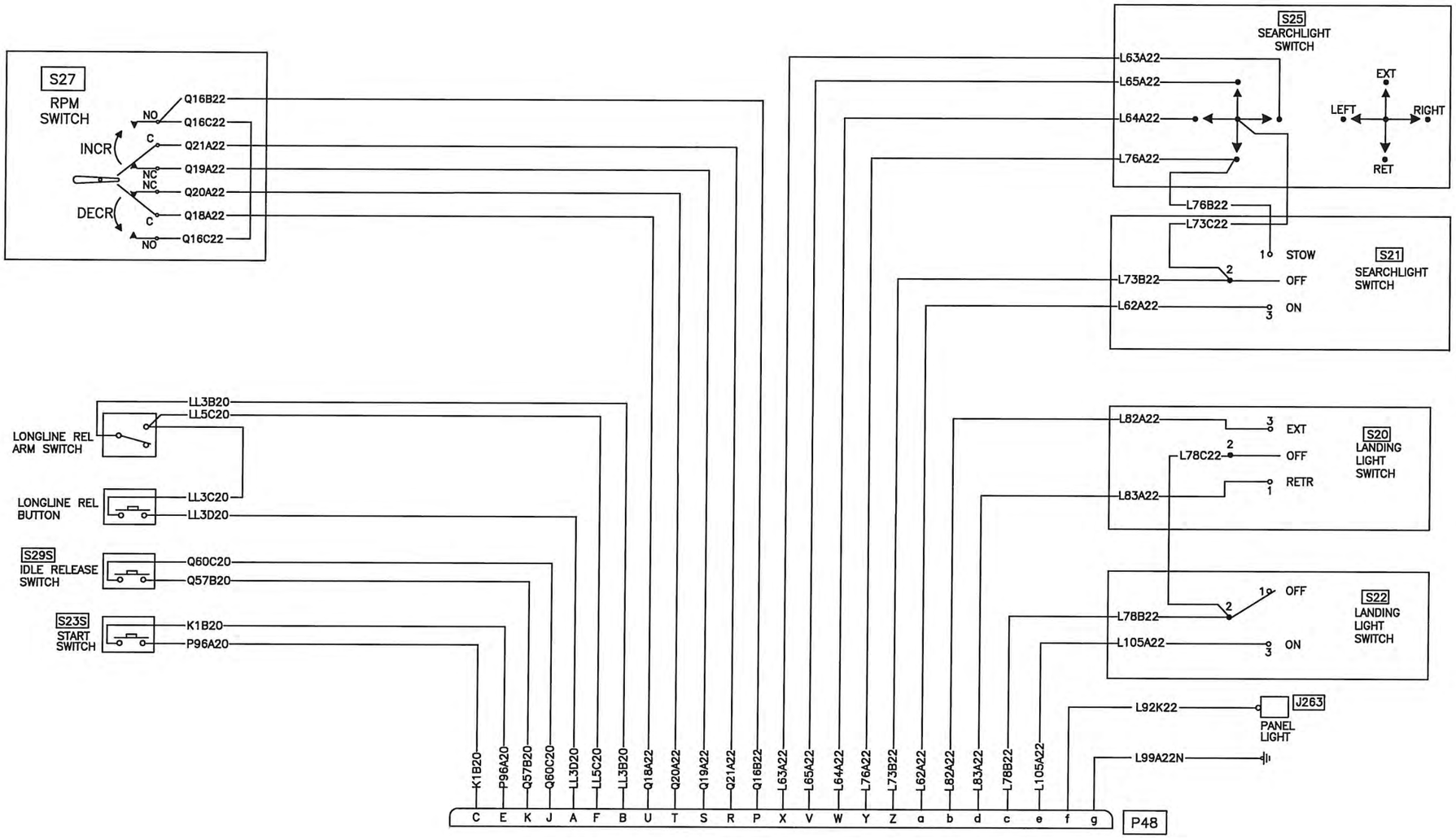

Fig. 98–62S PILOT COLLECTIVE STICK WIRING

98–00–00
Page 102

RELEASED
ECN 20-105
2020.04.20

DESIGN: RD	DRAWN BY: RD	DART AEROSPACE LTD, HAWKESBURY, ONTARIO, CANADA	
CHECKED: RD	APPROVED: KAB	DRAWING NO.: D212–725–2	REV. C
DATE: 07.05.01		TITLE: FIGURE 98–62S	SHEET 51 OF 57 SCALE: NTS

Copyright 2006 by DART AEROSPACE LTD

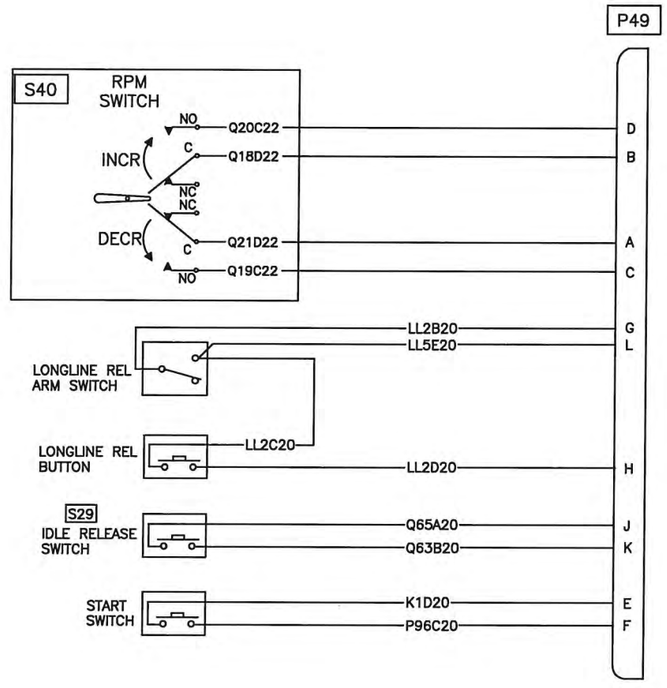

Fig. 98–63S COPILOT COLLECTIVE STICK WIRING (IF INSTALLED)

ECN 20-105
2020.04.20

DESIGN: RD	DRAWN BY: RD	DART AEROSPACE LTD, HAWKESBURY, ONTARIO, CANADA	
CHECKED: RD	APPROVED: KB	DRAWING NO.: D212-725-2	REV B
DATE: 07.01.30		TITLE: FIGURE 98–63S	SHEET 52 OF 57, SCALE: NTS

Copyright 2006 by DART AEROSPACE LTD

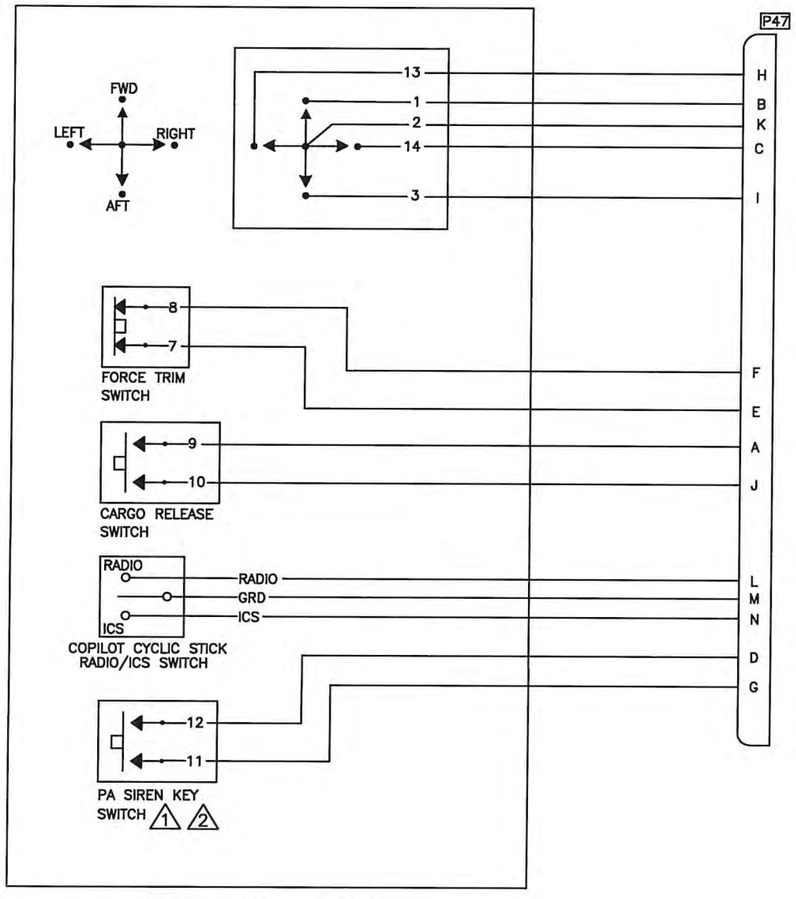

COPILOT's CYCLIC STICK

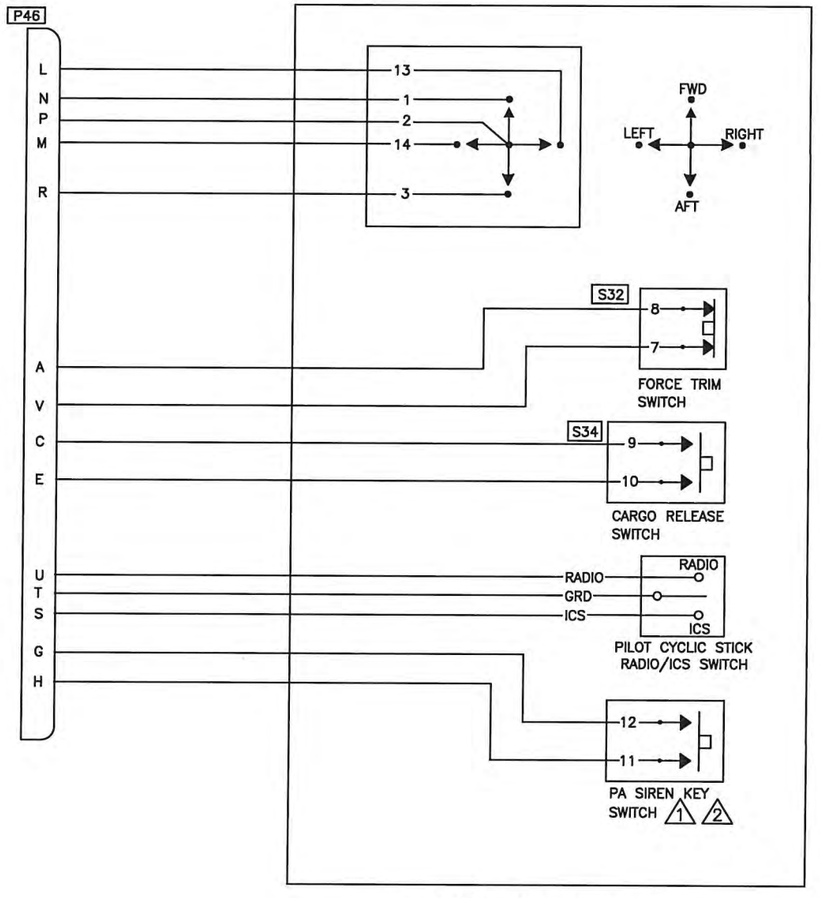

PILOT's CYCLIC STICK

NOTES:

1. IF INSTALLED
2. MAY ALSO BE USED AS SECOND CARGO RELEASE SWITCH. PA SIREN KEY IS THEN MOVED TO 'LEFT' ON CHINA HAT SWITCH.

Fig. 98-64S PILOT's & COPILOT's CYCLIC STICK WIRING DIAGRAM

ECN 20-105
2020.04.20

DESIGN	DRAWN BY	DART AEROSPACE LTD HAWKESBURY, ONTARIO, CANADA	
RD	RD		
CHECKED	APPROVED	DRAWING NO.	REV. C
RD	KB	D212-275-2	SHEET 53 OF 57
DATE		TITLE	SCALE
07.05.01		FIGURE 98-64S	NTS

Copyright 2006 by DART AEROSPACE LTD

NOTES:

1. REFER TO MASTER CAUTION DIAGRAM 98–38, SHEET 5.
2. WIRING PROVISIONS ONLY

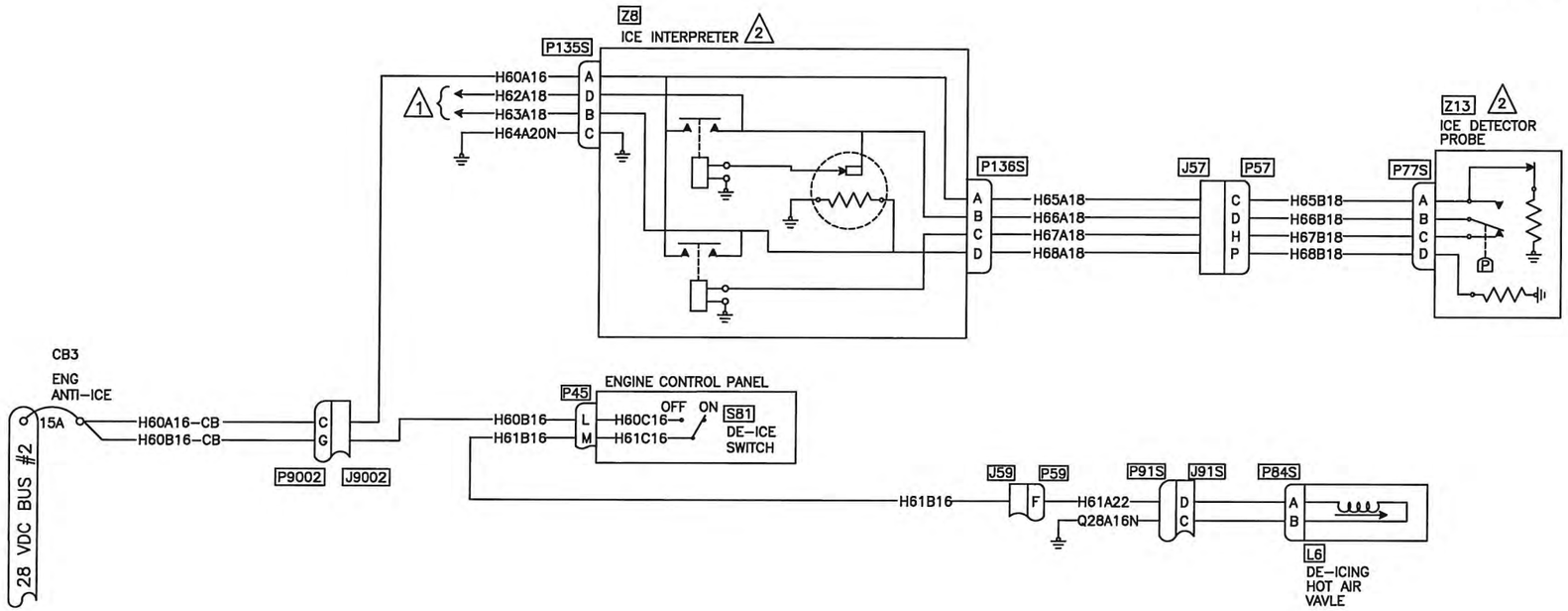

Figure 98–65S. ENGINE ANTI–ICING

ECN 20-105
2020.04.20

DESIGN: RD	DRAWN BY: RD	DART AEROSPACE LTD, HAWKESBURY, ONTARIO, CANADA	
CHECKED: RD	APPROVED: KB	DRAWING NO.: D212–725–2	REV. B
DATE: 07.01.30		TITLE: FIGURE 98–65S	SHEET 54 OF 57 SCALE: NTS

Copyright 2006 by DART AEROSPACE LTD

THIS PAGE INTENTIONALLY
LEFT BLANK

RELEASED
ECN 20-105
2020.04.20

DESIGN: RD	DRAWN BY: RD	DART AEROSPACE LTD HAWKESBURY, ONTARIO, CANADA	
CHECKED: RD	APPROVED: KB	DRAWING NO.: D212-725-2	REV. C
DATE: 07.05.01		TITLE: FIGURE 98-66S	SHEET 55 OF 57 SCALE: NTS

Copyright 2006 by DART AEROSPACE LTD

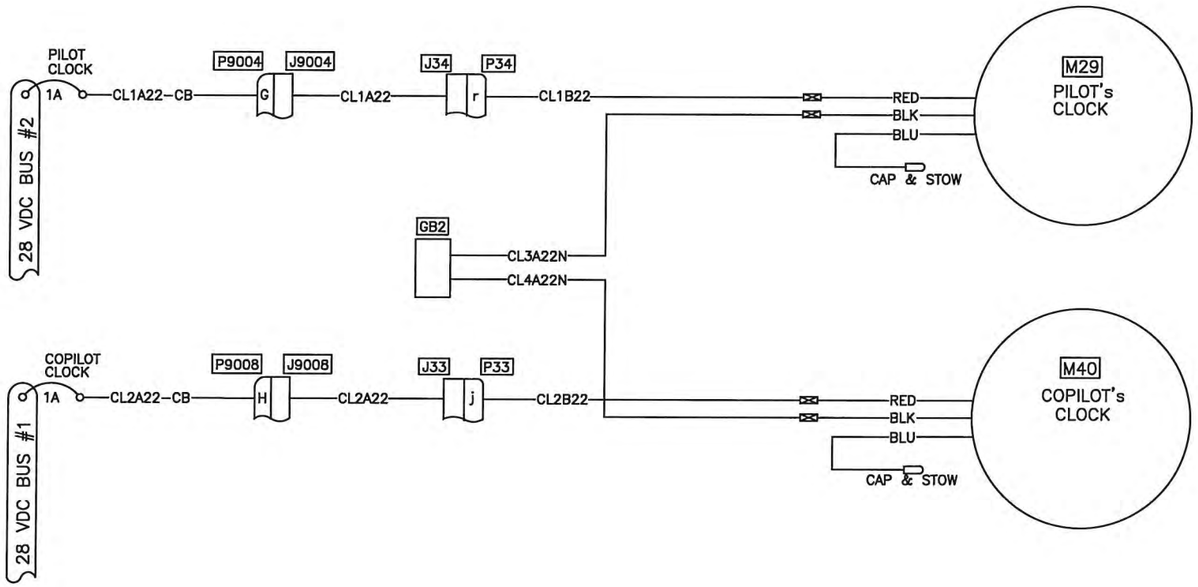

Figure 98–67S. PILOT AND COPILOT CLOCKS

ECM 20-105
2020.09.20

DESIGN: RD	DRAWN BY: RD	DART AEROSPACE LTD, HAWKESBURY, ONTARIO, CANADA	
CHECKED: RD	APPROVED: KBS	DRAWING NO.: D212–725–2	REV. B
DATE: 07.01.30		TITLE: FIGURE 98–67S	SHEET 56 OF 57
			SCALE: NTS

Copyright 2006 by DART AEROSPACE LTD

27TB1 TERMINAL BLOCK HOOK–UP

TB1

	A	F	L51E20
L51C20	B	G	L51J20
	C	H	L51H20
JUMPER TO D2	D	J	L51G20
L51D20	E	K	L51F20

TB2

L51R20	A	F	L58N20
L51B20	B	G	L58D20
L51K20	C	H	L58C20
JUMPER FROM D1	D	J	JUMPER TO D3
	E	K	

TB3

L58B20	A	F	L58F20
	B	G	L58G20
	C	H	
JUMPER FROM J2	D	J	
L58E20	E	K	

TB4

L46G20	A	F	L46J20
L46D20	B	G	L46L20
	C	H	L46S20
L46M20	D	J	
L46W20	E	K	L46B20

TB5

L140B20	A	F	L46F20
L46V20	B	G	L46E20
L46X20	C	H	
L46T20	D	J	
	E	K	

TB6

	A	F	E59C22
	B	G	E59E22
	C	H	E59D22
W45B22	D	J	W45A22
W115B22	E	K	E36B22

TB7

W159A22	A	F	W153C22
W159D22	B	G	W153D22
CR89/CR90	C	H	CR90
W76B22	D	J	
CR89	E	K	

TB8

D1E22	A	F	
D1C22	B	G	
D1D22	C	H	
D2G22	D	J	D2C22
D2F22	E	K	D2E22

TB9

W115C22	A	F	W115B22
CR92	B	G	CR92
	C	H	W110B22
E58E22	D	J	E58C22
E58D22	E	K	E30F22

	A	F	
	B	G	
	C	H	
	D	J	
	E	K	

27TB2 TERMINAL BLOCK HOOK–UP

TB1

L88F22	A	F	L139D22
L88C22	B	G	L139B22
L88D22	C	H	L139A22
W159D22	D	J	W159C22
W159B22	E	K	

TB2

	A	F	
	B	G	
	C	H	
W104C22	D	J	W104E22
W135B22	E	K	W104D22

TB3

W104B22	A	F	W104C22
CR101	B	G	CR101
	C	H	
W26B22	D	J	W26C22
	E	K	W26D22

TB4

LL5J20	A	F	LL5K20
CR105	B	G	CR105
	C	H	CR104
M74C20	D	J	M74D20
M73D20	E	K	CR103

TB5

M74B20	A	F	M74C20
CR102	B	G	CR102
	C	H	
CR103	D	J	CR104
M73C20	E	K	

TB6

	A	F	
	B	G	
	C	H	
	D	J	
	E	K	

	A	F	
	B	G	
	C	H	
	D	J	
	E	K	

NOTES:

1

Figure 98–68S. TERMINAL BLOCK HOOKUP

ECN 20-105
2020.04.20

DESIGN: RD	DRAWN BY: RD	DART AEROSPACE LTD, HAWKESBURY, ONTARIO, CANADA	
CHECKED: RD	APPROVED: KHS	DRAWING NO.: D212–725–2	REV. C
DATE: 07.05.01		TITLE: FIGURE 98–68S	SHEET 57 OF 57
			SCALE: NTS

Copyright 2006 by DART AEROSPACE LTD

WIRING DIAGRAM REVISIONS LIST

WIRING DIAGRAM NUMBER BHT-212-MM	WIRING DIAGRAM NUMBER D212-725-2-G2	SHEET #	REV	DATE	NOTES
N/A	N/A	I	E	23-01-10	-Wiring diagram revisions list sheet 1
N/A	N/A	II	E	23-01-10	-Wiring diagram revisions list sheet 2
N/A	N/A	III	E	23-01-10	-Wiring diagram revisions list sheet 3
N/A	N/A	IV	E	23-01-10	-Wiring diagram revisions list sheet 4
N/A	N/A	V	E	23-01-10	-Wiring diagram revisions list sheet 5
98-10	98-10S	1	A	08.11.24	-New issue for updated Generation 2 Helicopters
			B	10.08.10	-Change to Non-Essential Buss Control Relay pin out designators
			C	23-01-10	-Moved shunt wiring to starter-generator. Added shield feedthrough for GEN FIELD circuit breaker. Split breaker busses for clarity.
98-11	98-11S	2	A	08.11.24	-New issue for updated Generation 2 Helicopters
98-12	98-12S	3	A	08.11.24	-New issue for updated Generation 2 Helicopters
98-13	98-13S	4	A	08.11.24	-New issue for updated Generation 2 Helicopters
			B	23-01-10	-Added CAP and STOW to 26 VAC Bus
98-14	98-14S	5	A	08.11.24	-New issue for updated Generation 2 Helicopters
			B	10.08.10	-Removal of unused wires from generator lug E
			C	23-01-10	-Updated wire numbers at K3
98-15	98-15S	6	A	08.11.24	-New issue for updated Generation 2 Helicopters
98-16	N/A	N/A	N/A	N/A	-Particle Separator system removed and wiring diagram deleted.
98-17	98-17S	7	A	08.11.24	-New issue for updated Generation 2 Helicopters
			B	23-01-10	-Changed dimming bus series modules; updated pinouts.
98-18	98-18S	8	A	08.11.24	-New issue for updated Generation 2 Helicopters
			B	23-01-10	-Removed unnecessary splices at J99 and J49
98-19	98-19S	9	A	08.11.24	-New issue for updated Generation 2 Helicopters
			B	23-01-10	-Changed dimming bus series modules; updated pinouts. Add reference for Heater Switch/Indicator.

DESIGN	LW	**EAGLE COPTERS MAINTENANCE LTD** CALGARY, ALBERTA, CANADA
CHECKED	EB	DRAWING NO. REV. E D212-725-2-G2 SHEET I OF V
MFG. APPR.	N/A	
RELEASED		TITLE SCALE **WIRING DIAGRAMS** NTS
DE APPR.	N/A	
DATE 23-01-10		**COPYRIGHT © 2023 BY EAGLE COPTERS MAINTENANCE LTD** THIS DOCUMENT IS PRIVATE AND CONFIDENTIAL AND IS SUPPLIED ON THE EXPRESS CONDITION THAT IT IS NOT TO BE USED FOR ANY PURPOSE OR COPIED OR COMMUNICATED TO ANY OTHER PERSON WITHOUT WRITTEN PERMISSION FROM EAGLE COPTERS MAINTENANCE LTD.

WIRING DIAGRAM NUMBER BHT-212-MM	WIRING DIAGRAM NUMBER D212-725-2-G2	SHEET #	REV	DATE	NOTES
98-20	98-20S	10	A	08.11.24	-New issue for updated Generation 2 Helicopters
			B	10.08.10	-Correction to P281 connector pin labels
			C	23-01-10	-Test switches correctly shown as DPDT w/ jumper.
98-21	98-21S	11	A	08.11.24	-New issue for updated Generation 2 Helicopters
			B	10.08.10	-Removal of shield ground wire at Oil Pressure Transmitters
98-22	98-22S	12	A	08.11.24	-New issue for updated Generation 2 Helicopters
			B	23-01-10	-Changed dimming bus series modules; updated pinouts. Moved 27TB1 references to 98-17S. Added label to CB2.
98-23	98-23S	13	A	08.11.24	-New issue for updated Generation 2 Helicopters
			B	23-01-10	-Thermocouple wire shown as shielded pair.
98-24	98-24S	14	A	08.11.24	-New issue for updated Generation 2 Helicopters
			B	10.08.10	-Removal of shield ground wire at Torque Pressure Transmitters
98-25	98-25S	15	A	08.11.24	-New issue for updated Generation 2 Helicopters
			B	10.08.10	-Removal of shield ground wire at Hydraulic Pressure Transmitters
98-26	98-26S	16	A	08.11.24	-New issue for updated Generation 2 Helicopters
			B	10.08.10	-Change to Hourmeter Relay pin out designators
			C	23-01-10	-Changed dimming bus series modules; updated pinouts.
98-27	98-27S	17	A	08.11.24	-New issue for updated Generation 2 Helicopters
98-28	98-28S	18	A	08.11.24	-New issue for updated Generation 2 Helicopters
			B	10.08.10	-Addition of Electronic Attitude Indicator hookup.
98-29	98-29S	19	A	08.11.24	-New issue for updated Generation 2 Helicopters
			B	23-01-10	-Addition of Electronic Heading Indicator hookup
98-30	98-30S	20	A	08.11.24	-New issue for updated Generation 2 Helicopters
			B	10.08.10	-Removal from diagram of unused ‘cap & stowed’ wire
98-31	98-31S	21	A	08.11.24	-New issue for updated Generation 2 Helicopters
98-32	98-32S	22	A	08.11.24	-New issue for updated Generation 2 Helicopters

DESIGN	LW	**EAGLE COPTERS MAINTENANCE LTD** CALGARY, ALBERTA, CANADA
CHECKED	EB	DRAWING NO. REV. E
MFG. APPR.	N/A	D212-725-2-G2 SHEET II OF V
RELEASED	MP	TITLE SCALE
DE APPR.	N/A	**WIRING DIAGRAMS** NTS
DATE 23-01-10		**COPYRIGHT © 2023 BY EAGLE COPTERS MAINTENANCE LTD** THIS DOCUMENT IS PRIVATE AND CONFIDENTIAL AND IS SUPPLIED ON THE EXPRESS CONDITION THAT IT IS NOT TO BE USED FOR ANY PURPOSE OR COPIED OR COMMUNICATED TO ANY OTHER PERSON WITHOUT WRITTEN PERMISSION FROM EAGLE COPTERS MAINTENANCE LTD.

WIRING DIAGRAM NUMBER BHT-212-MM	WIRING DIAGRAM NUMBER D212-725-2-G2	SHEET #	REV	DATE	NOTES
98-33	98-33S	23	A	08.11.24	-New issue for updated Generation 2 Helicopters
			B	10.08.10	-Clarification of shielding at Fuel Quantity Indicator
			C	23-01-10	-Added disconnects to LH and RH capacitance simulators
98-34	98-34S	24	A	08.11.24	-New issue for updated Generation 2 Helicopters
			B	10.08.10	-Addition of Note regarding lighting for Electronic ADI
			C	23-01-10	-Changed dimming bus series modules; updated pinouts. Moved passenger warning light to 98-40S; non-dimmable.
98-35	98-35S	25	A	08.11.24	-New issue for updated Generation 2 Helicopters
			B	10.08.10	-Addition of Note regarding lighting for Electronic ADI
			C	23-01-10	-Changed dimming bus series modules; updated pinouts. Added wiring to standby compass.
98-36	98-36S	26	A	08.11.24	-New issue for updated Generation 2 Helicopters
			B	10.08.10	-Correction to lighting pinouts for MGT/EGT and Fuel Px Indicators
			C	23-01-10	-Changed dimming bus series modules; updated pinouts. Removed post light and changed to Engine Inst Overlay light.
98-37	98-37S	27	A	08.11.24	-New issue for updated Generation 2 Helicopters
			B	10.08.10	-Change to Master Caution Fail Relay pin out designators
			C	23-01-10	-Changed dimming bus series modules; updated pinouts.
98-38 Sheet 1	98-38S Sheet 1	28	A	08.11.24	-New issue for updated Generation 2 Helicopters
			B	10.08.10	-Wire gauge change for Fuel Differential Pressure Switch
98-38 Sheet 2	98-38S Sheet 2	29	A	08.11.24	-New issue for updated Generation 2 Helicopters
98-38 Sheet 3	98-38S Sheet 3	30	A	08.11.24	-New issue for updated Generation 2 Helicopters
			B	23-01-10	-Routed wiring through overhead disconnects.
98-38 Sheet 4	98-38S Sheet 4	31	A	08.11.24	-New issue for updated Generation 2 Helicopters
			C	17.10.25	-Revised to include diode near J9005 and Note 17.
			D	23-01-10	-Moved diode location to TB80.

DESIGN	LW	**EAGLE COPTERS MAINTENANCE LTD** CALGARY, ALBERTA, CANADA
CHECKED	EB	DRAWING NO. REV. E
MFG. APPR.	N/A	D212-725-2-G2 SHEET III OF V
RELEASED	MP	TITLE SCALE
DE APPR.	N/A	**WIRING DIAGRAMS** NTS
DATE 23-01-10		**COPYRIGHT © 2023 BY EAGLE COPTERS MAINTENANCE LTD** THIS DOCUMENT IS PRIVATE AND CONFIDENTIAL AND IS SUPPLIED ON THE EXPRESS CONDITION THAT IT IS NOT TO BE USED FOR ANY PURPOSE OR COPIED OR COMMUNICATED TO ANY OTHER PERSON WITHOUT WRITTEN PERMISSION FROM EAGLE COPTERS MAINTENANCE LTD.

WIRING DIAGRAM NUMBER BHT-212-MM	WIRING DIAGRAM NUMBER D212-725-2-G2	SHEET #	REV	DATE	NOTES
98-38 Sheet 5	98-38S Sheet 5	32	A	08.11.24	-New issue for updated Generation 2 Helicopters
			C	17.10.25	-Revised to include Rotor Brake Pins U and V on P43, alternate circuit breaker wiring for new MCP, and Notes 16 and 17
			D	20.03.20	-Added MCP part number.
			E	23-01-10	-Changed dimming bus series modules; updated pinouts. Corrected the splicing representation.
98-39	98-39S	33	A	08.11.24	-New issue for updated Generation 2 Helicopters
98-40	98-40S	34	A	08.11.24	-New issue for updated Generation 2 Helicopters
			B	23-01-10	-Moved passenger warning lamp from 98-34S to non-dimmable breaker.
98-41	98-41S	35	A	08.11.24	-New issue for updated Generation 2 Helicopters
98-42	98-42S	36	A	08.11.24	-New issue for updated Generation 2 Helicopters
98-43	98-43S	37	A	08.11.24	-New issue for updated Generation 2 Helicopters
98-44	98-44S	38	A	08.11.24	-New issue for updated Generation 2 Helicopters
98-45	98-45S	39	A	08.11.24	-New issue for updated Generation 2 Helicopters
			B	23-01-10	-Corrected the splicing representation.
98-46	98-46S	40	A	08.11.24	-New issue for updated Generation 2 Helicopters
98-47	98-47S	41	A	08.11.24	-Wiring routed thru CB panel disconnects.
98-48	98-48S	42	A	08.11.24	-New issue for updated Generation 2 Helicopters
98-49	98-49S	43	A	08.11.24	-New issue for updated Generation 2 Helicopters
98-54	98-54S	44	A	08.11.24	-New issue for updated Generation 2 Helicopters
98-55	98-55S	45	A	08.11.24	-New issue for updated Generation 2 Helicopters
			B	23-01-10	-Changed dimming bus series modules; updated pinouts.
98-56	98-56S	46	A	08.11.24	-New issue for updated Generation 2 Helicopters
98-57	98-57S	47	A	08.11.24	-New issue for updated Generation 2 Helicopters
98-58	N/A	N/A	N/A	N/A	-Wiring diagram deleted.
98-59	98-59S	48	A	08.11.24	-New issue for updated Generation 2 Helicopters
			B	23-01-10	-Changed dimming bus series modules; updated pinouts.

DESIGN	LW	**EAGLE COPTERS MAINTENANCE LTD** CALGARY, ALBERTA, CANADA
CHECKED	EB	DRAWING NO. D212-725-2-G2 REV. E SHEET IV OF V
MFG. APPR.	N/A	
RELEASED	MP	TITLE **WIRING DIAGRAMS** SCALE NTS
DE APPR.	N/A	
DATE 23-01-10		**COPYRIGHT © 2023 BY EAGLE COPTERS MAINTENANCE LTD** THIS DOCUMENT IS PRIVATE AND CONFIDENTIAL AND IS SUPPLIED ON THE EXPRESS CONDITION THAT IT IS NOT TO BE USED FOR ANY PURPOSE OR COPIED OR COMMUNICATED TO ANY OTHER PERSON WITHOUT WRITTEN PERMISSION FROM EAGLE COPTERS MAINTENANCE LTD.

WIRING DIAGRAM NUMBER BHT-212-MM	WIRING DIAGRAM NUMBER D212-725-2-G2	SHEET #	REV	DATE	NOTES
98-60	98-60S	49	A	08.11.24	-New issue for updated Generation 2 Helicopters
			C	17.10.25	-Revised to include note on Effectivity of Serial Numbers.
98-61	98-61S	50	A	08.11.24	-New issue for updated Generation 2 Helicopters
			B	23-01-10	-Routed wiring through overhead disconnects.
98-62	98-62S	51	A	08.11.24	-New issue for updated Generation 2 Helicopters
98-63	98-63S	52	A	08.11.24	-New issue for updated Generation 2 Helicopters
98-64	98-64S	53	A	08.11.24	-New issue for updated Generation 2 Helicopters
98-65	98-65S	54	A	08.11.24	-New issue for updated Generation 2 Helicopters
			C	17.10.25	-Revised to include View A and added Notes 3 and 4.
			D	20.03.20	-Added MCP part number.
			E	23-01-10	-Removed view A. Split wire P/J59.
98-66	98-66S	55	A	08.11.24	-New issue for updated Generation 2 Helicopters
98-67	98-67S	56	A	08.11.24	-New issue for updated Generation 2 Helicopters
			B	23-01-10	-Changed dimming bus series modules; updated pinouts.
98-68	98-68S	57	A	08.11.24	-New issue for updated Generation 2 Helicopters
			B	23-10-10	-Terminal modules changed series from M81714/2 to /60. Updated layout and pinouts; included Figure references.

DESIGN	LW	**EAGLE COPTERS MAINTENANCE LTD** CALGARY, ALBERTA, CANADA
CHECKED	EB	DRAWING NO. REV. E
MFG. APPR.	N/A	D212-725-2-G2 SHEET V OF V
RELEASED	MP	TITLE SCALE
DE APPR.	N/A	**WIRING DIAGRAMS** NTS
DATE 23-01-10		

COPYRIGHT © 2023 BY EAGLE COPTERS MAINTENANCE LTD
THIS DOCUMENT IS PRIVATE AND CONFIDENTIAL AND IS SUPPLIED ON THE EXPRESS CONDITION THAT IT IS NOT TO BE USED FOR ANY PURPOSE OR COPIED OR COMMUNICATED TO ANY OTHER PERSON WITHOUT WRITTEN PERMISSION FROM EAGLE COPTERS MAINTENANCE LTD.

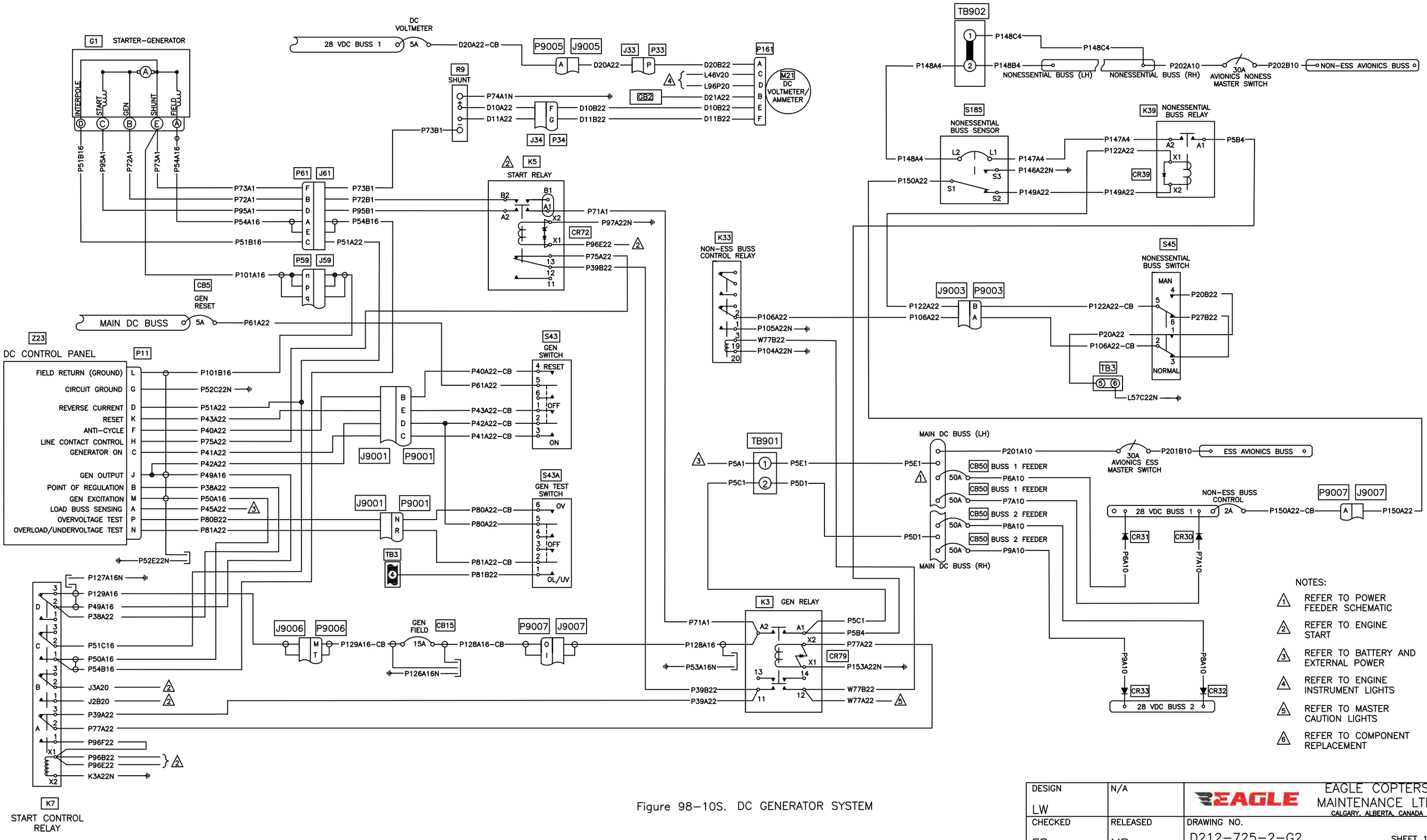

Figure 98–10S. DC GENERATOR SYSTEM

DESIGN LW	N/A	EAGLE COPTERS MAINTENANCE LTD. CALGARY, ALBERTA, CANADA	
CHECKED EB	RELEASED MP	DRAWING NO. D212–725–2–G2	REV. C SHEET 1 OF 57
DATE 23–01–10		TITLE FIGURE 98–10S	SCALE NTS

Copyright 2023 by EAGLE COPTERS MAINTENANCE LTD.

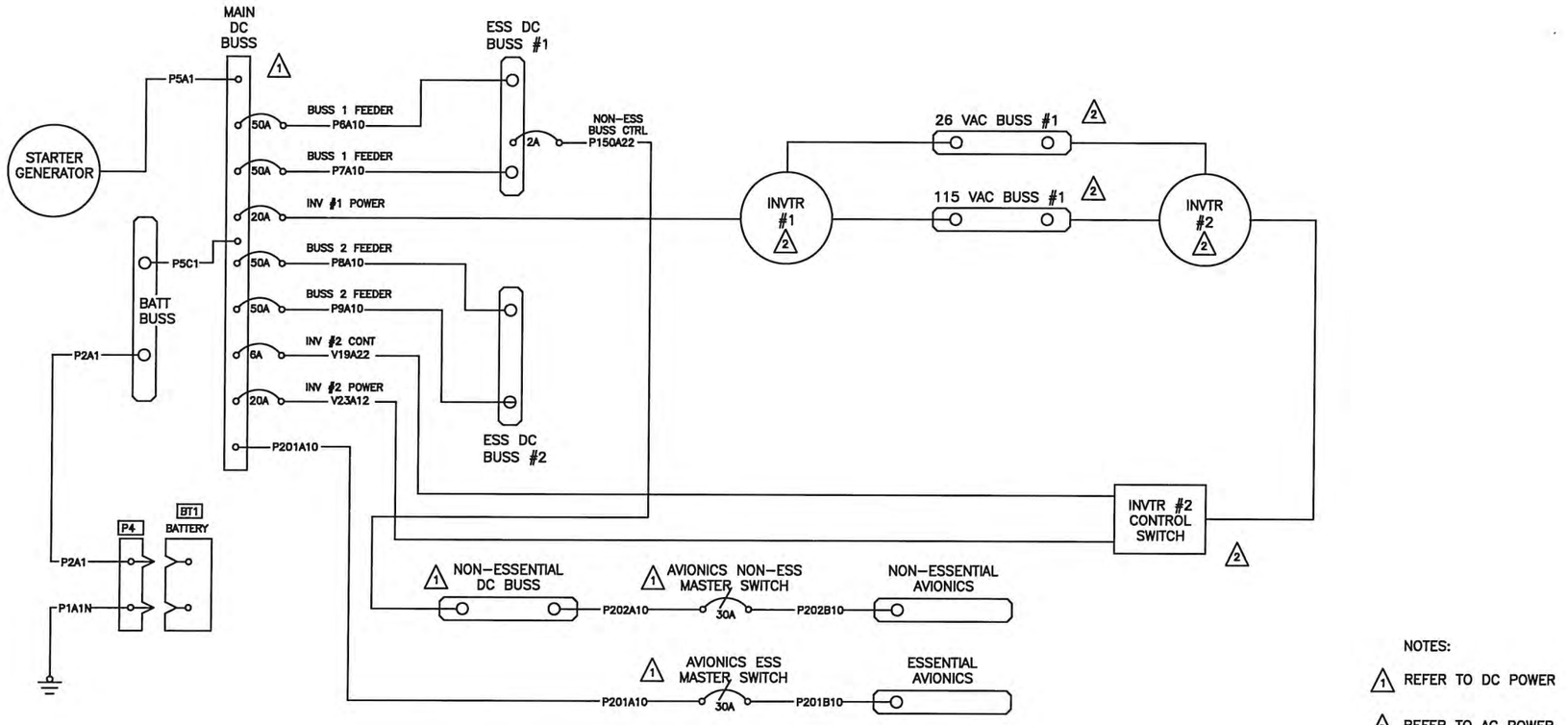

NOTES:

1. REFER TO DC POWER
2. REFER TO AC POWER

RELEASED
ECN 20-105
2020.09.20

Figure 98-11S. DC and AC Power Feeder Schematic (Simplified)

(EFFECTIVE ON ALL S/N, EXCEPT 30687, 30931, 30576, 30817 & 30599)

DESIGN	DRAWN BY	DART AEROSPACE LTD HAWKESBURY, ONTARIO, CANADA	
RD	RD		
CHECKED	APPROVED	DRAWING NO.	REV. A
RD	KB	D212-725-2-G2	SHEET 2 OF 57
DATE		TITLE	SCALE
08.11.24		FIGURE 98-11S	NTS

Copyright 2008 by DART AEROSPACE LTD

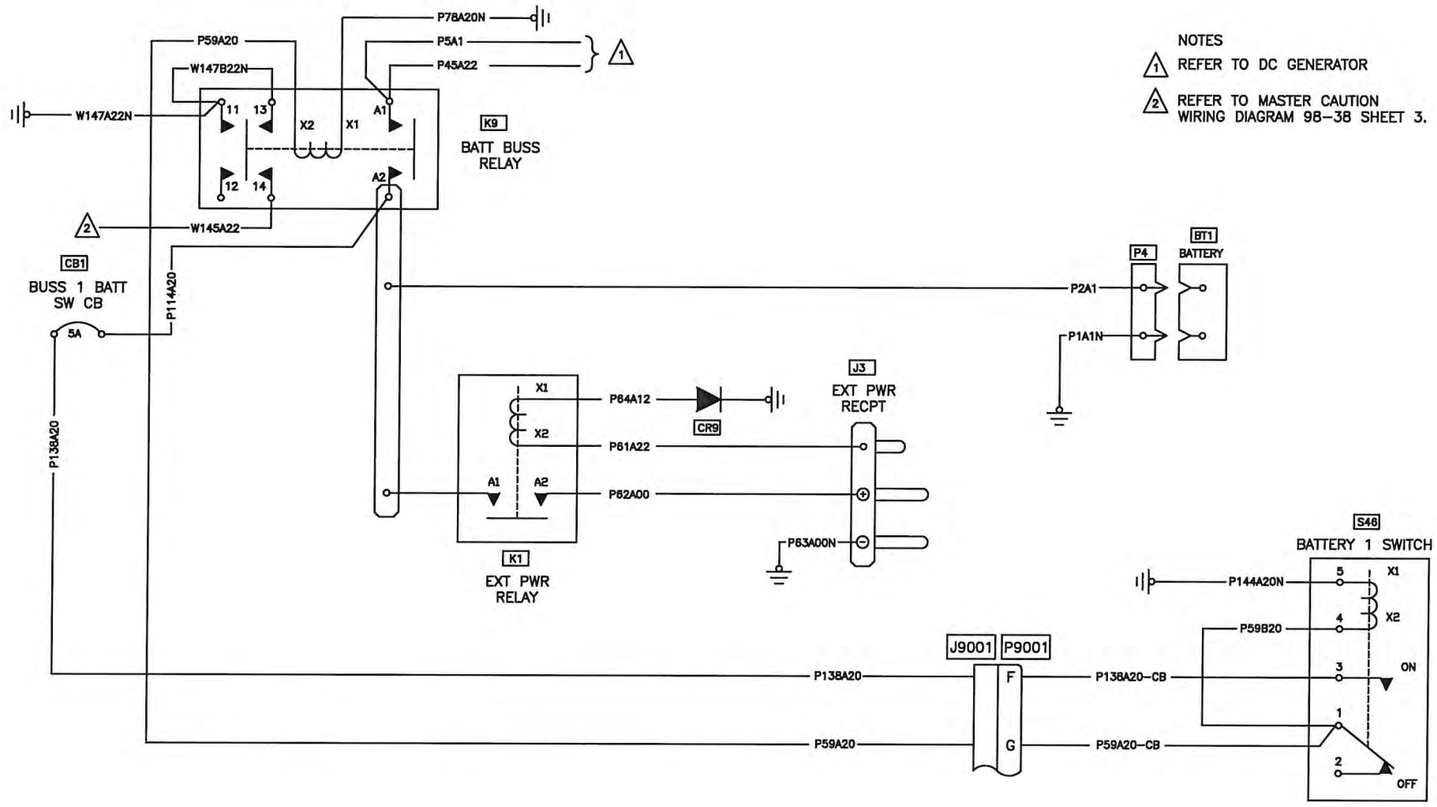

Figure 98-12S. BATTERY AND EXTERNAL POWER

RELEASED
ECN 20-105
2020.04.20

DESIGN	DRAWN BY	DART AEROSPACE LTD HAWKESBURY, ONTARIO, CANADA	
RD	RD		
CHECKED	APPROVED	DRAWING NO.	REV. A
RD	KB	D212-725-2-G2	SHEET 3 OF 57
DATE		TITLE	SCALE
08.11.24		FIGURE 98-12S	NTS

Copyright 2008 by DART AEROSPACE LTD

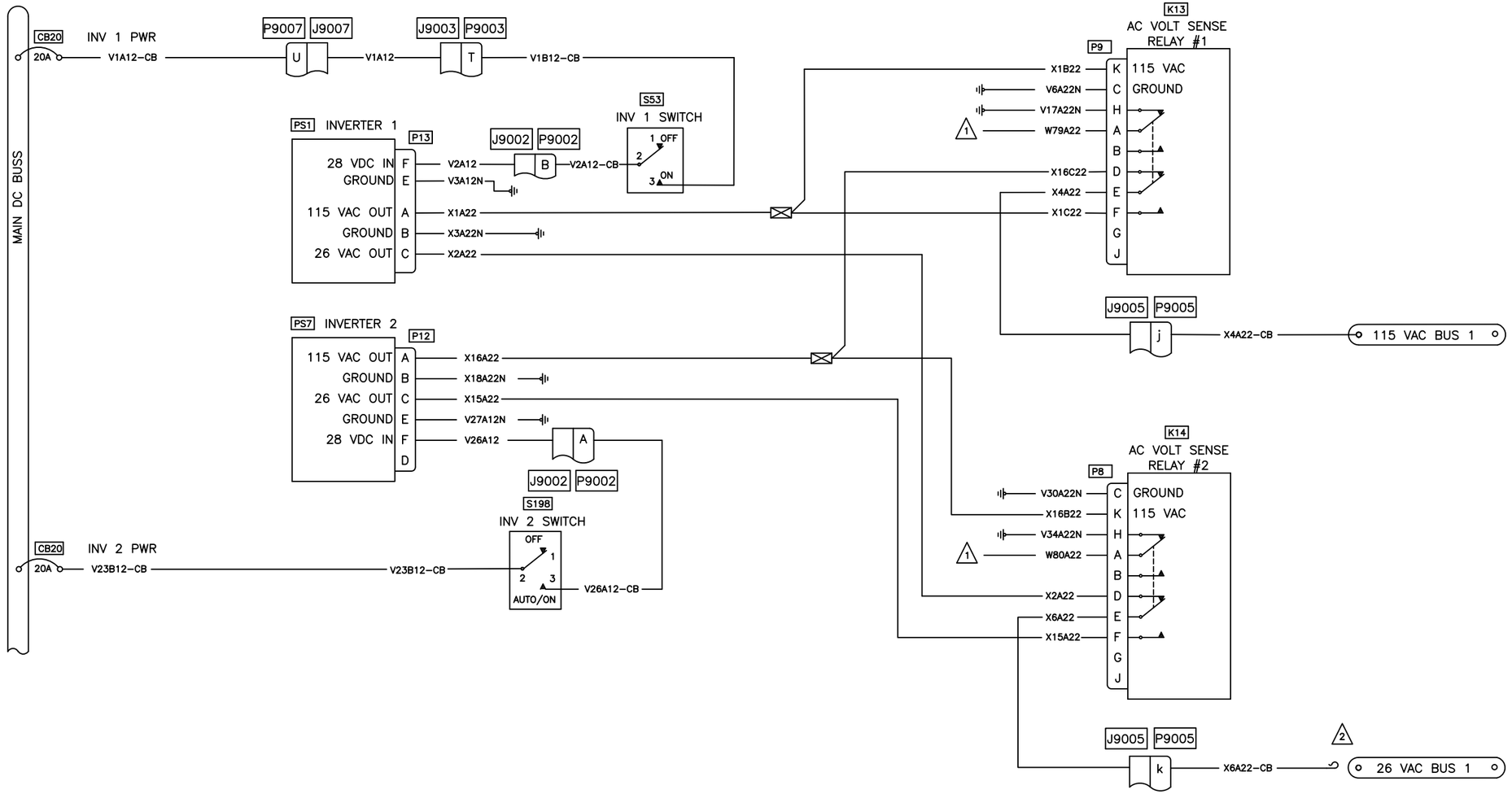

NOTES:

1. REFER TO MASTER CAUTION LIGHTS
2. CAP & STOW WHEN DIAMOND J TORQUE GAGE USED. REFER TO TORQUE INDICATOR SYSTEM 98-24S.

Figure 98-13S. AC POWER
(EFFECTIVE ON ALL S/N, EXCEPT 30687, 30817 & 30599)

DESIGN LW	N/A	EAGLE COPTERS MAINTENANCE LTD. CALGARY, ALBERTA, CANADA	
CHECKED EB	RELEASED MP	DRAWING NO. D212-725-2-G2	REV. B SHEET 4 OF 57
DATE 23-01-10		TITLE FIGURE 98-13S	SCALE NTS

Copyright 2023 by EAGLE COPTERS MAINTENANCE LTD.

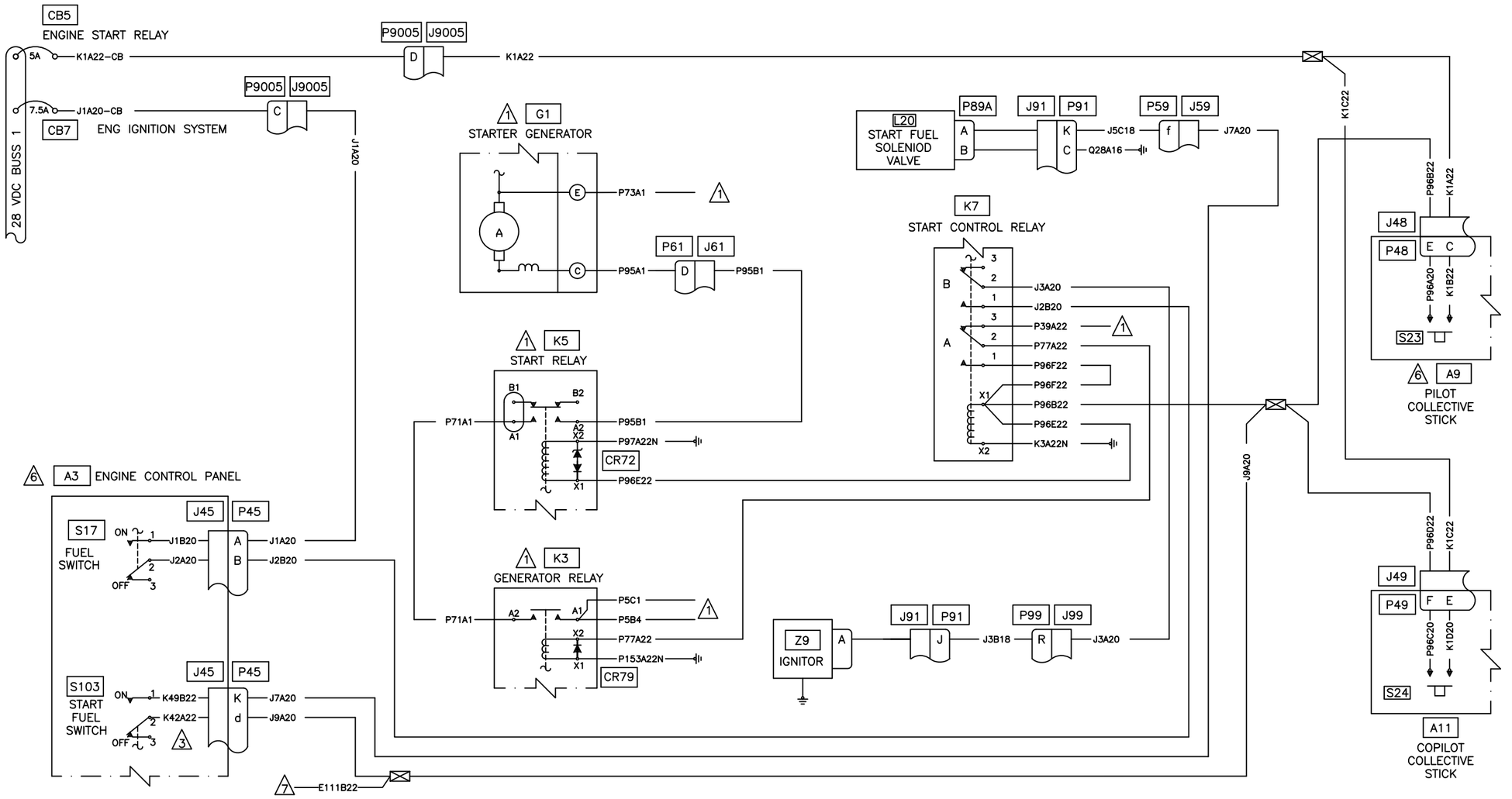

NOTES:

1. REFER TO DC GENERATOR
2. REFER TO FUEL SYSTEM
3. SWITCH INSTALLED PER START FUEL S.T.C. SH4T15NM
4. REFER TO MASTER CAUTION AND RPM CAUTION LIGHTS
5. RESERVED
6. REFER TO COMPONENT REPLACEMENT
7. REFER TO MGT INDICATOR WIRING DIAGRAM 98-23S. INSTALLED ONLY IF ANALOG/DIGITAL GAUGE INSTALLED.

Figure 98-14S. ENGINE START
(EFFECTIVE ON ALL S/N, EXCEPT 30687, 30817 & 30599)

DESIGN LW	N/A	EAGLE COPTERS MAINTENANCE LTD. CALGARY, ALBERTA, CANADA	
CHECKED EB	RELEASED MP	DRAWING NO. D212-725-2-G2	REV. C SHEET 5 OF 57
DATE 23-01-10		TITLE FIGURE 98-14S	SCALE NTS

Copyright 2023 by EAGLE COPTERS MAINTENANCE LTD

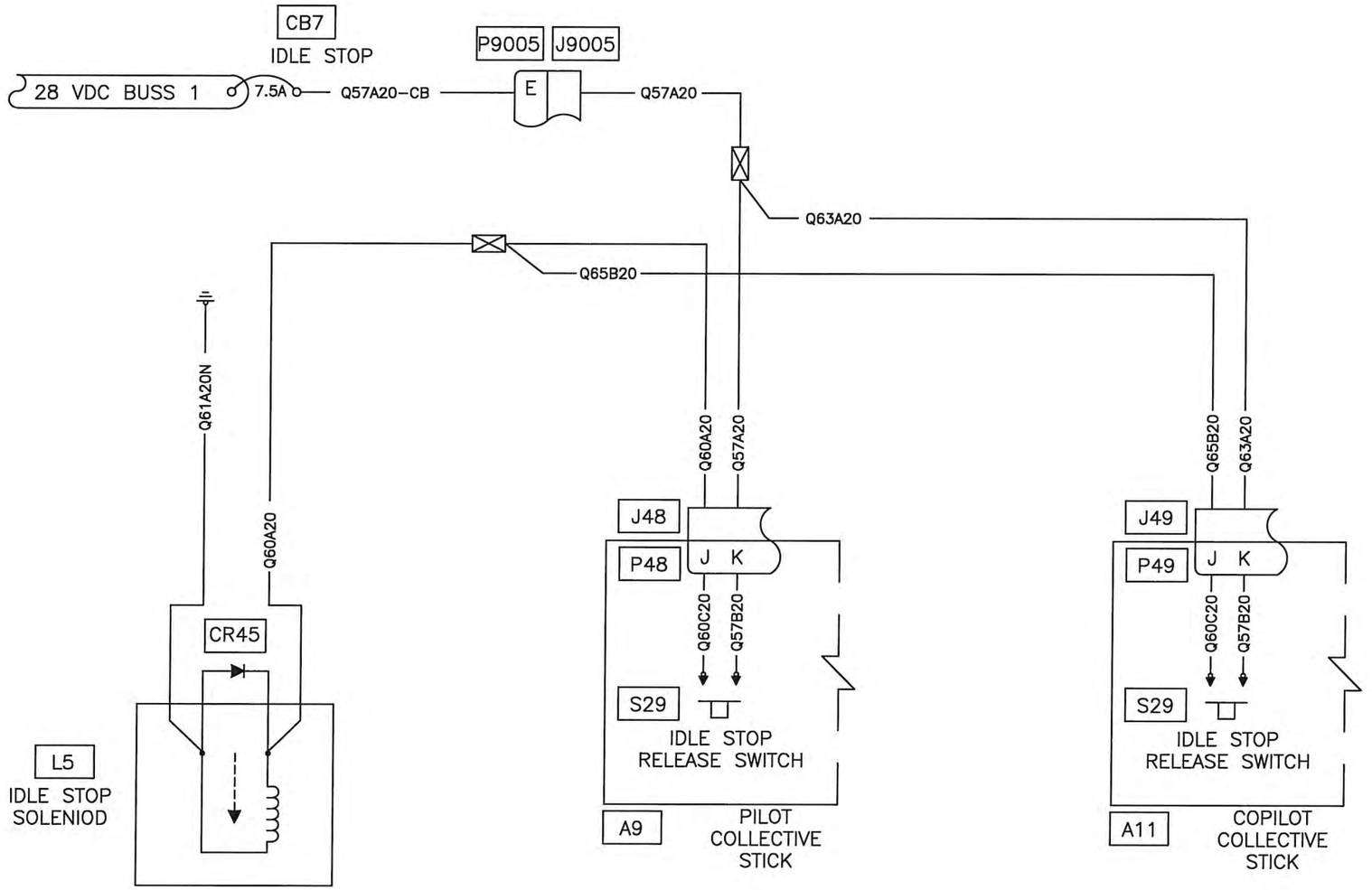

RELEASED
ECN20-105
2020.04.20

Figure 98–15S. IDLE STOP
(EFFECTIVE ON ALL S/N, EXCEPT 30687, 30931, 30576, 30817 & 30599)

DESIGN	DRAWN BY	DART AEROSPACE LTD HAWKESBURY, ONTARIO, CANADA	
RD	RD		
CHECKED	APPROVED	DRAWING NO.	REV. A
RD	KB	D212–725–2–G2	SHEET 6 OF 57
DATE		TITLE	SCALE
08.11.24		FIGURE 98–15S	NTS

Copyright 2008 by DART AEROSPACE LTD

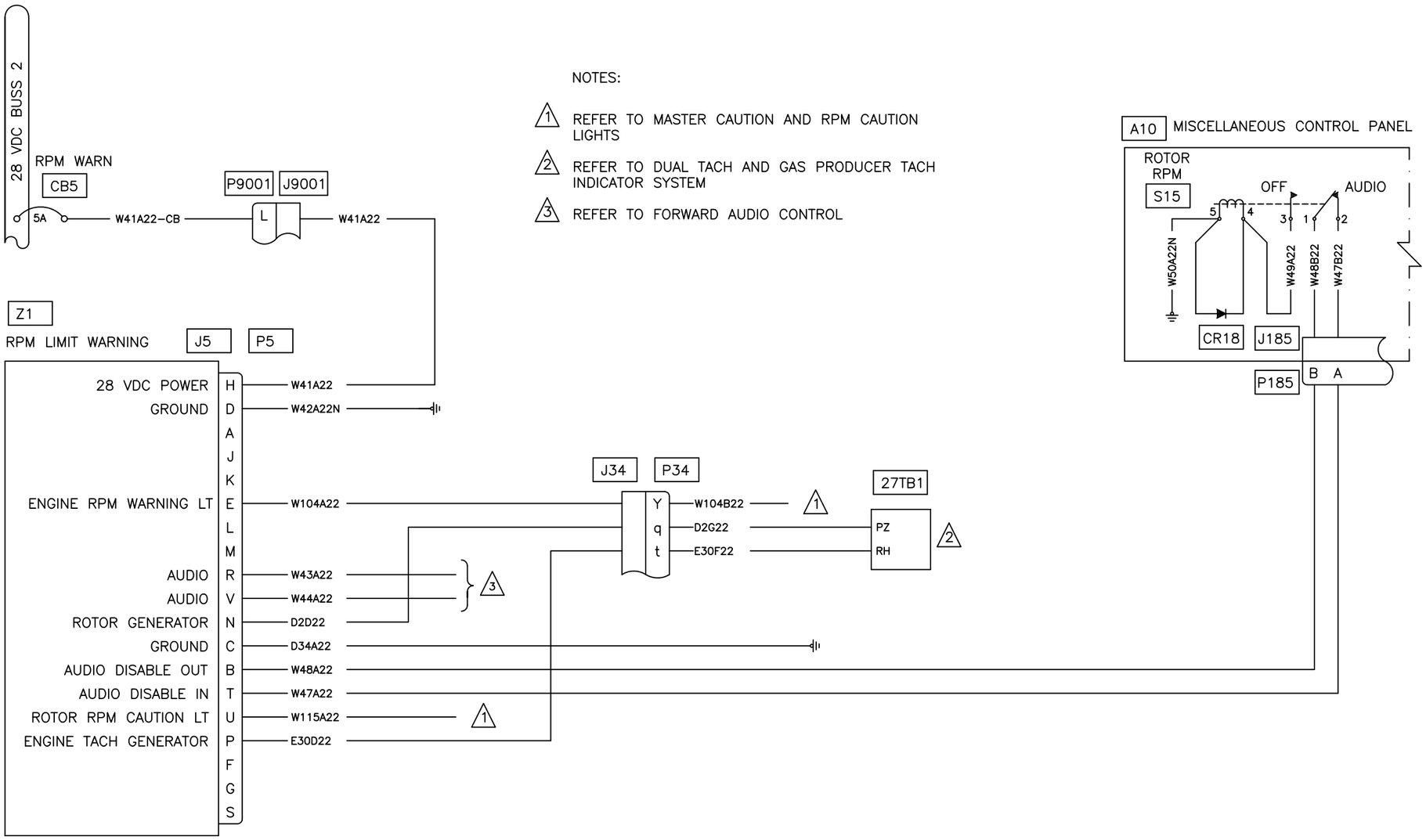

NOTES:

1. REFER TO MASTER CAUTION AND RPM CAUTION LIGHTS
2. REFER TO DUAL TACH AND GAS PRODUCER TACH INDICATOR SYSTEM
3. REFER TO FORWARD AUDIO CONTROL

Figure 98–17S. RPM LIMIT DETECTOR
(EFFECTIVE ON ALL S/N, EXCEPT 30687, 30817 & 30599)

DESIGN LW	N/A	EAGLE COPTERS MAINTENANCE LTD. CALGARY, ALBERTA, CANADA	
CHECKED EB	RELEASED MP	DRAWING NO. D212–725–2–G2	REV. B SHEET 7 OF 57
DATE 23–01–10		TITLE FIGURE 98–17S	SCALE NTS

Copyright 2023 by EAGLE COPTERS MAINTENANCE LTD.

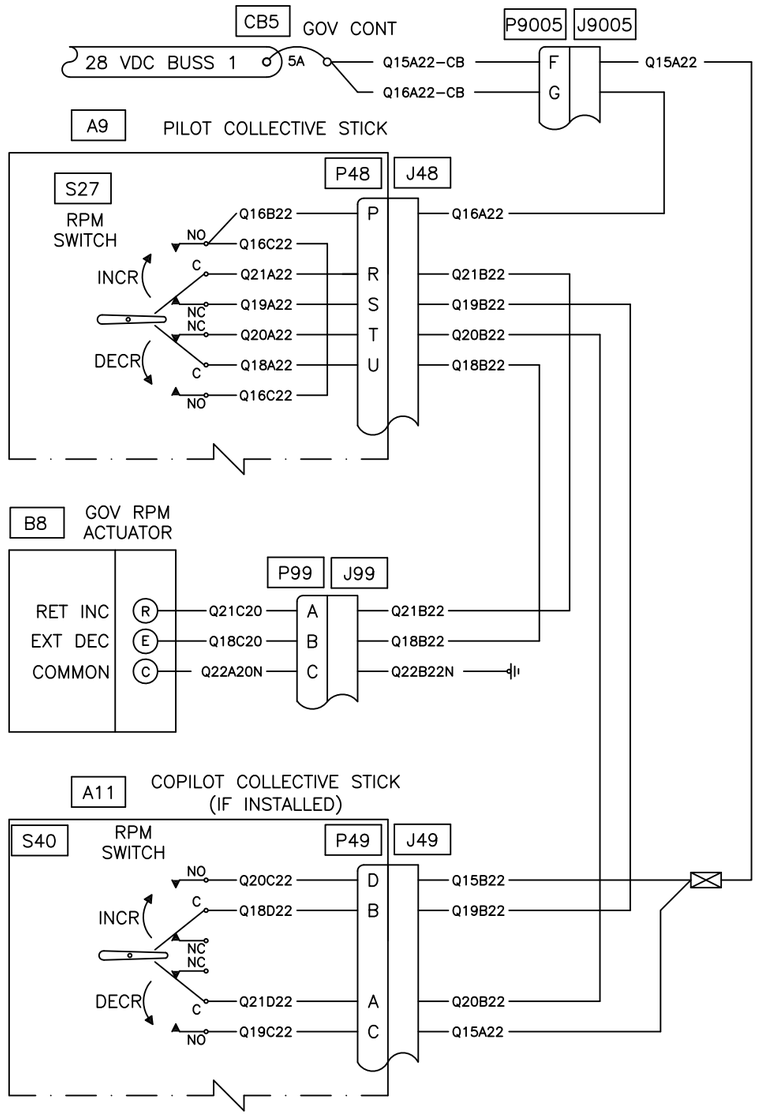

Figure 98-18S. GOVERNOR RPM
(EFFECTIVE ON ALL S/N, EXCEPT 30687, 30817 & 30599)

DESIGN LW	N/A	EAGLE COPTERS MAINTENANCE LTD. CALGARY, ALBERTA, CANADA	
CHECKED EB	RELEASED MP	DRAWING NO. D212-725-2-G2	REV. B SHEET 8 OF 57
DATE 23-01-10		TITLE FIGURE 98-18S	SCALE NTS

Copyright 2023 by EAGLE COPTERS MAINTENANCE LTD

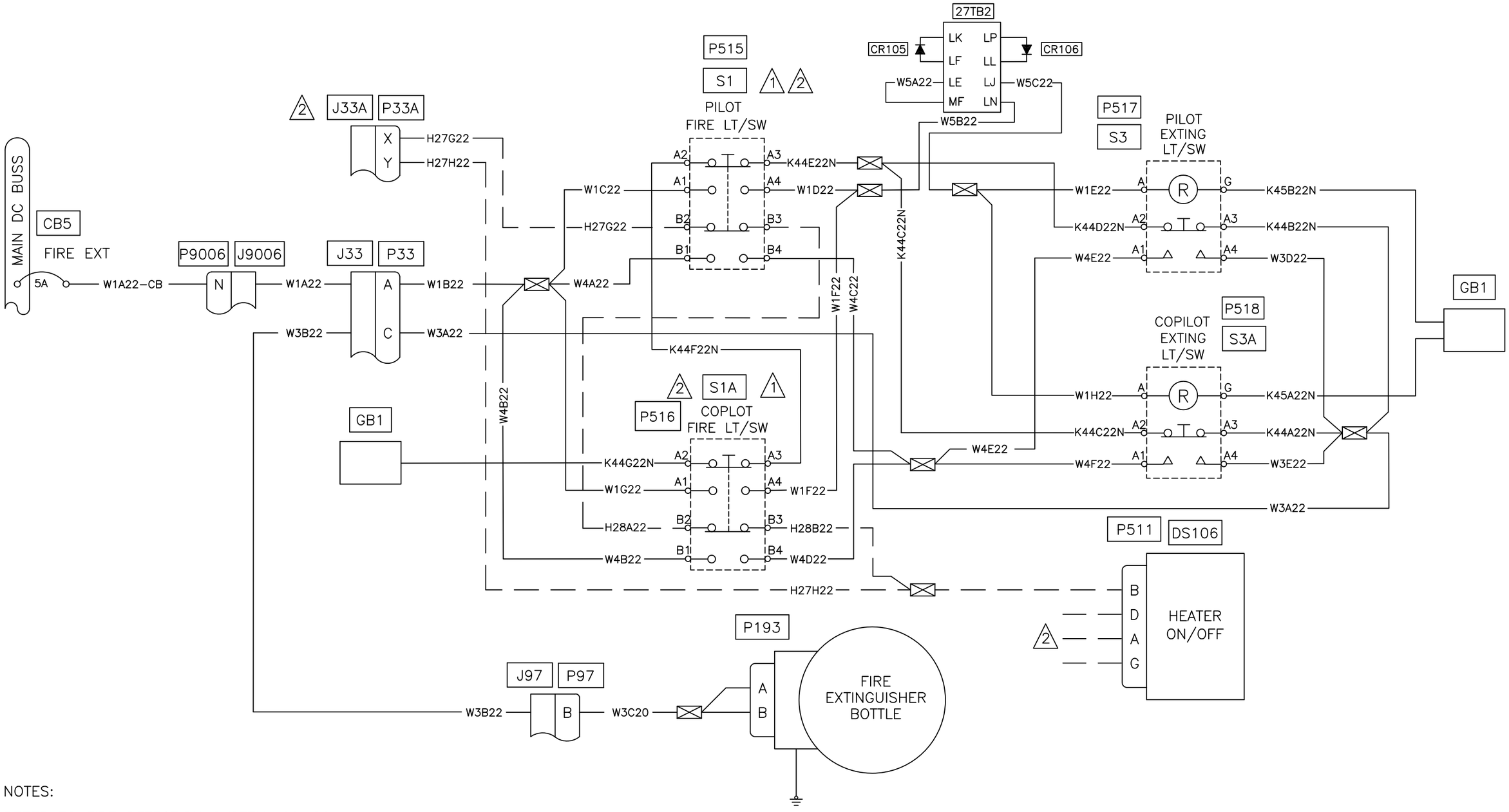

NOTES:

1. REFER TO FIRE DETECTION SYSTEM, 98–20, FOR LIGHT HOOKUP.
2. REFER TO HEATING/AIR CONDITIONING SYSTEM, 98–60 FOR ADDITIONAL SWITCH POSITION HOOKUP.

Figure 98–19S. FIRE EXTINGUISHER SYSTEM
(EFFECTIVE ON ALL S/N, EXCEPT 30687, 30817 & 30599)

DESIGN LW	N/A	EAGLE	EAGLE COPTERS MAINTENANCE LTD. CALGARY, ALBERTA, CANADA
CHECKED EB	RELEASED MP	DRAWING NO. D212–725–2–G2	REV. B SHEET 9 OF 57
DATE 23–01–10		TITLE FIGURE 98–19S	SCALE NTS

Copyright 2023 by EAGLE COPTERS MAINTENANCE LTD.

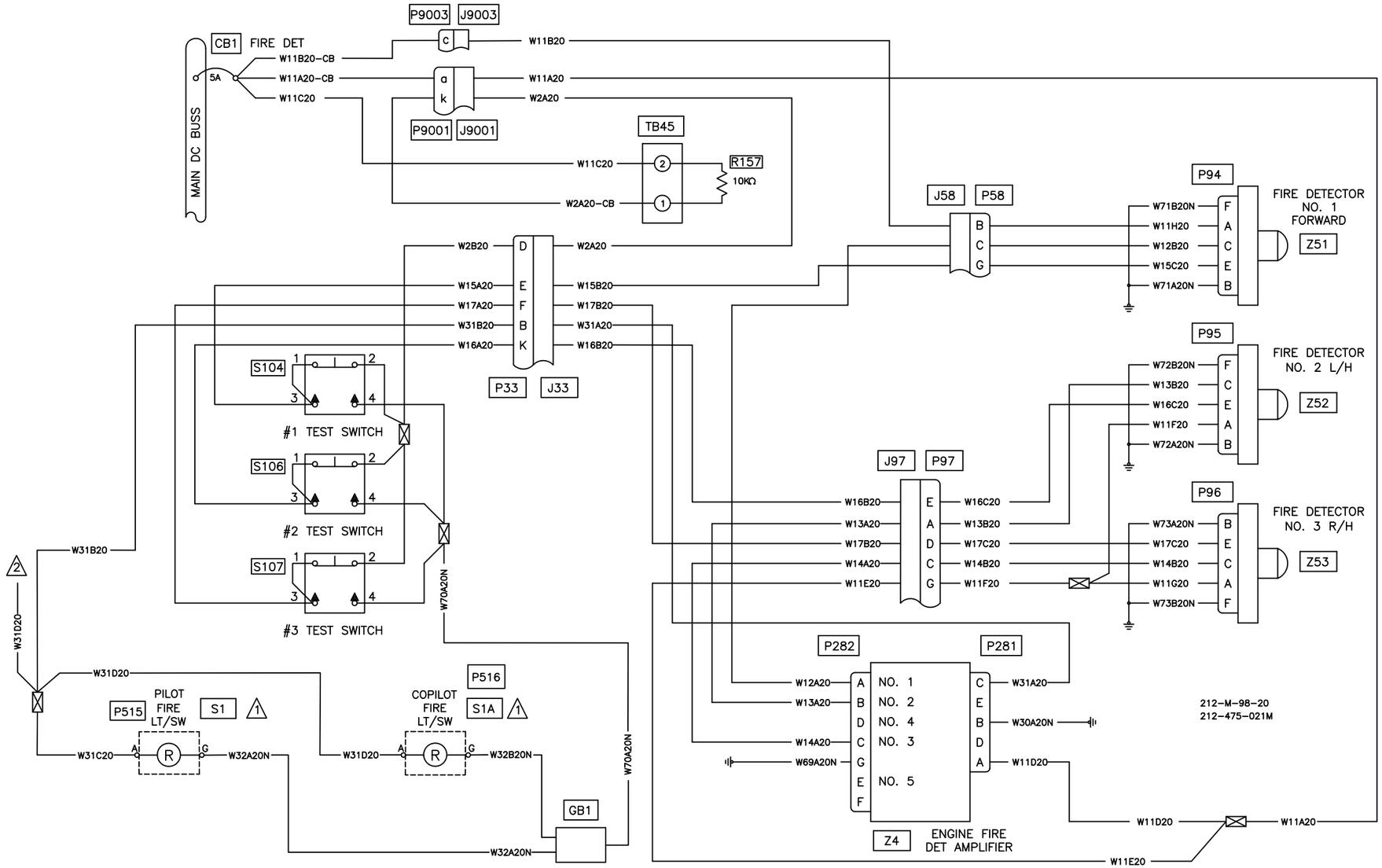

NOTES:

1. REFER TO 98-19, EXTINGUISHER SYSTEM AND 98-60, HEATER/AIR CONDITIONING SYSTEM FOR SWITCH OPERATION.
2. REFER TO VERTICAL REFERENCE DOOR WIRING DIAGRAM IF INSTALLED

Figure 98-20S. ENGINE FIRE DETECTION
(EFFECTIVE ON ALL S/N, EXCEPT 30687, 30817 & 30599)

DESIGN LW	N/A	EAGLE COPTERS MAINTENANCE LTD. CALGARY, ALBERTA, CANADA	
CHECKED EB	RELEASED MP	DRAWING NO. D212-725-2-G2	REV. C SHEET 10 OF 57
DATE 23-01-10		TITLE FIGURE 98-20S	SCALE NTS

Copyright 2023 by EAGLE COPTERS MAINTENANCE LTD

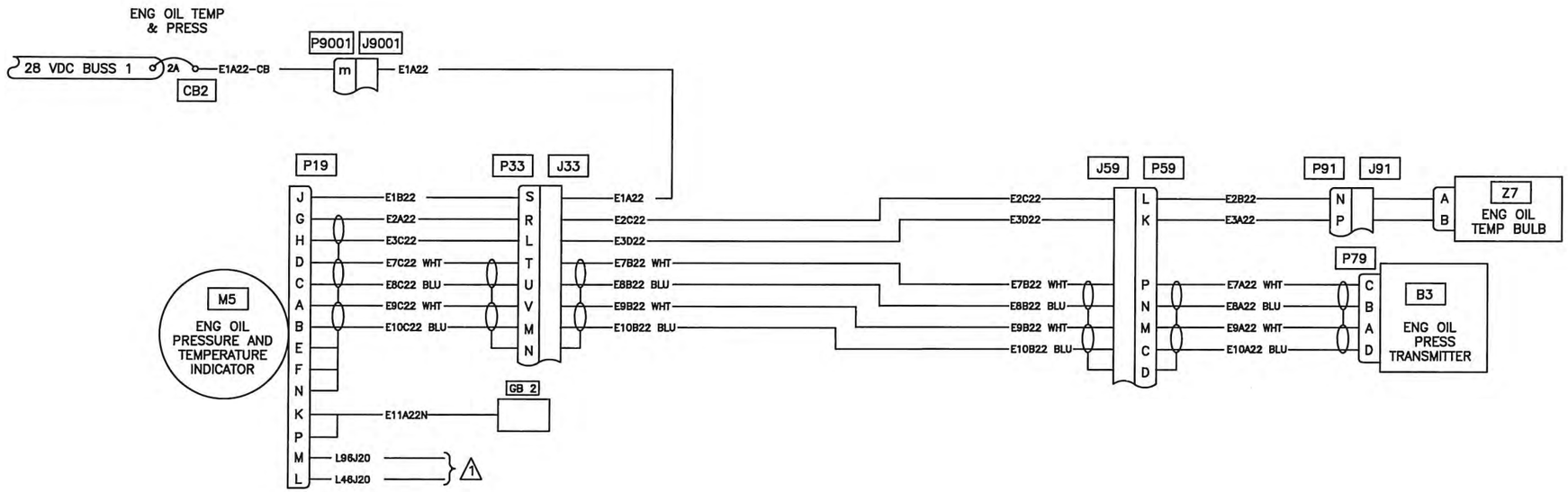

NOTES:

1. REFER TO ENGINE INSTRUMENT LIGHTS
2. REFER TO COMPONENT REPLACEMENT

RELEASED
ECN 20-105
2020.09.20

Figure 98-21S. ENGINE & TRANSMISSION PRESSURE AND TEMPERATURE INDICATORS
(EFFECTIVE ON ALL S/N, EXCEPT 30687, 30931, 30576, 30817 & 30599)

DESIGN: RD	DRAWN BY: RD	DART AEROSPACE LTD, HAWKESBURY, ONTARIO, CANADA	
CHECKED: RD	APPROVED: KB	DRAWING NO.: D212-725-2-G2	REV. B
DATE: 10.08.10		TITLE: FIGURE 98-21S	SHEET 11 OF 57
			SCALE: NTS

Copyright 2008 by DART AEROSPACE LTD

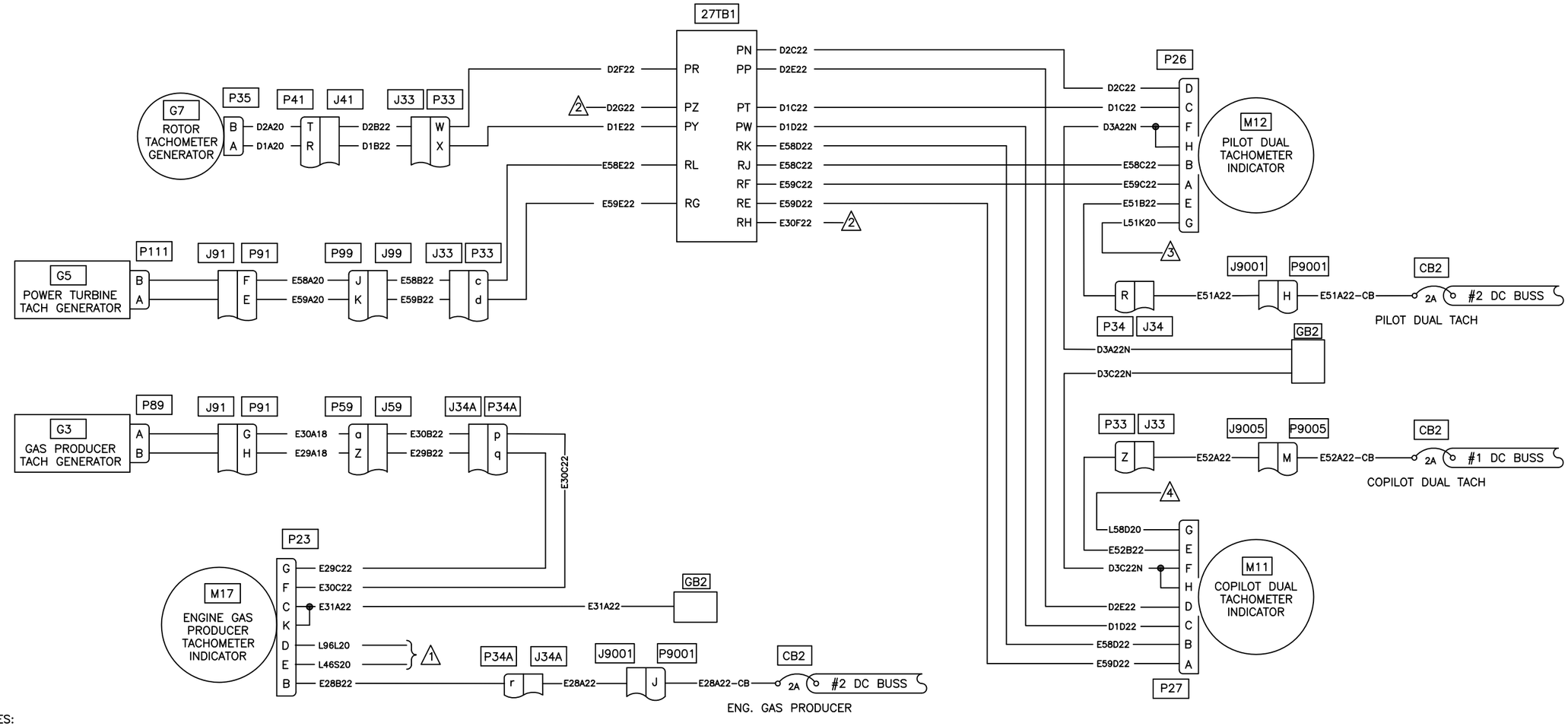

NOTES:

1. REFER TO ENGINE INSTRUMENT LIGHTS WIRING DIAGRAM 98–36S
2. REFER TO RPM LIMIT DETECTOR WIRING DIAGRAM 98–17S
3. REFER TO PILOTS INSTRUMENT LIGHTING WIRING DIAGRAM 98–34S
4. REFER TO COPILOTS INSTRUMENT LIGHTING WIRING DIAGRAM 98–35S

Figure 98–22S. DUAL TACHOMETER AND GAS PRODUCER TACHOMETER INDICATOR SYSTEM
(EFFECTIVE ON ALL S/N, EXCEPT 30687, 30817 & 30599)

DESIGN LW	N/A	EAGLE COPTERS MAINTENANCE LTD. CALGARY, ALBERTA, CANADA	
CHECKED EB	RELEASED MP	DRAWING NO. D212–725–2–G2	REV. B SHEET 12 OF 57
DATE 23–01–10		TITLE FIGURE 98–22S	SCALE NTS

Copyright 2023 by EAGLE COPTERS MAINTENANCE LTD

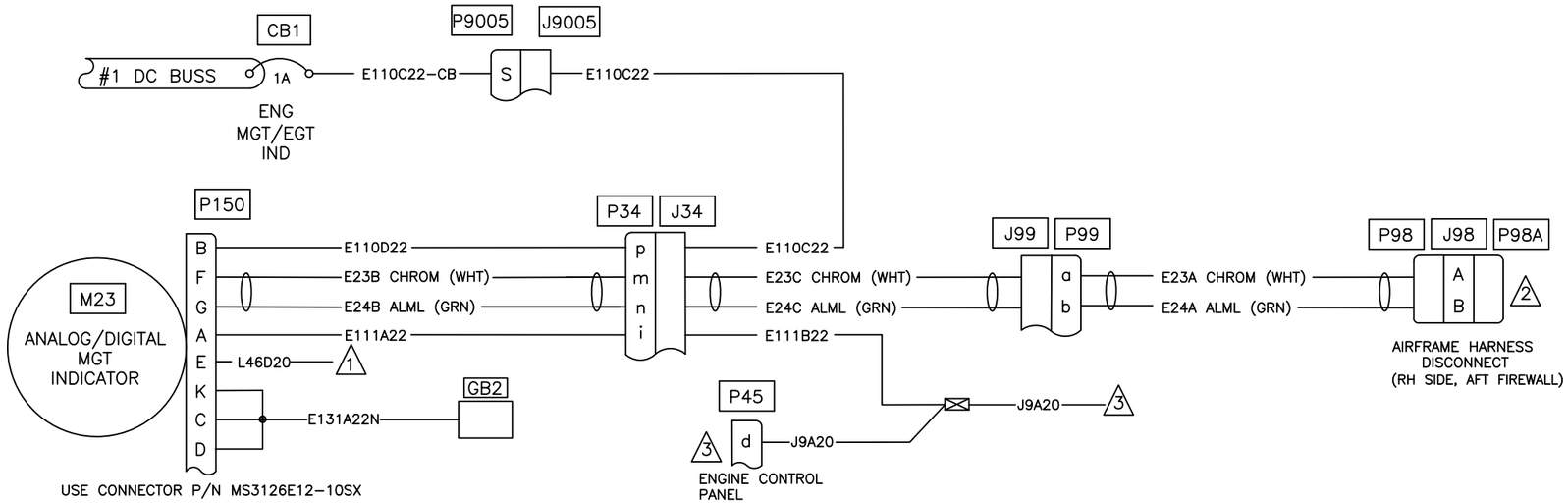

NOTES:

1. REFER TO ENGINE INSTRUMENT LIGHTS WIRING DIAGRAM 98-36S.
2. REFER TO ENGINE MANUFACTURER'S MAINTENANCE MANUAL
3. REFER TO ENGINE START WIRING DIAGRAM 98-14S.

Figure 98-23S. MGT/EGT INDICATION SYSTEM
(EFFECTIVE ON ALL S/N, EXCEPT 30687, 30817 & 30599)

DESIGN LW	N/A	EAGLE COPTERS MAINTENANCE LTD. CALGARY, ALBERTA, CANADA	
CHECKED EB	RELEASED MP	DRAWING NO. D212-725-2-G2	REV. B SHEET 13 OF 57
DATE 23-01-10		TITLE FIGURE 98-23S	SCALE NTS

Copyright 2023 by EAGLE COPTERS MAINTENANCE LTD

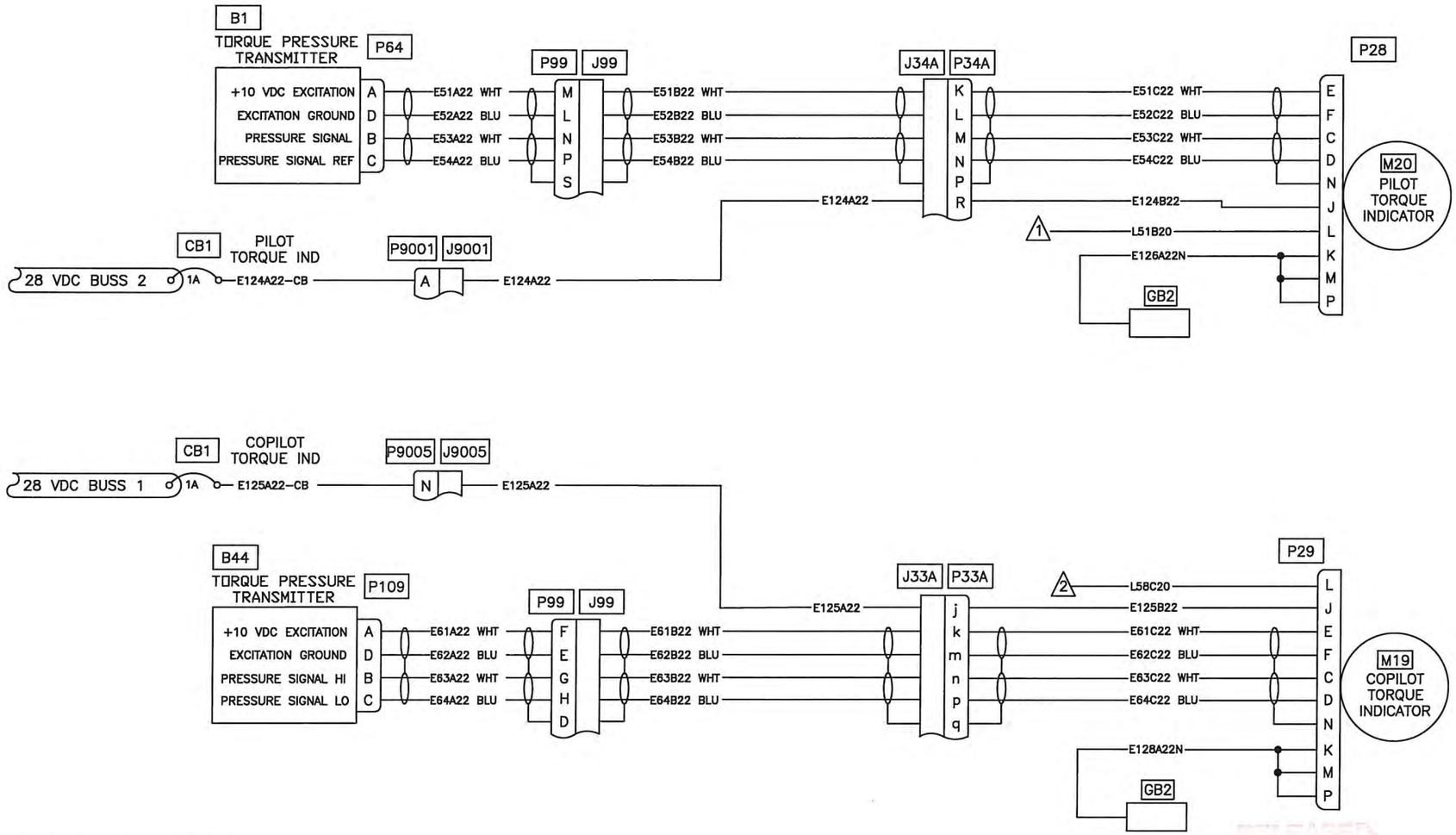

NOTES:

1. REFER TO PILOTS INSTRUMENT LIGHTING WIRING DIAGRAM 98–34S.
2. REFER TO COPILOTS INSTRUMENT LIGHTING WIRING DIAGRAM 98–35S.

RELEASED
ECN 20-105
2020.04.20

Figure 98–24S. TORQUE INDICATOR SYSTEM
(EFFECTIVE ON ALL S/N, EXCEPT 30687, 30931, 30576, 30817 & 30599)

DESIGN	DRAWN BY	DART AEROSPACE LTD HAWKESBURY, ONTARIO, CANADA	
RD	RD		
CHECKED	APPROVED	DRAWING NO.	REV. B
RD		D212–725–2–G2	SHEET 14 OF 57
DATE		TITLE	SCALE
10.08.10		FIGURE 98–24S	NTS

Copyright 2008 by DART AEROSPACE LTD

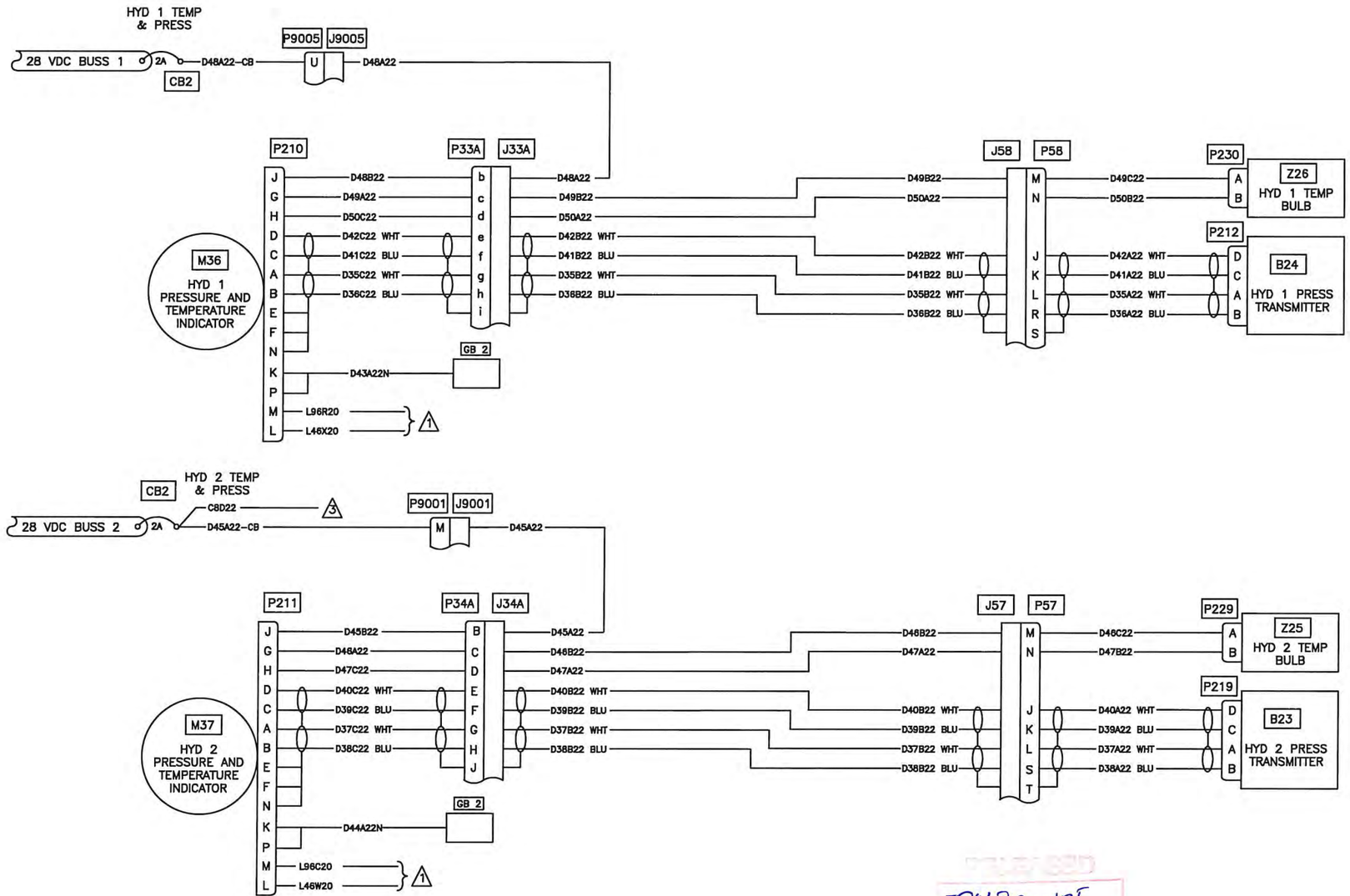

NOTES:

1. REFER TO ENGINE INSTRUMENT LIGHTS
2. REFER TO COMPONENT REPLACEMENT
3. REFER TO HYDRAULIC SYSTEM

Figure 98–25S. HYDRAULIC PRESSURE AND TEMPERATURE INDICATORS
(EFFECTIVE ON ALL S/N, EXCEPT 30687, 30931, 30576, 30817 & 30599)

ECN 20-105
2020.04.20

DESIGN: RD	DRAWN BY: RD	DART AEROSPACE LTD, HAWKESBURY, ONTARIO, CANADA	
CHECKED: RD	APPROVED: KH	DRAWING NO.: D212-725-2-G2	REV. B
DATE: 10.08.10		TITLE: FIGURE 98-25S	SCALE: NTS
			SHEET 15 OF 57

Copyright 2008 by DART AEROSPACE LTD

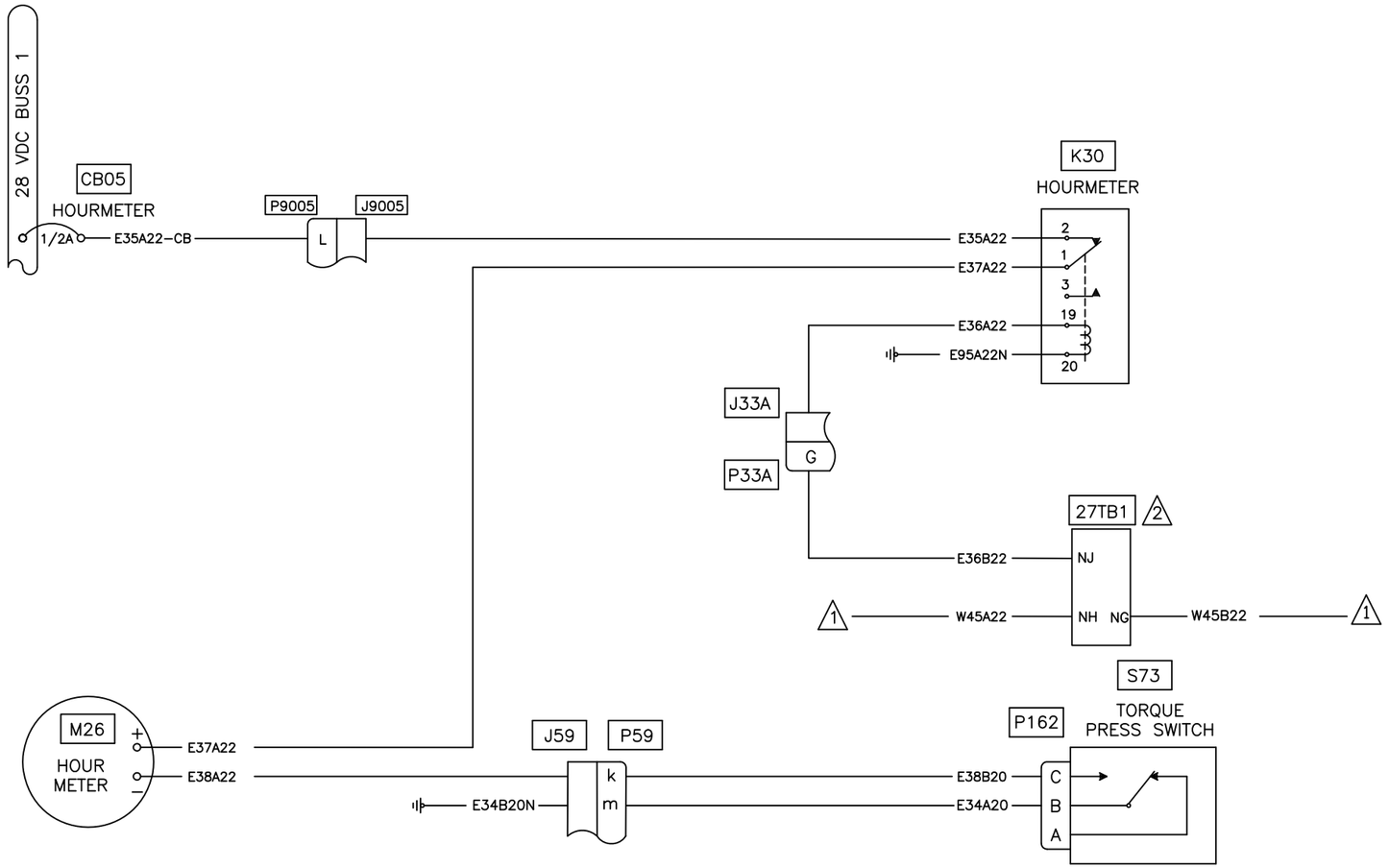

NOTES:

1. REFER TO MASTER CAUTION AND RPM CAUTION LIGHTS
2. REFER TO COMPONENT REPLACEMENT

Figure 98-26S. HOURMETER
(EFFECTIVE ON ALL S/N, EXCEPT 30687, 30931, 30576, 30817 & 30599)

DESIGN LW	N/A	EAGLE COPTERS MAINTENANCE LTD. CALGARY, ALBERTA, CANADA	
CHECKED EB	RELEASED MP	DRAWING NO. D212-725-2-G2	REV. C SHEET 16 OF 57
DATE 23-01-10		TITLE FIGURE 98-26S	SCALE NTS

Copyright 2023 by EAGLE COPTERS MAINTENANCE LTD

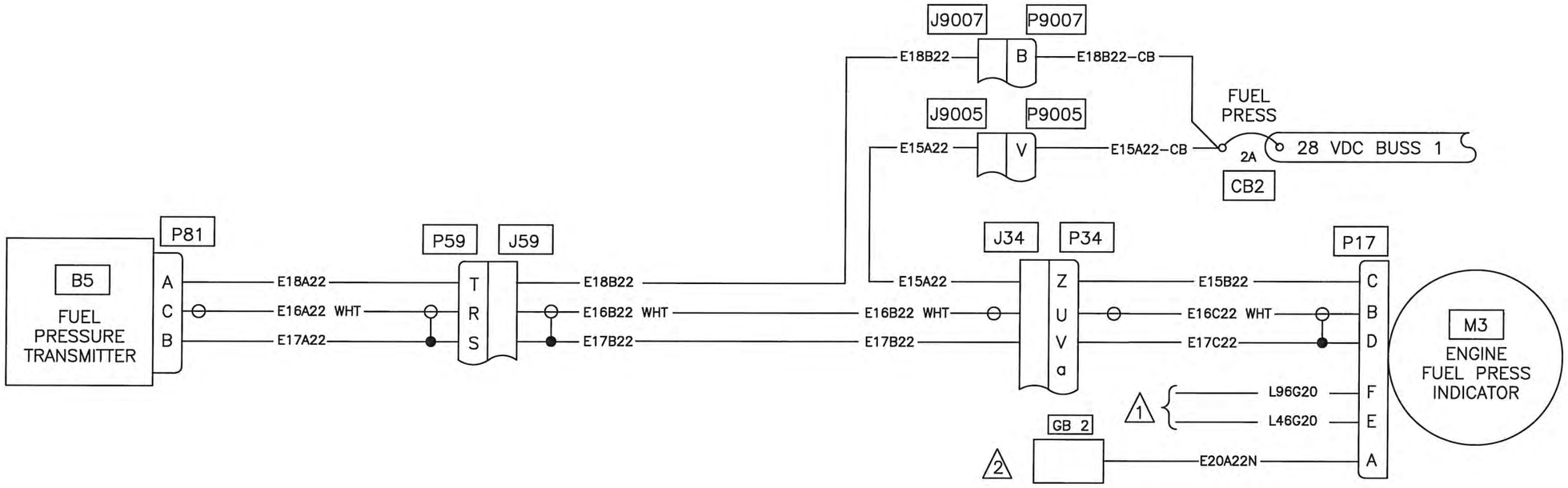

NOTES:

1. REFER TO ENGINE INSTRUMENT LIGHTS
2. REFER TO COMPONENT REPLACEMENT

Figure 98–27S. ENGINE FUEL PRESSURE INDICATOR SYSTEM
(EFFECTIVE ON ALL S/N, EXCEPT 30687, 30931, 30576, 30817 & 30599)

ECN 20-105
2020.04.20

DESIGN: RD	DRAWN BY: RD	DART AEROSPACE LTD, HAWKESBURY, ONTARIO, CANADA	
CHECKED: RD	APPROVED: KAB	DRAWING NO.: D212–725–2–G2	REV. A
DATE: 08.11.24		TITLE: FIGURE 98–27S	SHEET 17 OF 57 / SCALE: NTS

Copyright 2008 by DART AEROSPACE LTD

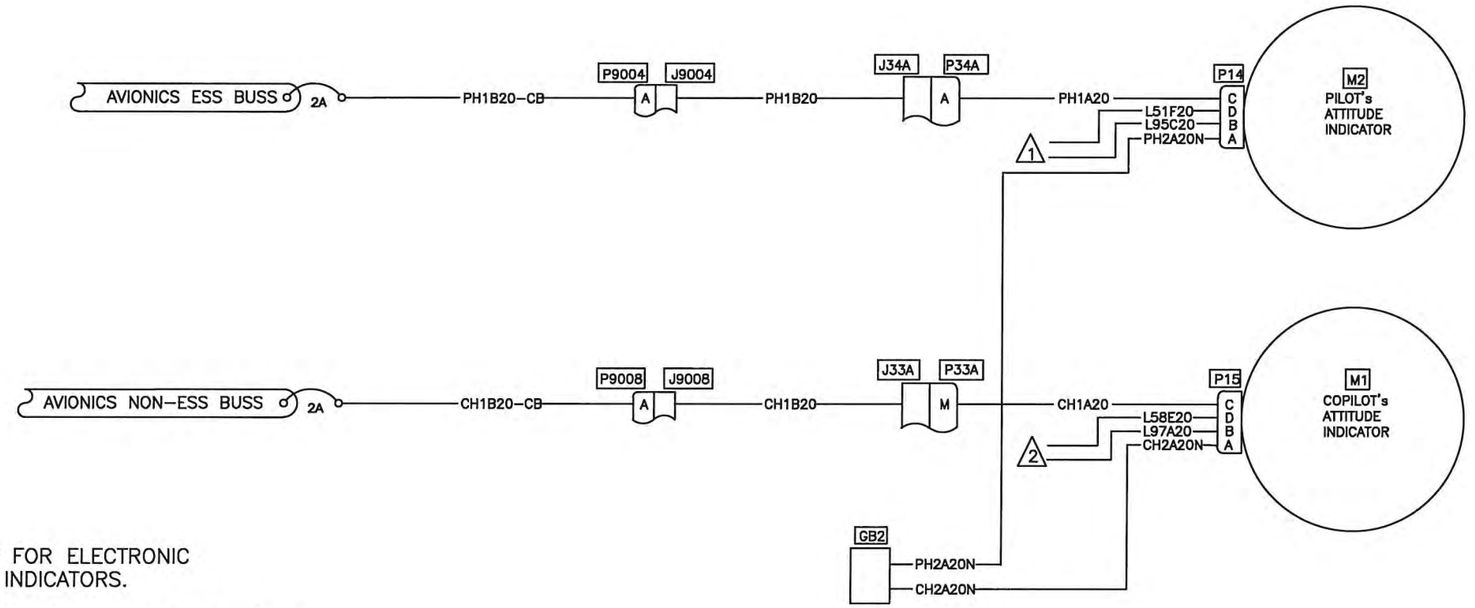

WIRING HOOKUP FOR ELECTRONIC ATTITUDE INDICATORS.

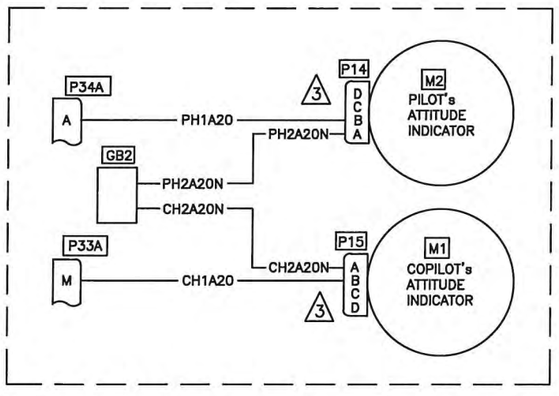

NOTES:

1. REFER TO PILOT's INSTRUMENT LIGHTING
2. REFER TO COPILOT's INSTRUMENT LIGHTING
3. LIGHTING NOT REQUIRED ON ELECTRONIC ATTITUDE INDICATORS.

ECN 20-105
2020.04.20

Figure 98-28S. PILOT AND COPILOT ATTITUDE INDICATORS
(EFFECTIVE ON ALL S/N, EXCEPT 30687, 30931, 30576, 30817 & 30599)

DESIGN	DRAWN BY	DART AEROSPACE LTD HAWKESBURY, ONTARIO, CANADA	
RD	RD		
CHECKED	APPROVED	DRAWING NO.	REV. B
RD	KB	D212-725-2-G2	SHEET 18 OF 57
DATE		TITLE	SCALE
10.08.10		FIGURE 98-28S	NTS

Copyright 2008 by DART AEROSPACE LTD

NOTES:

1. REFER TO PILOT's INSTRUMENT LIGHTING
2. LIGHTING NOT REQUIRED ON ELECTRONIC HEADING INDICATORS.

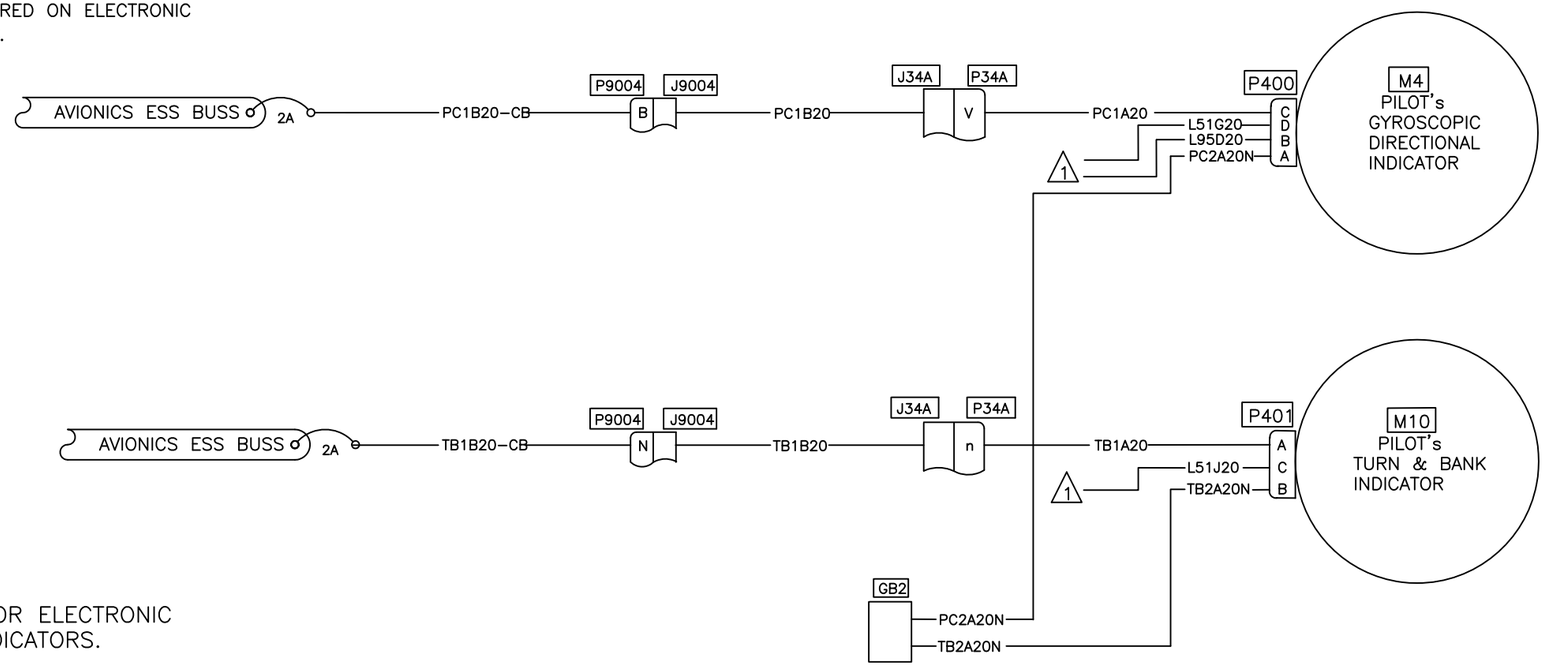

WIRING HOOKUP FOR ELECTRONIC HEADING INDICATORS.

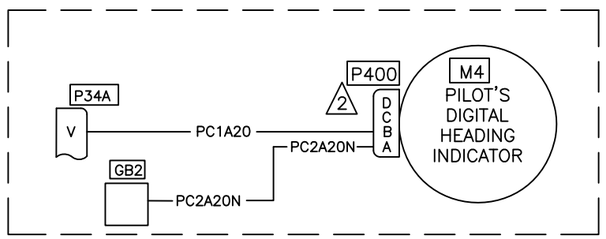

Figure 98–29S. PILOT'S TURN & BANK AND GYRO DIRECTIONAL INDICATORS
(EFFECTIVE ON ALL S/N, EXCEPT 30687, 30817 & 30599)

DESIGN LW	N/A	EAGLE COPTERS MAINTENANCE LTD. CALGARY, ALBERTA, CANADA	
CHECKED EB	RELEASED MP	DRAWING NO. D212–725–2–G2	REV. B SHEET 19 OF 57
DATE 23–01–10		TITLE FIGURE 98–29S	SCALE NTS

Copyright 2023 by EAGLE COPTERS MAINTENANCE LTD

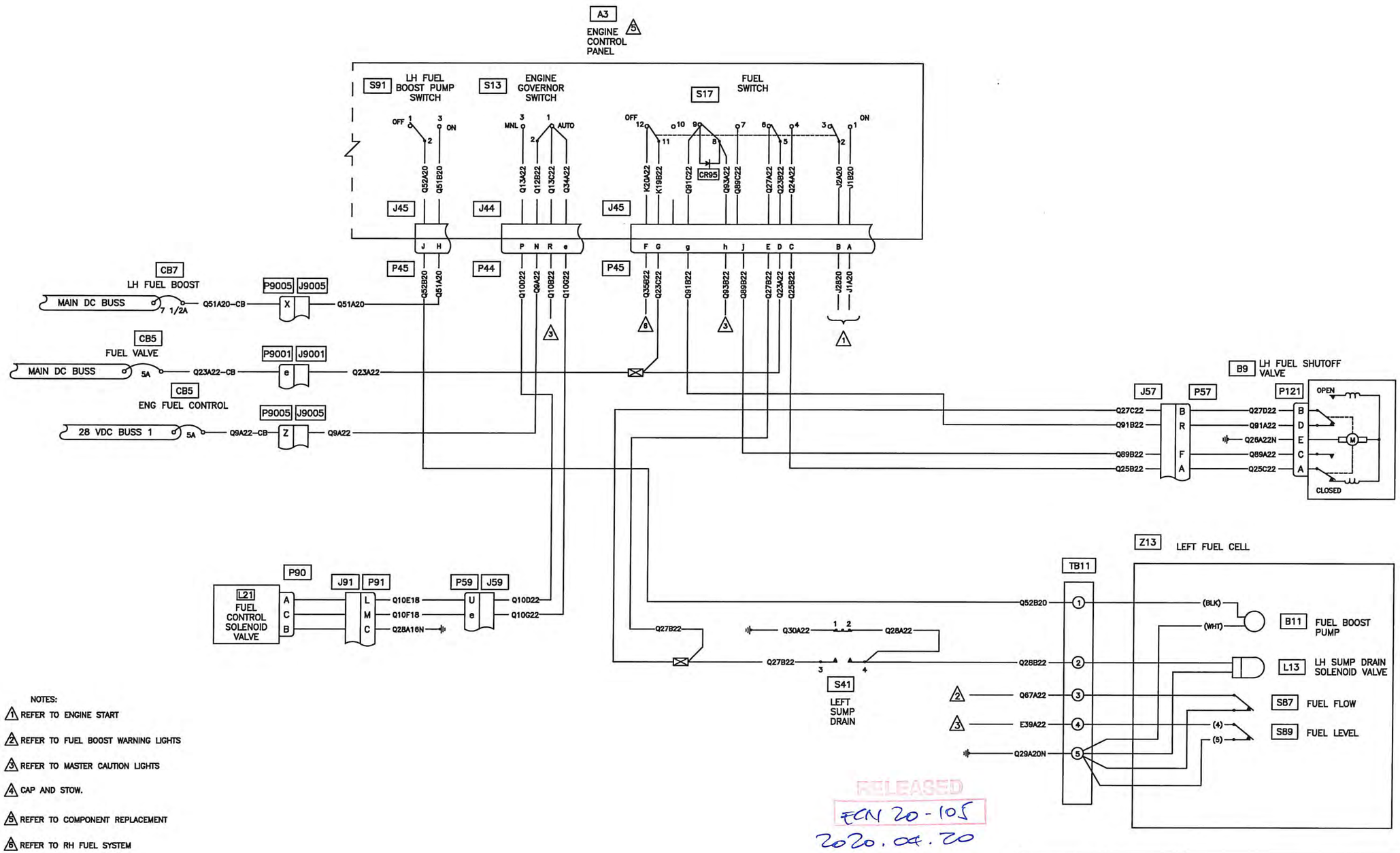

NOTES:

1. REFER TO ENGINE START
2. REFER TO FUEL BOOST WARNING LIGHTS
3. REFER TO MASTER CAUTION LIGHTS
4. CAP AND STOW.
5. REFER TO COMPONENT REPLACEMENT
6. REFER TO RH FUEL SYSTEM
7. INSERT JUMPER TO PREVENT MASTER CAUTION SEGMENT FROM ILLUMINATING.

RELEASED
ECN 20-105
2020.04.20

Figure 98-30S. LH FUEL SYSTEM
(EFFECTIVE ON ALL S/N, EXCEPT 30687, 30931, 30576, 30817 & 30599)

DESIGN	DRAWN BY	DART AEROSPACE LTD HAWKESBURY, ONTARIO, CANADA	
RD	RD		
CHECKED	APPROVED	DRAWING NO.	REV. B
RD	KB	D212-725-2-G2	SHEET 20 OF 57
DATE		TITLE	SCALE
10.08.10		FIGURE 98-30S	NTS

Copyright 2008 by DART AEROSPACE LTD

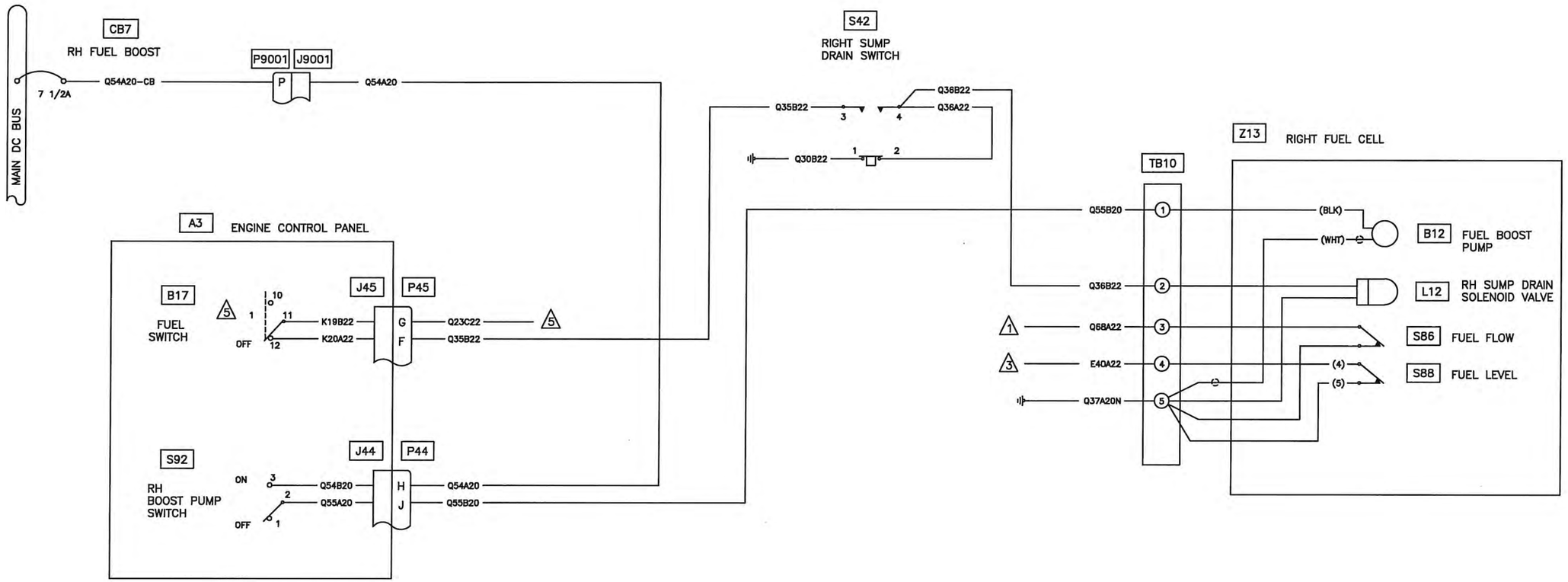

NOTES:

1. REFER TO FUEL BOOST WARNING LIGHTS
2. REFER TO ENGINE START
3. REFER TO MASTER CAUTION LIGHTS
4. DELETED
5. REFER TO LH FUEL SYSTEM

RELEASED
ECN 20-105
2020.04.20

Figure 98-31S. RH FUEL SYSTEM
(EFFECTIVE ON ALL S/N, EXCEPT 30687, 30931, 30576, 30817 & 30599)

DESIGN: RD	DRAWN BY: RD	DART AEROSPACE LTD, HAWKESBURY, ONTARIO, CANADA	
CHECKED: RD	APPROVED: KD	DRAWING NO.: D212-725-2-G2	REV. A
DATE: 08.11.24		TITLE: FIGURE 98-31S	SHEET 21 OF 57 / SCALE: NTS

Copyright 2008 by DART AEROSPACE LTD

ENGINE CONTROL PANEL MODIFICATION

1. REMOVE GOVERNOR #1 SWITCH AND WIRING.
2. REMOVE PARTICLE SEPARATOR #2 SWITCH AND WIRING.
3. REMOVED RH FUEL VALVE SWITCH AND WIRING.
4. REMOVE FUEL X–FEED SWITCH AND WIRING. REMOVE DIDODES FROM TB4 AND REMOVE RELAY.
5. REMOVE FUEL X–FEED TEST SWITCH AND WIRING.
6. MOVE LH FUEL VALVE SWITCH TO CENTER POSITION WHERE TEST SWITCH WAS.

GOVERNOR #2 SWITCH WIRING CHANGE

1. REMOVED WIRE Q34A22N FROM '1'
2. REMOVE DIODE FROM BETWEEN '1' & '2'
3. MOVE WIRES Q13C22 & Q13A22 FROM '2' TO '3'
4. MOVE WIRE Q12B22 FROM '3' TO '2'
5. ADD WIRE Q34A22 FROM '1' TO J44, PIN e.

FUEL VALVE SWITCH WIRING CHANGE

1. REMOVE WIRE K20A22 FROM 'NO' POSITION ON SECTION 1 OF SWITCH AND MOVE TO 'NC' POSITION. LEAVE WIRE IN J45, PIN F.

FUEL BOOST MASTER CAUTION WIRING CHANGE

1. REMOVE Q67B22 FROM TERMINAL 8 ON TB4 AND INSTALL ON TERMINAL 7 ALONG WITH Q79B22.
2. REMOVE Q68B22 FROM TERMINAL 5 ON TB4 AND INSTALL ON TERMINAL 4 ALONG WITH Q80B22.

ENGINE DE–ICE SWITCH WIRING CHANGE

1. INSTALL SWITCH (MS24523–22) IN OLD GOVERNOR #1 POSITION.
2. ADD WIRE H60C16 FROM '2' ON SWITCH TO J45, PIN L.
3. ADD WIRE H61C16 FROM '3' ON SWITCH TO J45, PIN M.

△7 START FUEL SWITCH (POST S.T.C.)

1. REMOVE WIRES K31D22, K50B22, AND K10A22 FROM SWITCH. CAP AND STOW WIRES.

FUEL INTCON SWITCH WIRING CHANGE

1. REMOVE EXISTING FUEL INTCON SWITCH.
2. INSTALL WIRES AS PER DIAGRAM.

A3

ENGINE CONTROL PANEL (MODIFIED)

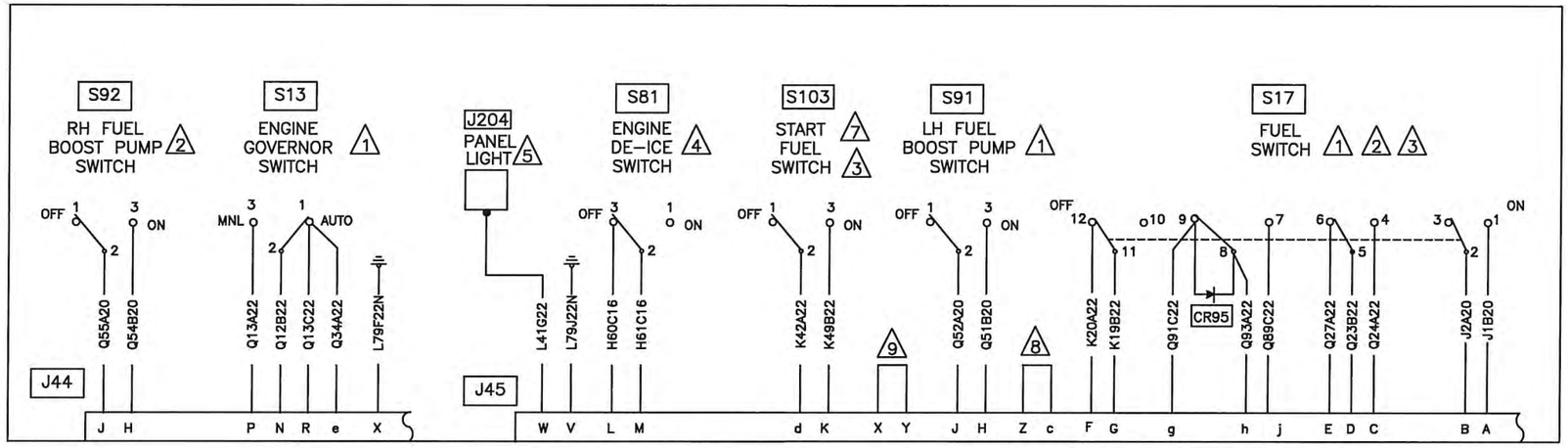

NOTES:

△1 REFER TO WIRING DIAGRAM 98–30
△2 REFER TO WIRING DIAGRAM 98–31
△3 REFER TO WIRING DIAGRAM 98–14
△4 REFER TO WIRING DIAGRAM 98–65
△5 REFER TO WIRING DIAGRAM 98–39
△6 DELETED
△7 SWITCH INSTALLED AS PER START FUEL STC.
△8 REFER TO WIRING DIAGRAM 98–38, Sheet 1
△9 REFER TO WIRING DIAGRAM 98–38, Sheet 3

FIG. 98–32S ENGINE CONTROL PANEL(Modified)
(EFFECTIVE ON ALL S/N, EXCEPT 30687, 30931, 30576, 30817 & 30599)

ECN 20-105
2020.04.20

DESIGN	DRAWN BY	DART AEROSPACE LTD HAWKESBURY, ONTARIO, CANADA	
RD	RD		
CHECKED	APPROVED	DRAWING NO.	REV. A
RD		D212–725–2–G2	SHEET 22 OF 57
DATE		TITLE	SCALE
08.11.24		FIGURE 98–32S	NTS

Copyright 2008 by DART AEROSPACE LTD

NOTES:

1. REFER TO ENGINE INSTRUMENT LIGHTS

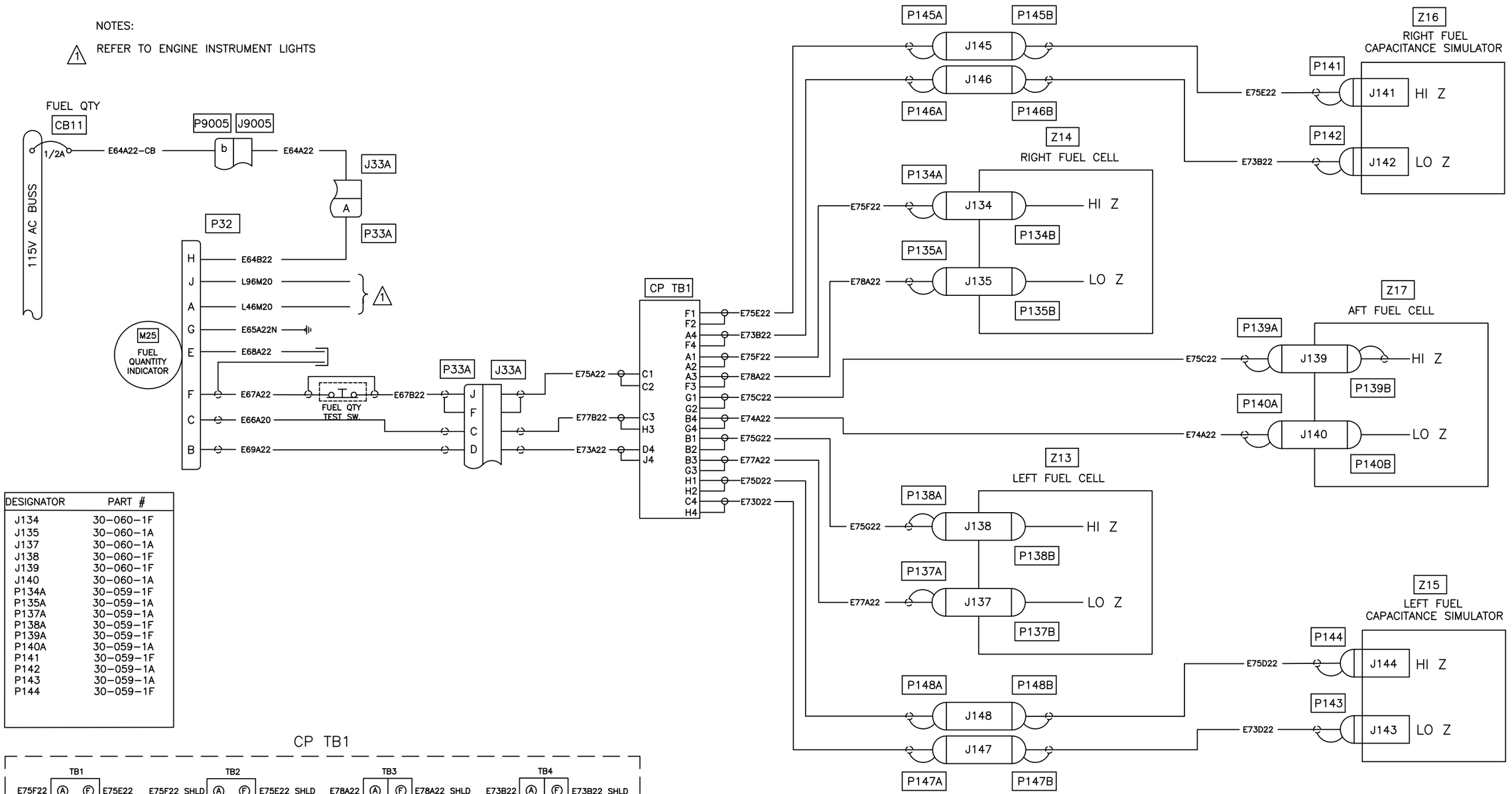

DESIGNATOR	PART #
J134	30-060-1F
J135	30-060-1A
J137	30-060-1A
J138	30-060-1F
J139	30-060-1F
J140	30-060-1A
P134A	30-059-1F
P135A	30-059-1A
P137A	30-059-1A
P138A	30-059-1F
P139A	30-059-1F
P140A	30-059-1A
P141	30-059-1F
P142	30-059-1A
P143	30-059-1A
P144	30-059-1F

CP TB1

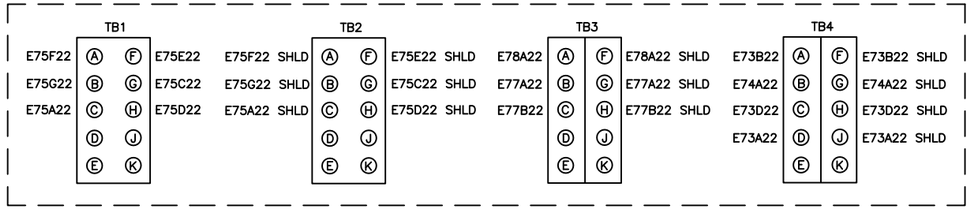

Figure 98-33S. FUEL QUANTITY INDICATION SYSTEM
(EFFECTIVE ON ALL S/N, EXCEPT 30687, 30817 & 30599)

DESIGN LW	N/A	EAGLE COPTERS MAINTENANCE LTD. CALGARY, ALBERTA, CANADA	
CHECKED EB	RELEASED MP	DRAWING NO. D212-725-2-G2	REV. C SHEET 23 OF 57
DATE 23-01-10		TITLE FIGURE 98-33S	SCALE NTS

Copyright 2023 by EAGLE COPTERS MAINTENANCE LTD

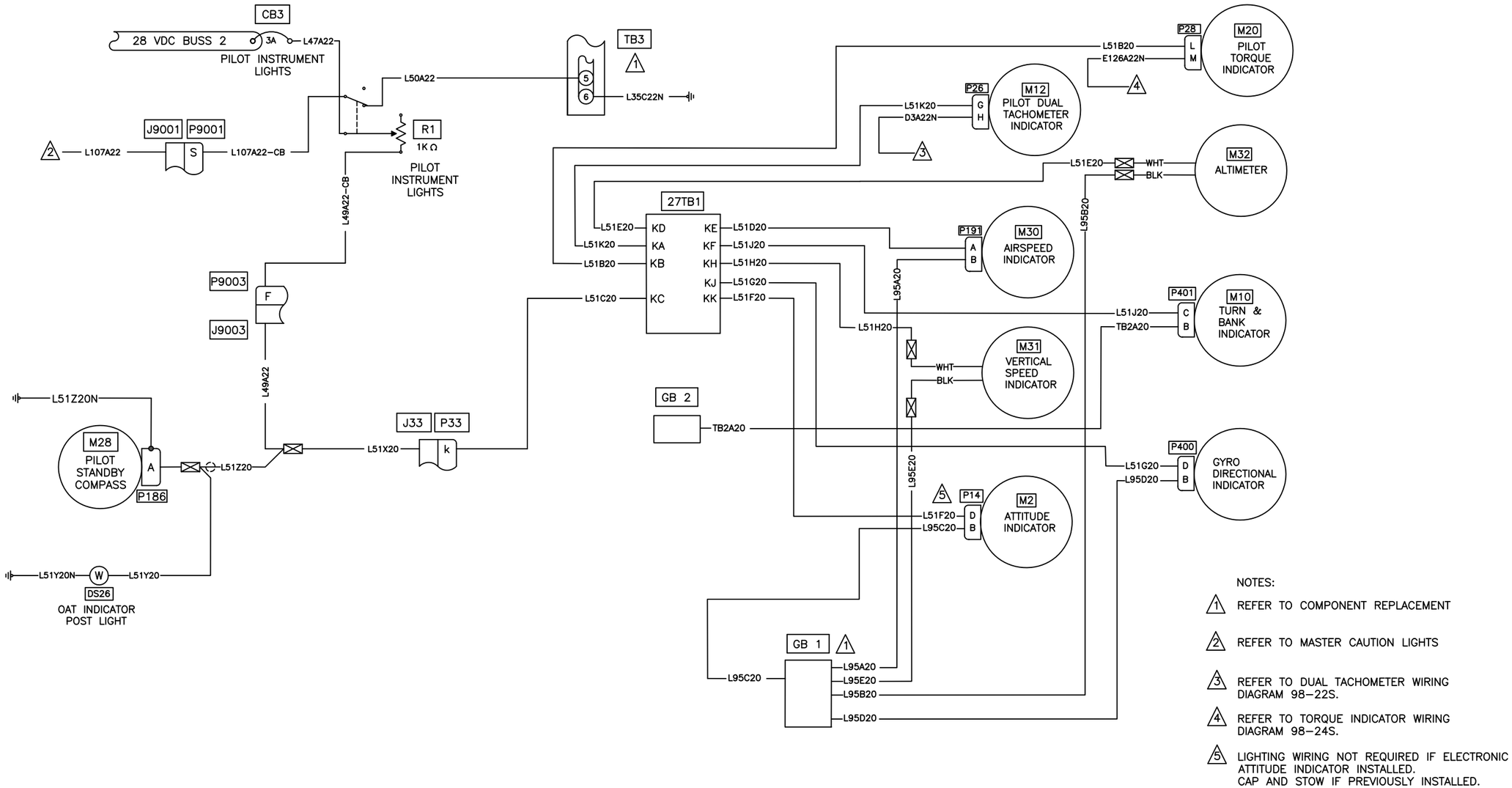

NOTES:

1. REFER TO COMPONENT REPLACEMENT
2. REFER TO MASTER CAUTION LIGHTS
3. REFER TO DUAL TACHOMETER WIRING DIAGRAM 98–22S.
4. REFER TO TORQUE INDICATOR WIRING DIAGRAM 98–24S.
5. LIGHTING WIRING NOT REQUIRED IF ELECTRONIC ATTITUDE INDICATOR INSTALLED. CAP AND STOW IF PREVIOUSLY INSTALLED.

Figure 98–34S. PILOT INSTRUMENT LIGHTS
(EFFECTIVE ON ALL S/N, EXCEPT 30687, 30931, 30576, 30817 & 30599)

DESIGN LW	N/A	EAGLE COPTERS MAINTENANCE LTD. CALGARY, ALBERTA, CANADA	
CHECKED EB	RELEASED MP	DRAWING NO. D212–725–2–G2	REV. C SHEET 24 OF 57
DATE 23–01–10		TITLE FIGURE 98–34S	SCALE NTS

Copyright 2034 by EAGLE COPTERS MAINTENANCE LTD

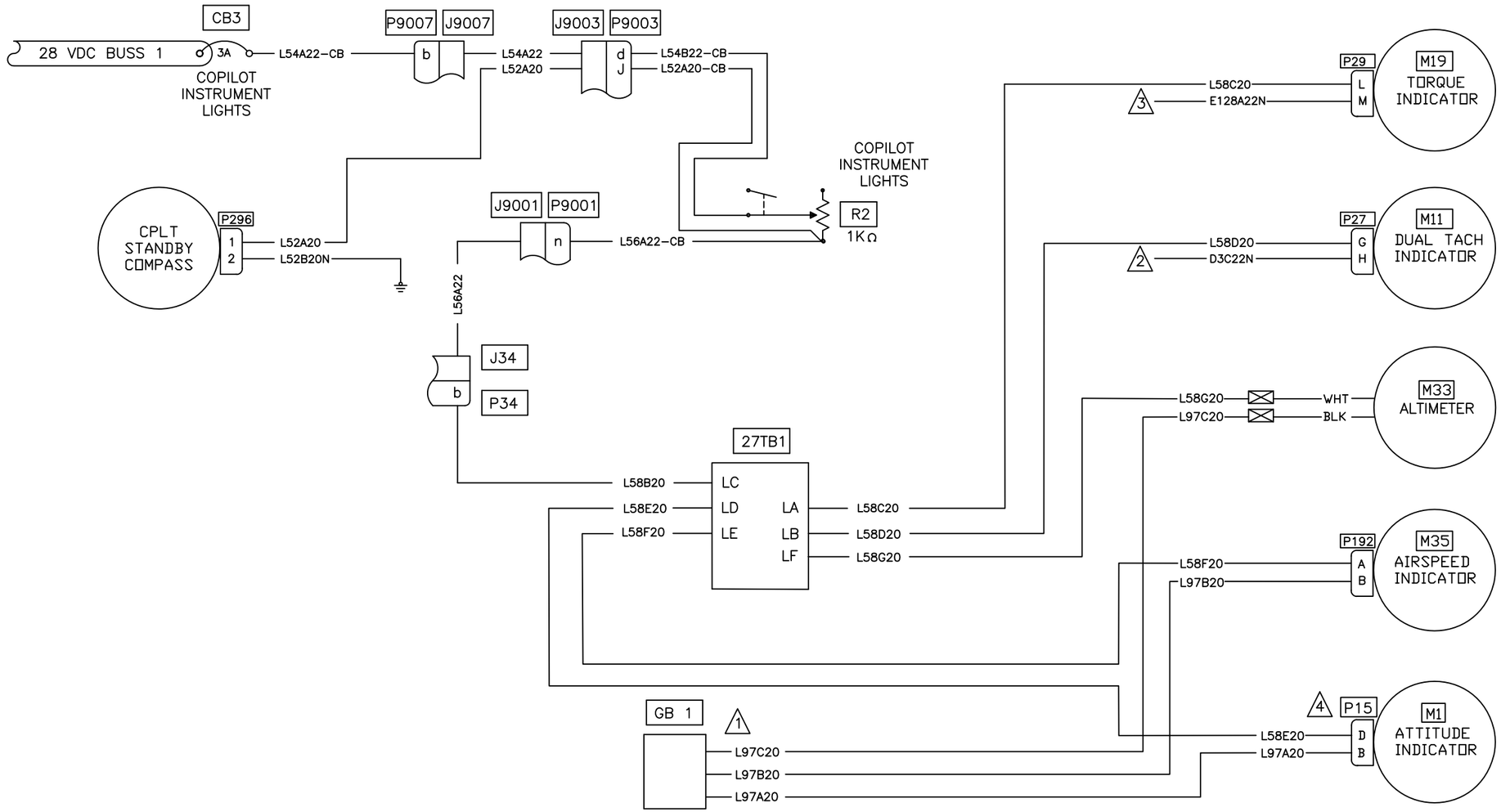

NOTES:

1. REFER TO COMPONENT REPLACEMENT
2. REFER TO DUAL TACHOMETER WIRING DIAGRAM 98–22S.
3. REFER TO TORQUE INDICATOR WIRING DIAGRAM 98–24S.
4. LIGHTING WIRING NOT REQUIRED IF ELECTRONIC ATTITUDE INDICATOR INSTALLED. CAP AND STOW IF PREVIOUSLY INSTALLED.

Figure 98–35S. COPILOT INSTRUMENT LIGHTS
(EFFECTIVE ON ALL S/N, EXCEPT 30687, 30817 & 30599)

DESIGN LW	N/A	EAGLE COPTERS MAINTENANCE LTD. CALGARY, ALBERTA, CANADA	
CHECKED EB	RELEASED MP	DRAWING NO. D212–725–2–G2	REV. C SHEET 25 OF 57
DATE 23–01–10		TITLE FIGURE 98–35S	SCALE NTS

Copyright 2023 by EAGLE COPTERS MAINTENANCE LTD

NOTES:

1. CAP & STOW L46E20 AT 27TB1 IF OVERLAY IS NOT USED
2. REFER TO FIGURE 98-23S FOR ADDITIONAL HOOKUPS TO THIS WIRE.

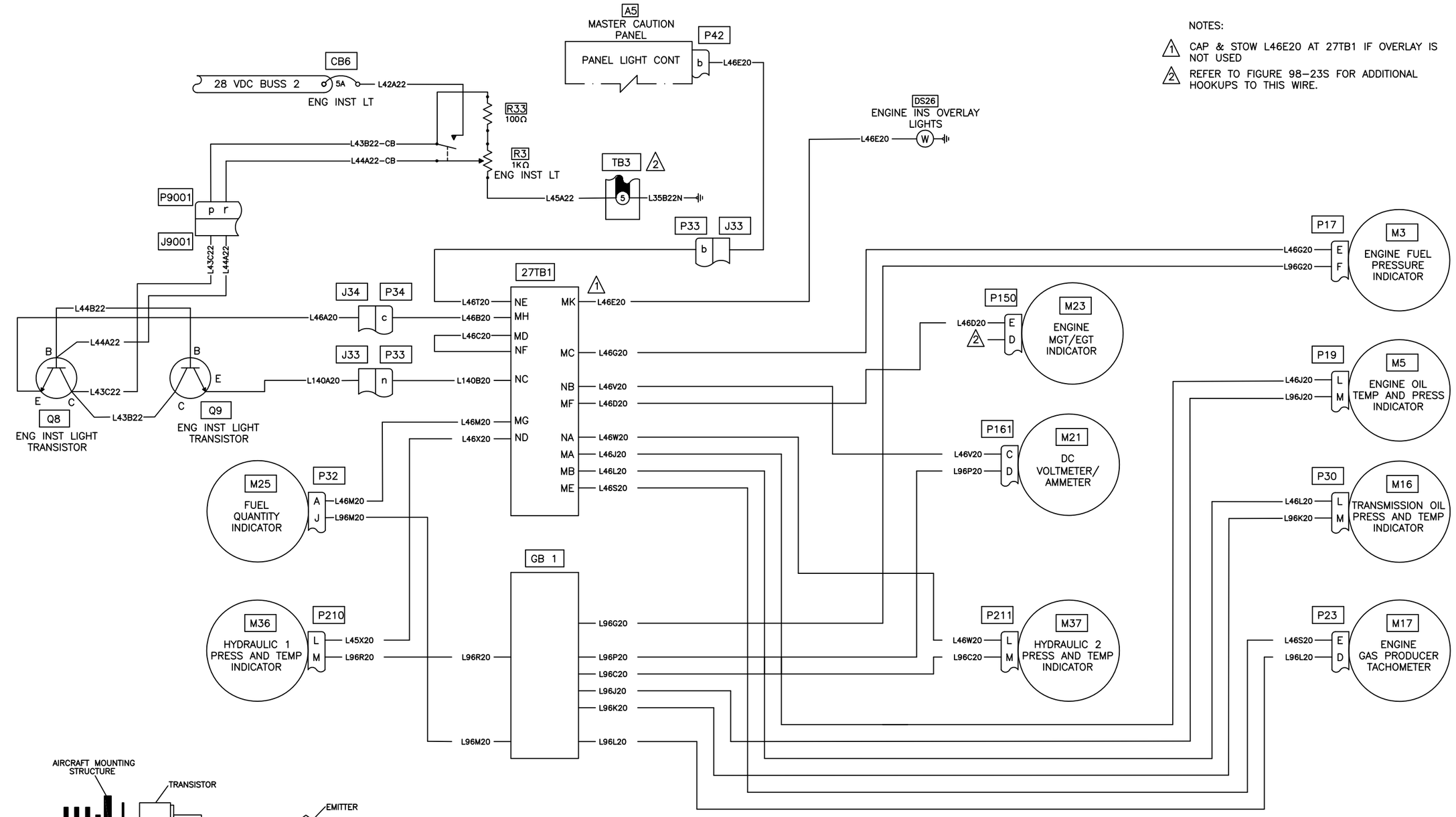

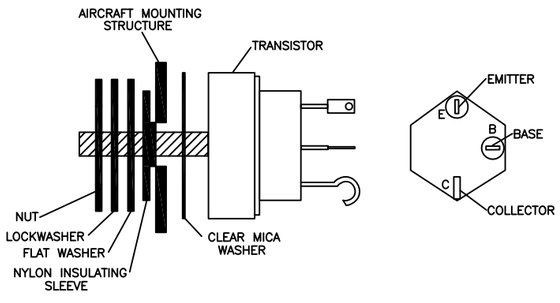

TRANSISTOR INSTALLATION STACK UP

Figure 98-36S. ENGINE INSTRUMENT LIGHTS
(EFFECTIVE ON ALL S/N, EXCEPT 30687, 30817 & 30599)

DESIGN LW	N/A	EAGLE COPTERS MAINTENANCE LTD. CALGARY, ALBERTA, CANADA	
CHECKED EB	RELEASED MP	DRAWING NO. D212-725-2-G2	REV. C SHEET 26 OF 57
DATE 23-01-10		TITLE FIGURE 98-36S	SCALE NTS

Copyright 2023 by EAGLE COPTERS MAINTENANCE LTD

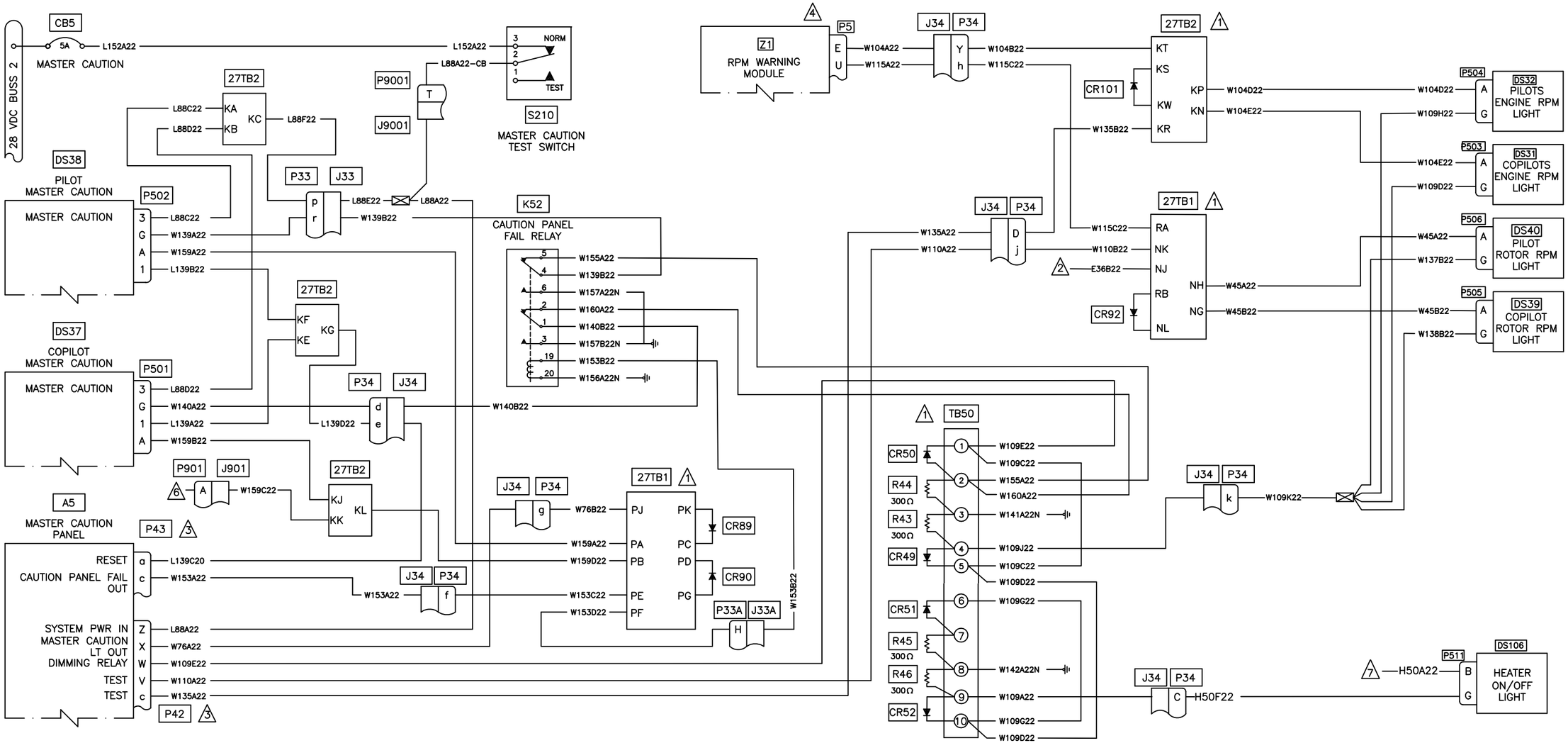

NOTES:

1. REFER TO COMPONENT REPLACEMENT
2. REFER TO HOURMETER
3. REFER TO MASTER CAUTION LIGHTS 98-38S, SHEET 5
4. REFER TO RPM LIMIT WARNING
5. REFER TO FLIGHT DATA RECORDER
6. REFER TO VERTICAL REFERENCE DOOR WIRING DIAGRAM IF DOOR INSTALLED
7. REFER TO HEATER SYSTEM DIAGRAM

Figure 98-37S. MASTER CAUTION AND RPM CAUTION LIGHTS
(EFFECTIVE ON ALL S/N, EXCEPT 30687, 30817 & 30599)

DESIGN LW	N/A	EAGLE COPTERS MAINTENANCE LTD. CALGARY, ALBERTA, CANADA	
CHECKED EB	RELEASED MP	DRAWING NO. D212-725-2-G2	REV. C
			SHEET 27 OF 57
DATE 23-01-10		TITLE FIGURE 98-37S	SCALE NTS

Copyright 2023 by EAGLE COPTERS MAINTENANCE LTD

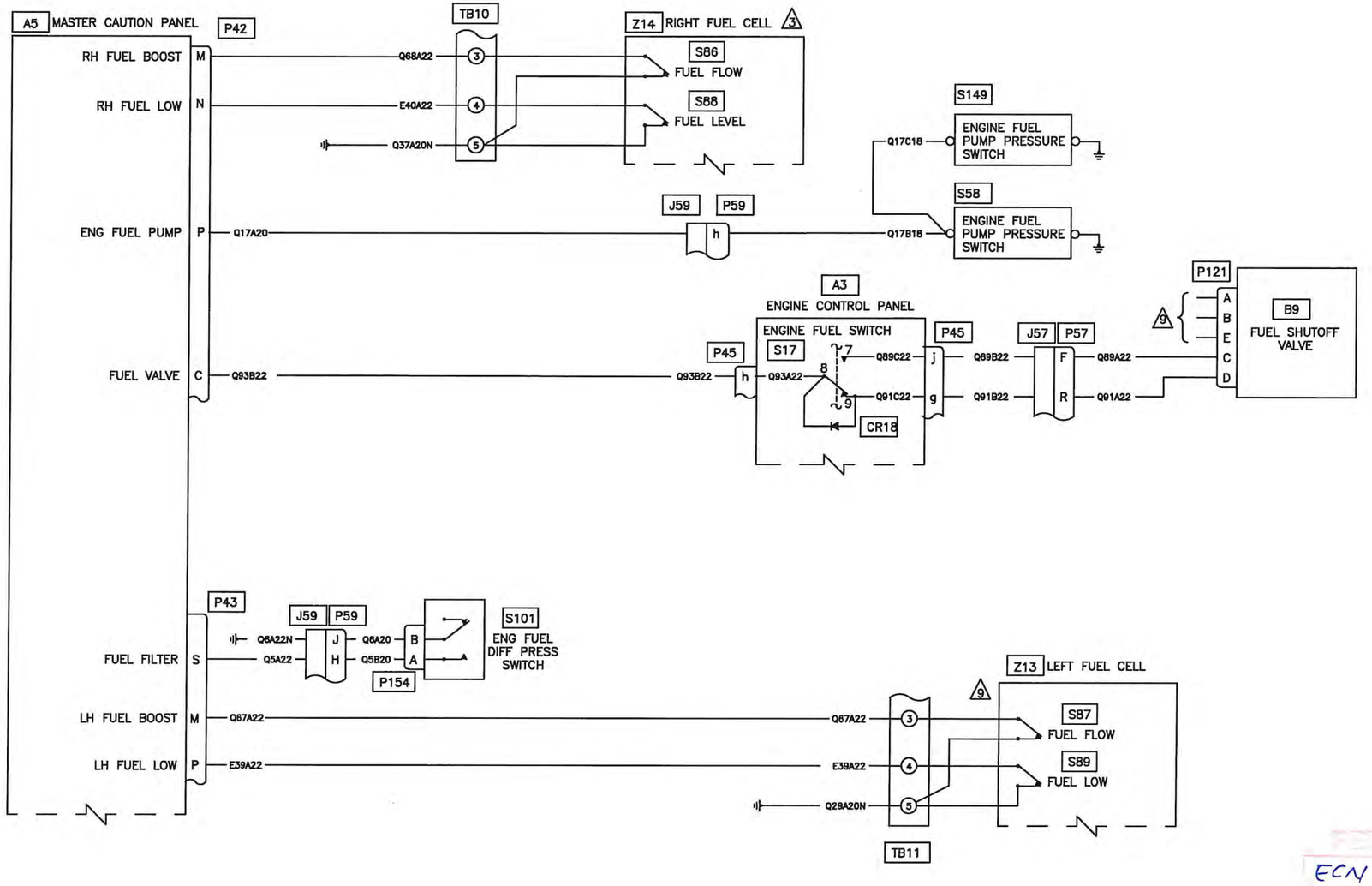

ECN 20-105
2020.04.20

Figure 98–38S. MASTER CAUTION LIGHTS (Sheet 1 of 5)
(EFFECTIVE ON ALL S/N, EXCEPT 30687, 30931, 30576, 30817 & 30599)

DESIGN	DRAWN BY	DART AEROSPACE LTD HAWKESBURY, ONTARIO, CANADA	
RD	RD		
CHECKED	APPROVED	DRAWING NO.	REV. B
RD	KB	D212-725-2-G2	SHEET 28 OF 57
DATE		TITLE	SCALE
10.08.10		FIGURE 98-38S SHEET 1 OF 5	NTS

Copyright 2008 by DART AEROSPACE LTD

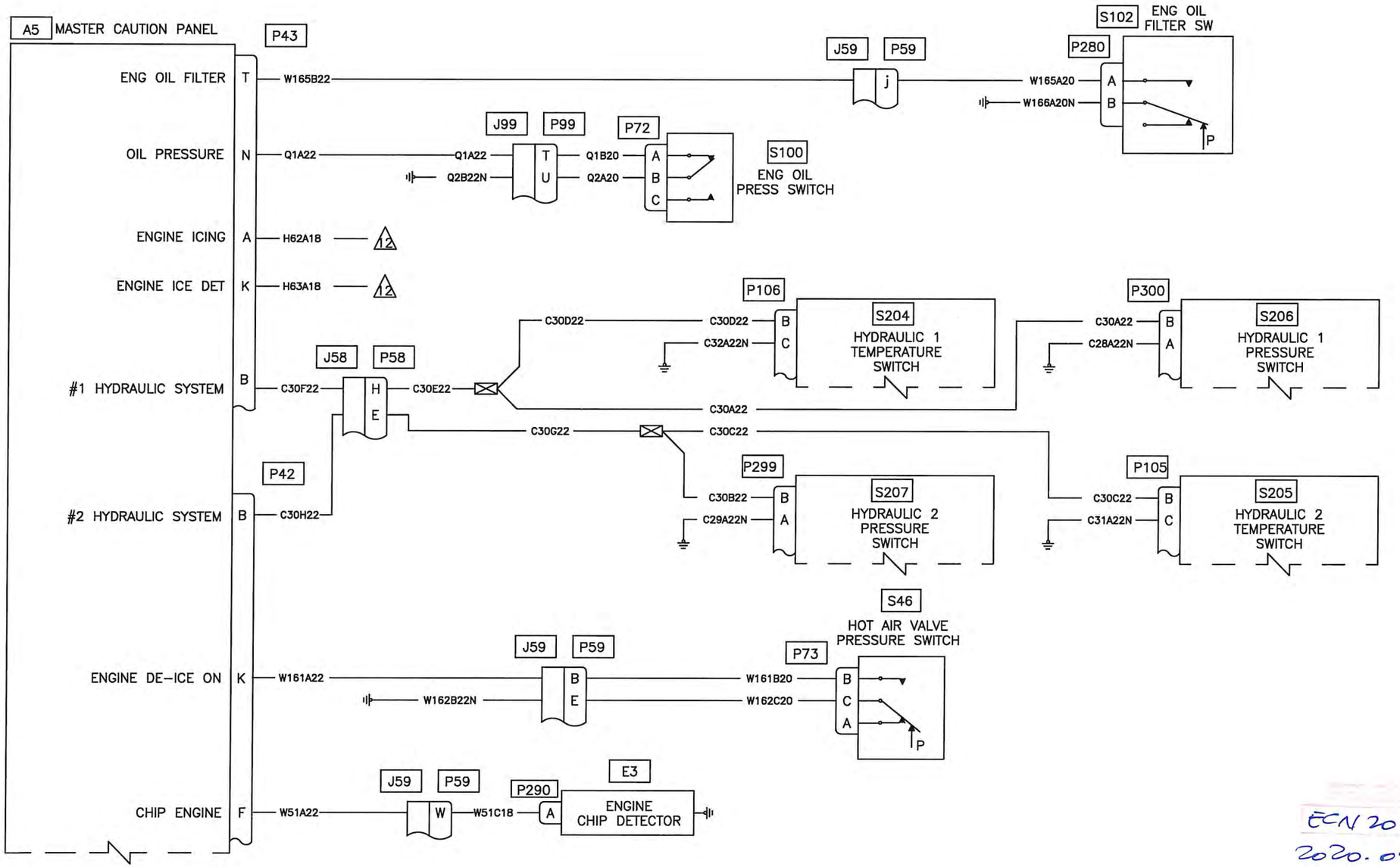

ECN 20-105
2020.04.20

Figure 98-38S. MASTER CAUTION LIGHTS (Sheet 2 of 5)
(EFFECTIVE ON ALL S/N, EXCEPT 30687, 30931, 30576, 30817 & 30599)

DESIGN	DRAWN BY	DART AEROSPACE LTD HAWKESBURY, ONTARIO, CANADA	
RD	RD		
CHECKED	APPROVED	DRAWING NO.	REV. A
RD	KB	D212-725-2-G2	SHEET 29 OF 57
DATE		TITLE	SCALE
08.11.24		FIGURE 98-38S SHEET 2 OF 5	NTS

Copyright 2008 by DART AEROSPACE LTD

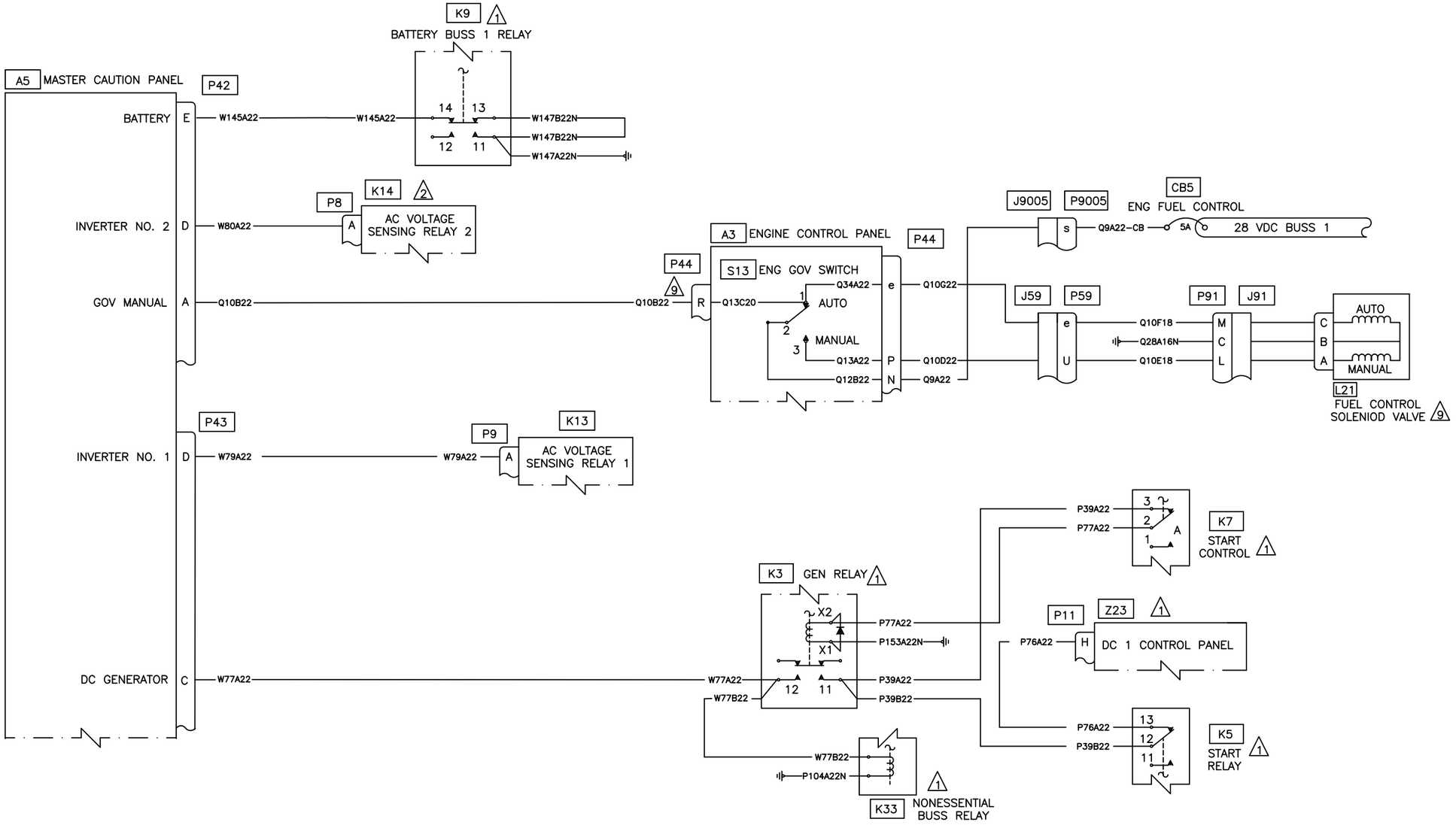

Figure 98–38S. MASTER CAUTION LIGHTS (Sheet 3 of 5)
(EFFECTIVE ON ALL S/N, EXCEPT 30687, 30817 & 30599)

DESIGN LW	N/A	EAGLE COPTERS MAINTENANCE LTD. CALGARY, ALBERTA, CANADA	
CHECKED EB	RELEASED MP	DRAWING NO. D212–725–2–G2	REV. B SHEET 30 OF 57
DATE 23–01–10		TITLE FIGURE 98–38S SHEET 3 OF 5	SCALE NTS

Copyright 2023 by EAGLE COPTERS MAINTENANCE LTD

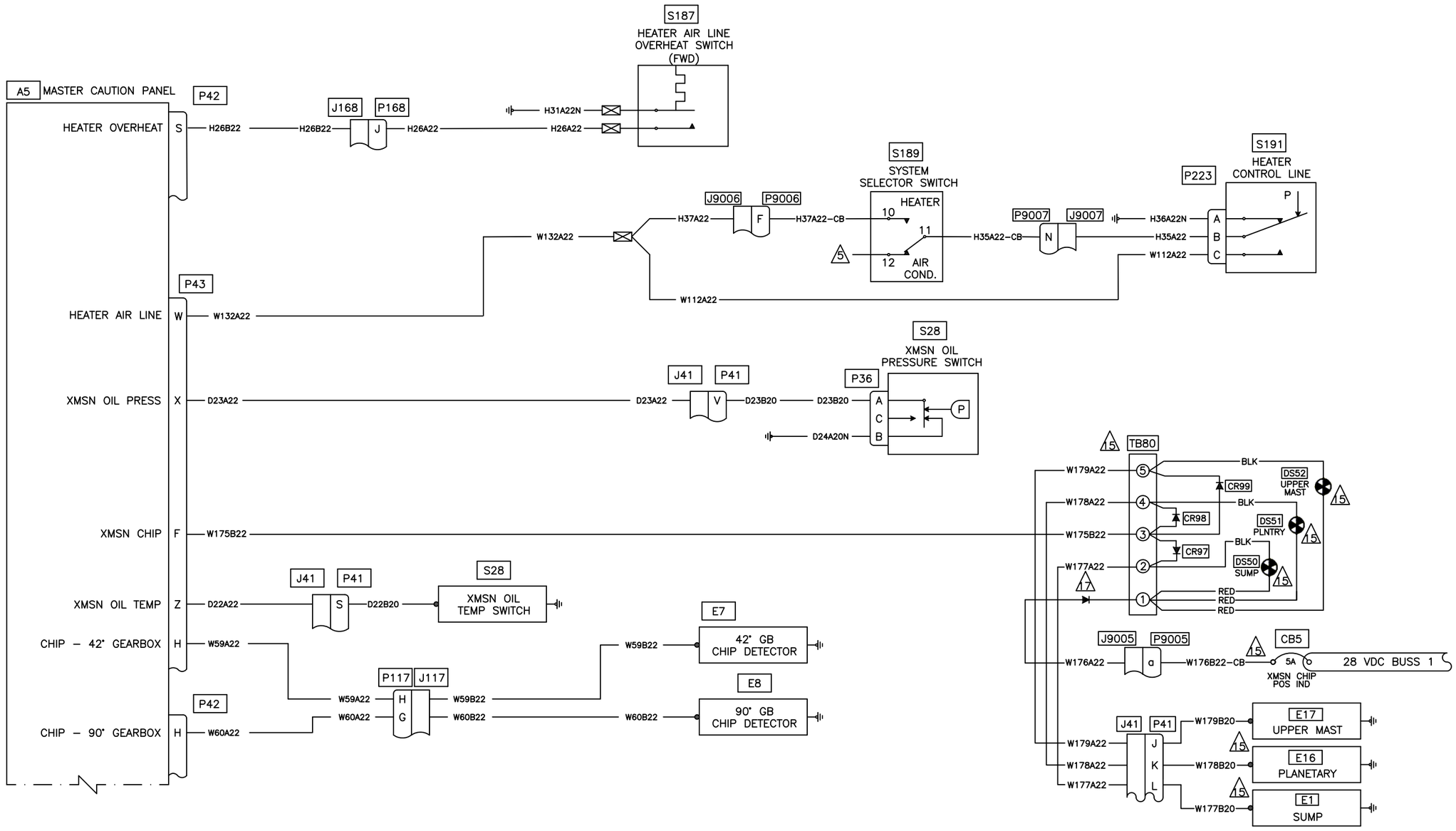

Figure 98–38S. MASTER CAUTION LIGHTS (Sheet 4 of 5)
(EFFECTIVE ON ALL S/N, EXCEPT 30687, 30817 & 30599)

DESIGN LW	N/A	EAGLE COPTERS MAINTENANCE LTD. CALGARY, ALBERTA, CANADA	
CHECKED EB	RELEASED MP	DRAWING NO. D212–725–2–G2	REV. D SHEET 31 OF 57
DATE 23–01–10		TITLE FIGURE 98–38S SHEET 4 OF 5	SCALE NTS

Copyright 2023 by EAGLE COPTERS MAINTENANCE LTD

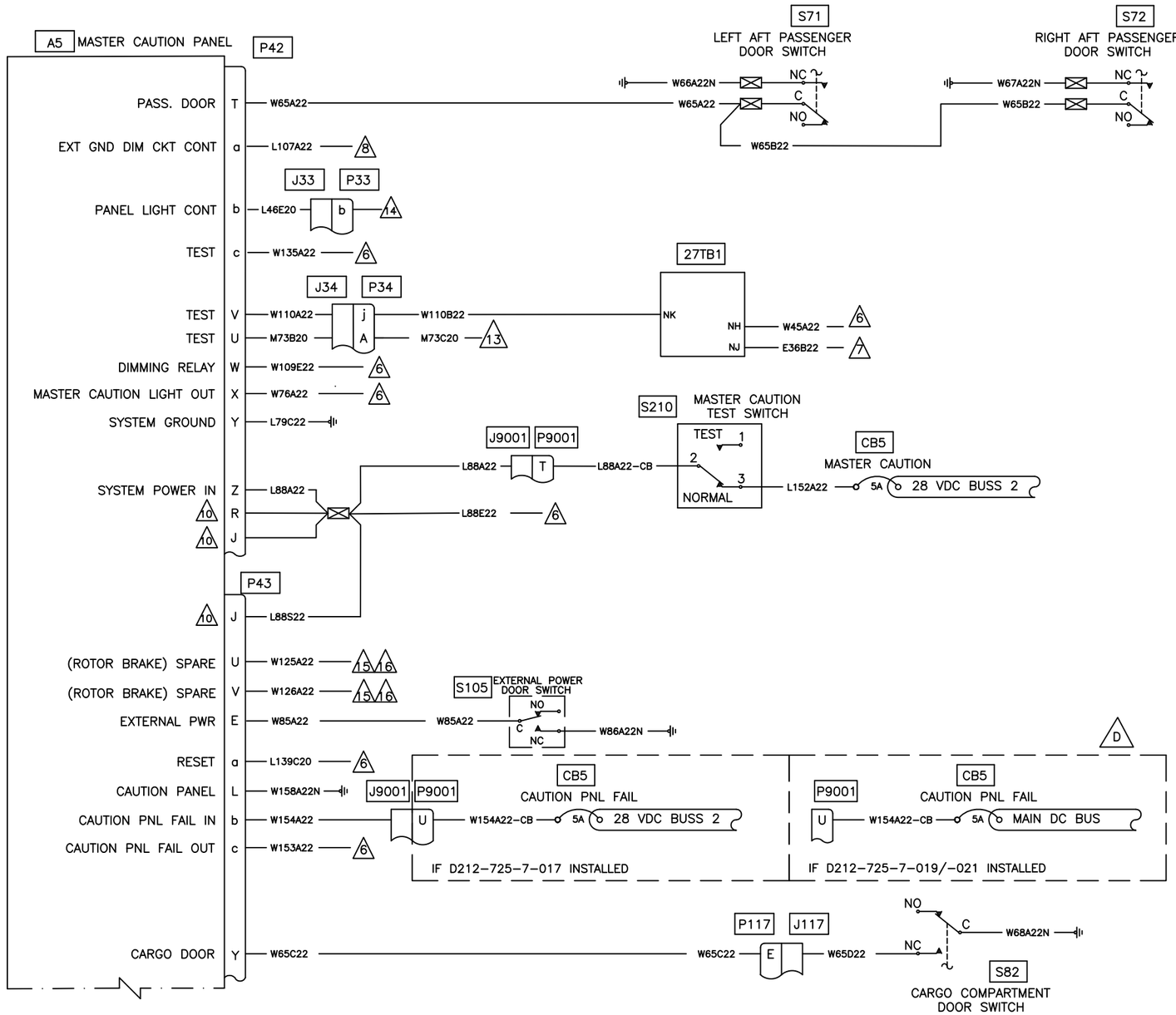

NOTES:

1. REFER TO GENERATOR 1
2. REFER TO AC POWER SYSTEM
3. REFER TO RH FUEL SYSTEM
4. REFER TO FUEL CROSSFEED
5. REFER TO HEATER/AIR CONDITIONING
6. REFER TO MASTER CAUTION AND RPM CAUTION LIGHTS
7. REFER TO HOURMETER
8. REFER TO PILOT INSTRUMENT LIGHTS
9. REFER TO LH FUEL SYSTEM
10. 28VDC INPUT REQUIRED TO TURN LIGHT OFF ON BLANK SEGMENT.
11. CAP AND STOW.
12. REFER TO ENGINE ANT-ICING
13. REFER TO CARGO RELEASE SYSTEM
14. REFER TO ENGINE INSTRUMENT LIGHTS
15. IF INSTALLED
16. REFER TO ROTOR BREAK FIGURE 1-7 IN BHT-212-SI-6
17. USE DIODE P/N: 10A02-T OR EQUIVALENT

Figure 98-38S. MASTER CAUTION LIGHTS (Sheet 5 of 5)
(EFFECTIVE ON ALL S/N, EXCEPT 30687, 30817 & 30599)

DESIGN LW	N/A	EAGLE COPTERS MAINTENANCE LTD. CALGARY, ALBERTA, CANADA	
CHECKED EB	RELEASED MP	DRAWING NO. D212-725-2-G2	REV. E SHEET 32 OF 57
DATE 23-01-10		TITLE FIGURE 98-38S SHEET 5 OF 5	SCALE NTS

Copyright 2023 by EAGLE COPTERS MAINTENANCE LTD

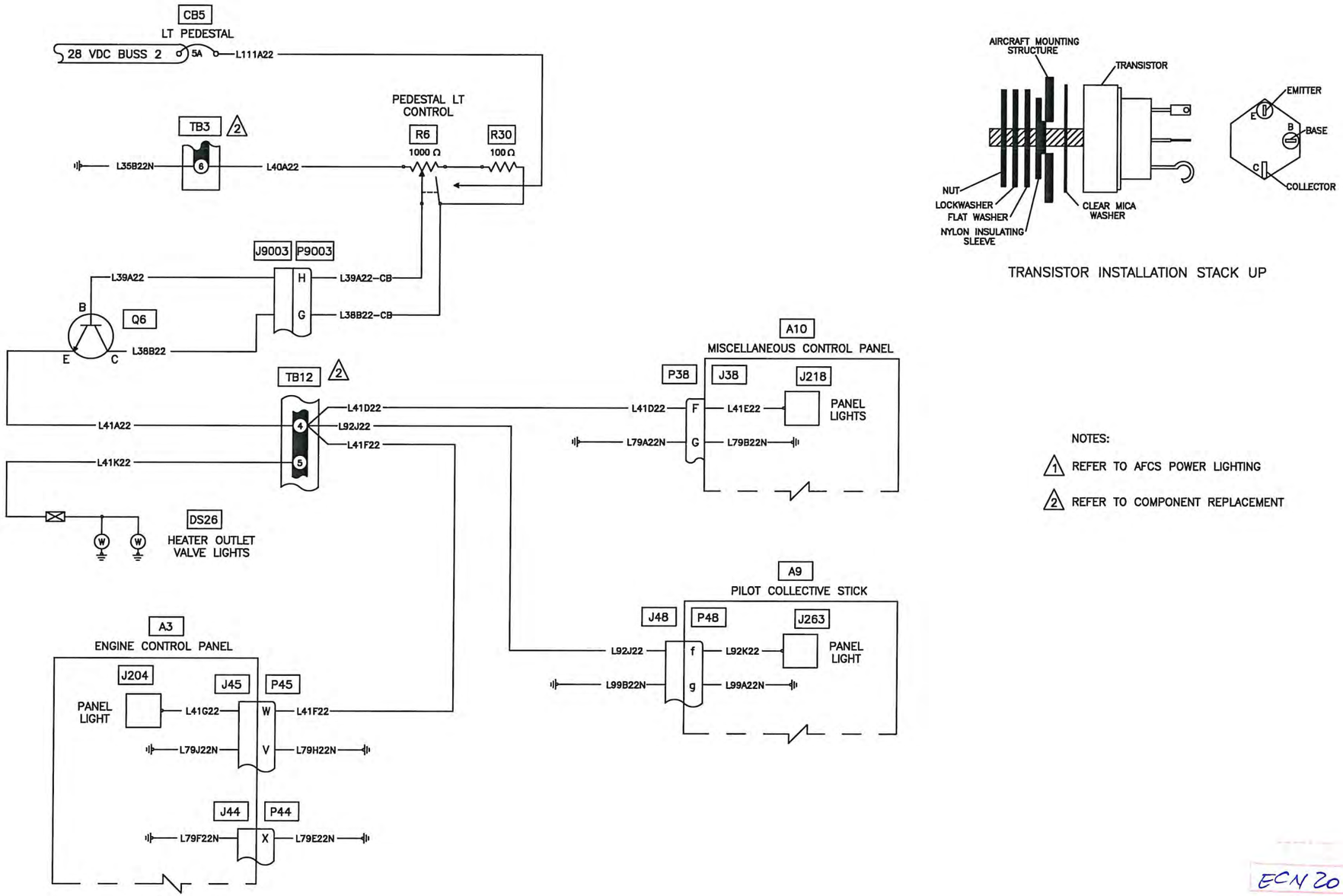

TRANSISTOR INSTALLATION STACK UP

NOTES:

1. REFER TO AFCS POWER LIGHTING
2. REFER TO COMPONENT REPLACEMENT

ECN 20-105
2020.04.20

Figure 98-39S. PEDESTAL LIGHTS
(EFFECTIVE ON ALL S/N, EXCEPT 30687, 30931, 30576, 30817 & 30599)

DESIGN RD	DRAWN BY RD	DART AEROSPACE LTD HAWKESBURY, ONTARIO, CANADA	
CHECKED RD	APPROVED KP	DRAWING NO. D212-725-2-G2	REV. A SHEET 33 OF 57
DATE 08.11.24		TITLE FIGURE 98-39S	SCALE NTS

Copyright 2008 by DART AEROSPACE LTD

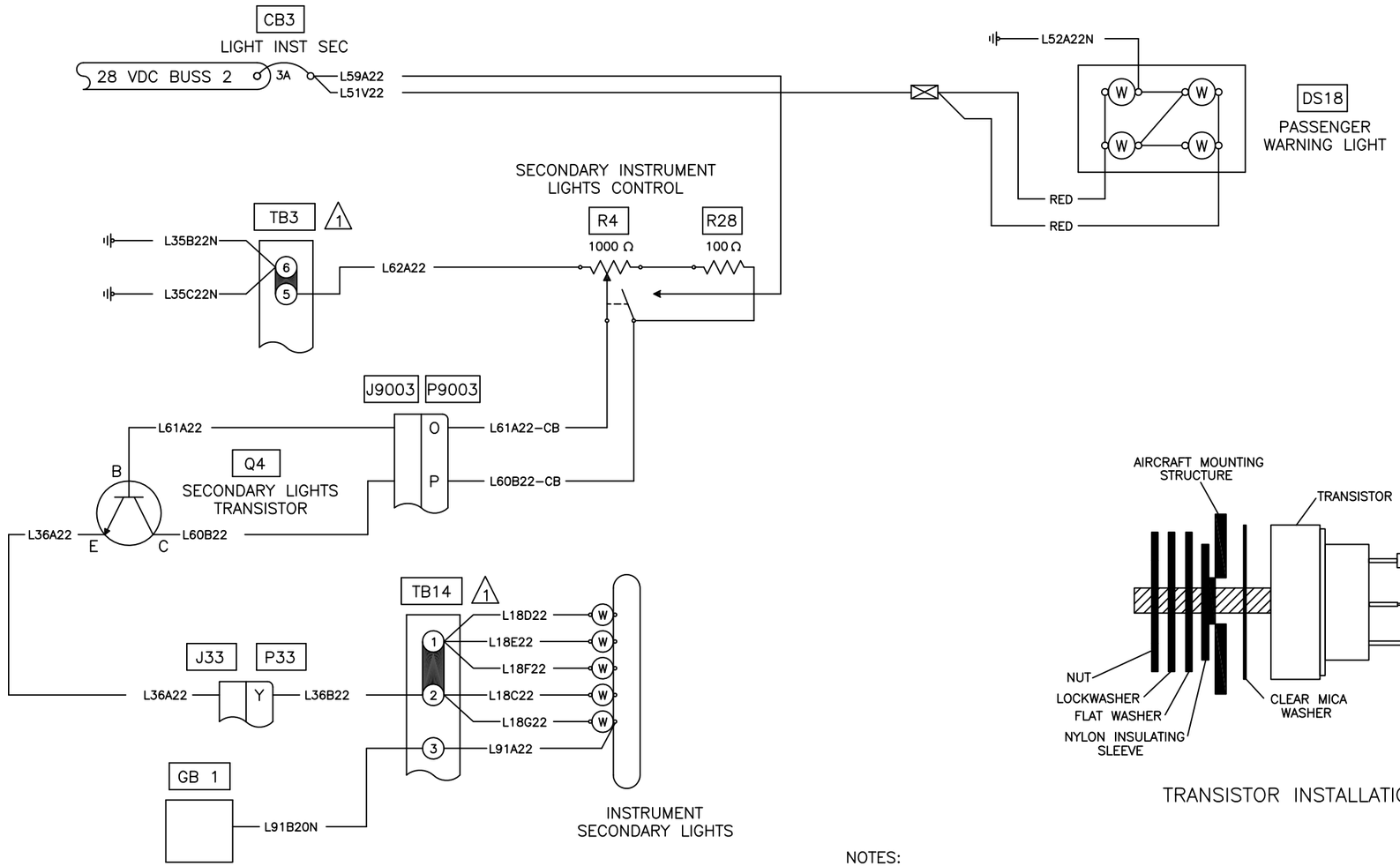

TRANSISTOR INSTALLATION STACK UP

NOTES:

1. REFER TO COMPONENT REPLACEMENT

Figure 98–40S. SECONDARY LIGHTS
(EFFECTIVE ON ALL S/N, EXCEPT 30687, 30817 & 30599)

DESIGN LW	N/A	EAGLE COPTERS MAINTENANCE LTD. CALGARY, ALBERTA, CANADA	
CHECKED EB	RELEASED MP	DRAWING NO. D212–725–2–G2	REV. B SHEET 34 OF 57
DATE 23–01–10		TITLE FIGURE 98–40S	SCALE NTS

Copyright 2023 by EAGLE COPTERS MAINTENANCE LTD

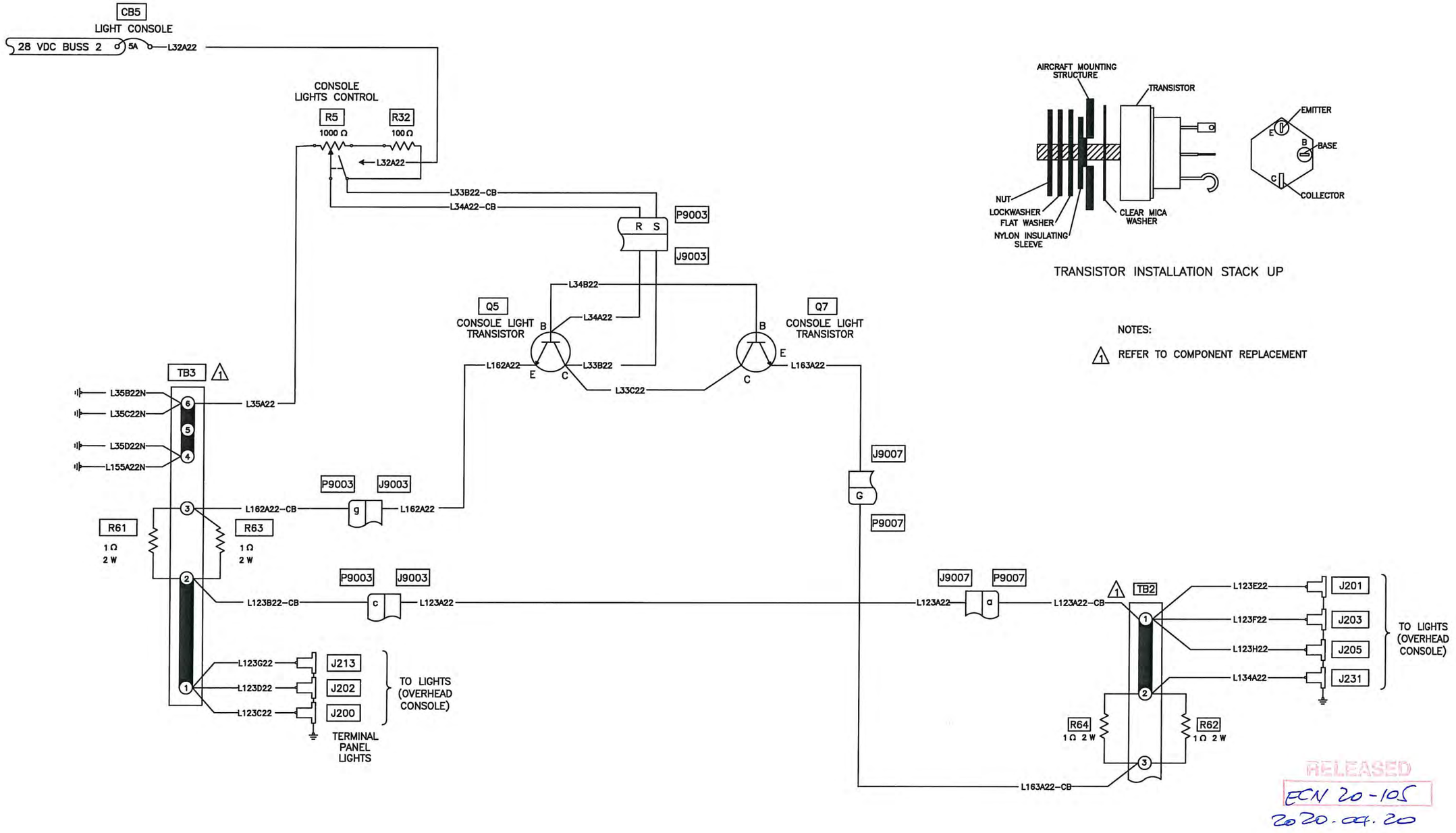

TRANSISTOR INSTALLATION STACK UP

NOTES:

1. REFER TO COMPONENT REPLACEMENT

RELEASED
ECN 20-105
2020.04.20

Figure 98–41S. OVERHEAD LIGHTS
(EFFECTIVE ON ALL S/N, EXCEPT 30687, 30931, 30576, 30817 & 30599)

DESIGN	DRAWN BY	DART AEROSPACE LTD HAWKESBURY, ONTARIO, CANADA	
RD	RD		
CHECKED	APPROVED	DRAWING NO.	REV. A
RD	KB	D212-725-2-G2	SHEET 35 OF 57
DATE		TITLE	SCALE
08.11.24		FIGURE 98-41S	NTS

Copyright 2008 by DART AEROSPACE LTD

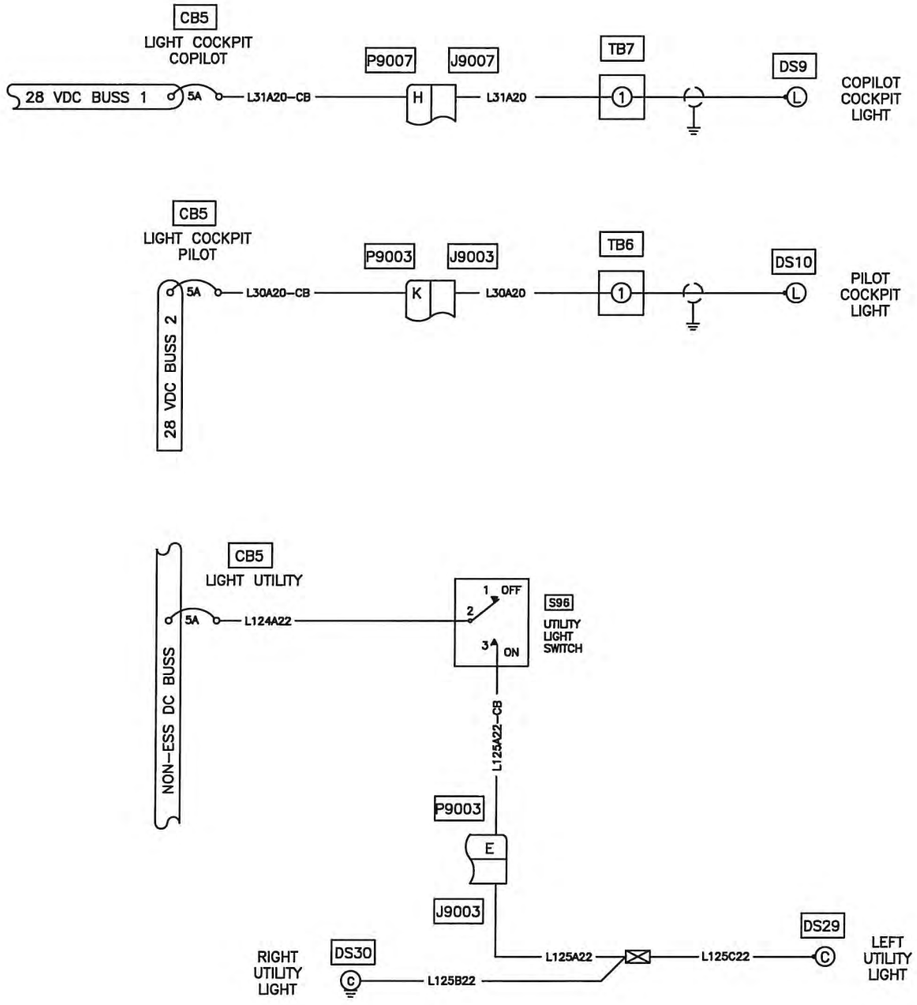

Figure 98–42S. COCKPIT AND UTILITY LIGHTS
(EFFECTIVE ON ALL S/N, EXCEPT 30687, 30931, 30576, 30817 & 30599)

RELEASED
ECN 20-105
2020.09.20

DESIGN: RD	DRAWN BY: RD	DART AEROSPACE LTD, HAWKESBURY, ONTARIO, CANADA	
CHECKED: RD	APPROVED: KH	DRAWING NO.: D212-725-2-G2	REV. A
DATE: 08.11.24		TITLE: FIGURE 98-42S	SHEET 36 OF 57
			SCALE: NTS

Copyright 2008 by DART AEROSPACE LTD

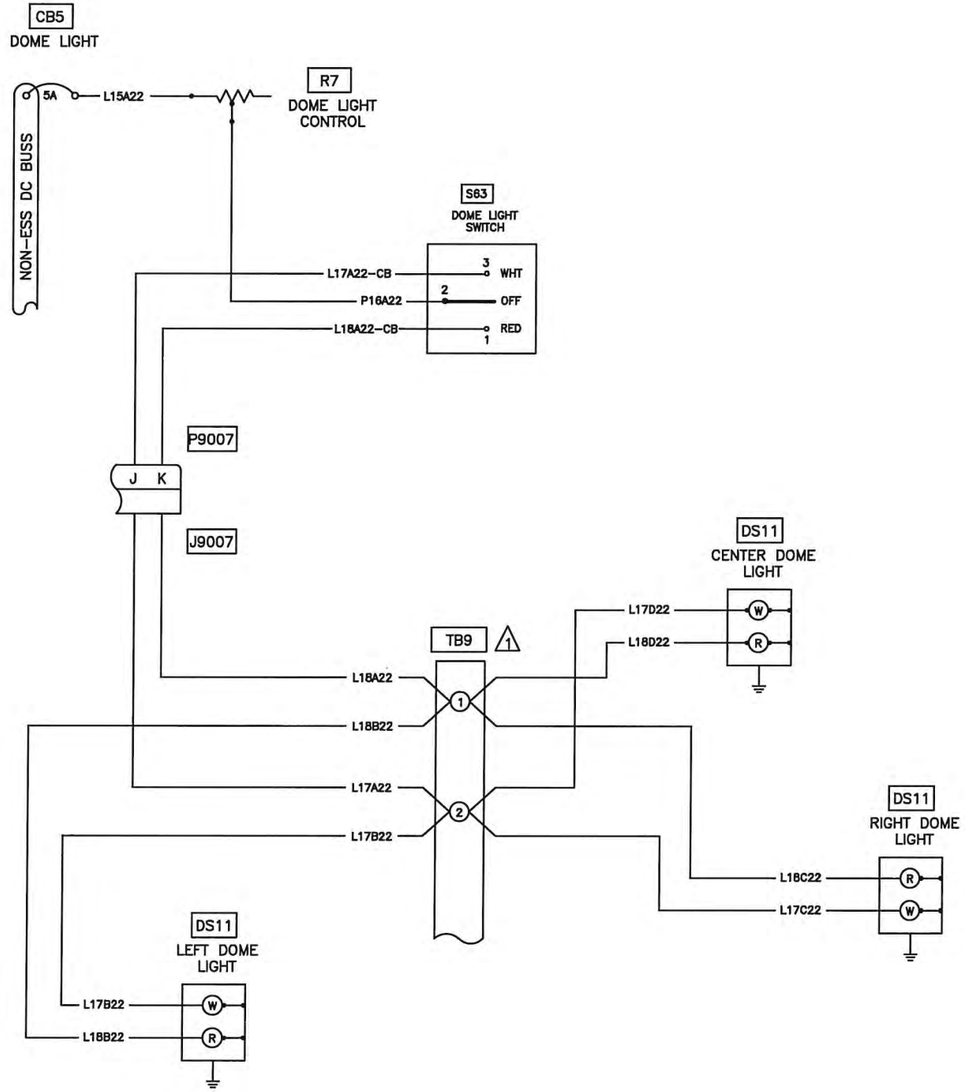

NOTES:

1. REFER TO COMPONENT REPLACEMENT

RELEASED
ECN 20-105
2020.04.20

Figure 98–43S. DOME LIGHTS
(EFFECTIVE ON ALL S/N, EXCEPT 30687, 30931, 30576, 30817 & 30599)

DESIGN: RD	DRAWN BY: RD	DART AEROSPACE LTD, HAWKESBURY, ONTARIO, CANADA	
CHECKED: RD	APPROVED: KD	DRAWING NO.: D212-725-2-G2	REV. A
DATE: 08.11.24		TITLE: FIGURE 98-43S	SHEET 37 OF 57
			SCALE: NTS

Copyright 2008 by DART AEROSPACE LTD

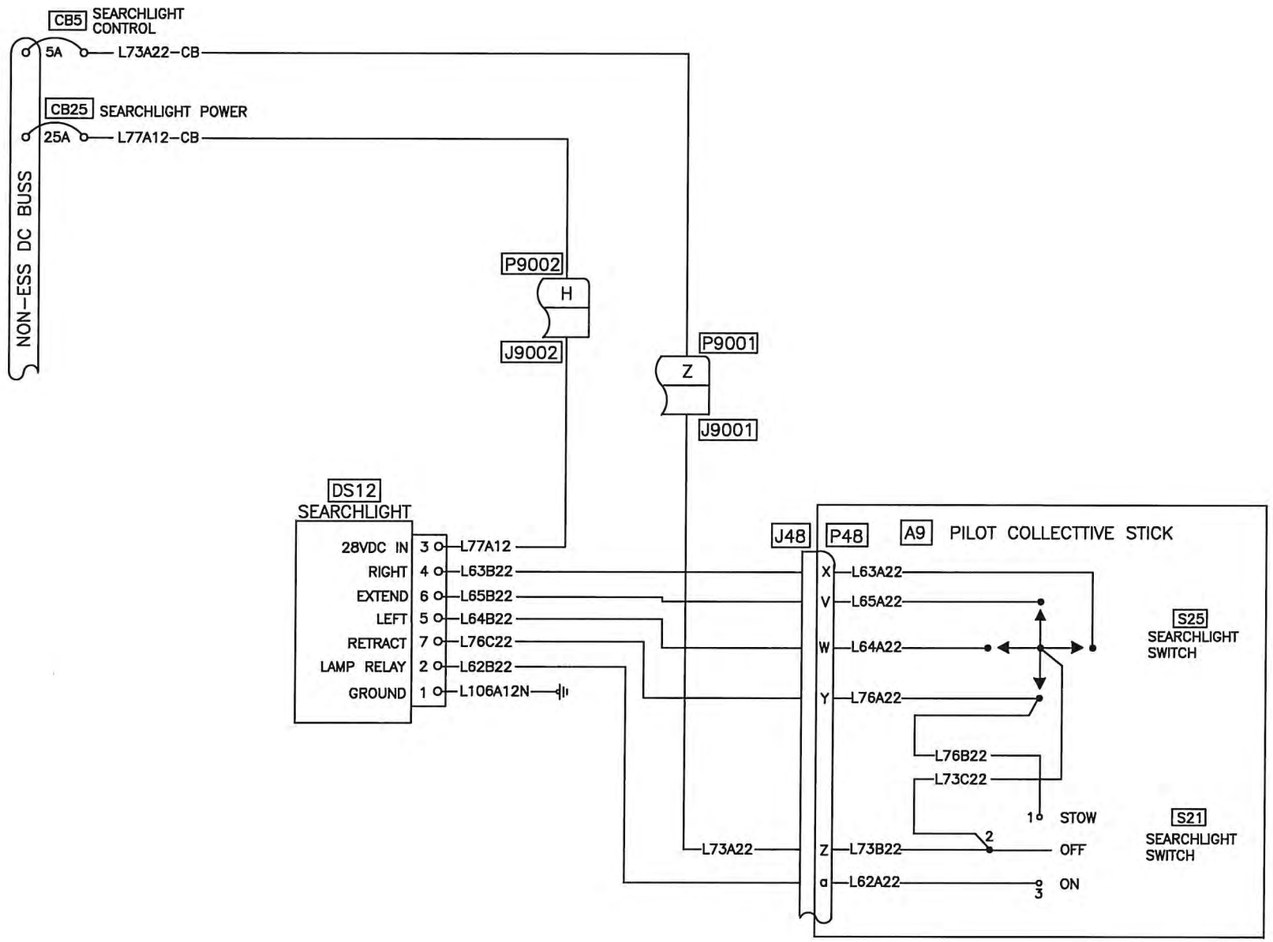

RELEASED
ECN 20-105
2020.04.20

Figure 98–44S. SEARCHLIGHT
(EFFECTIVE ON ALL S/N, EXCEPT 30687, 30931, 30576, 30817 & 30599)

DESIGN	DRAWN BY	DART AEROSPACE LTD HAWKESBURY, ONTARIO, CANADA	
RD	RD		
CHECKED	APPROVED	DRAWING NO.	REV. A
RD	KD	D212–725–2–G2	SHEET 38 OF 57
DATE		TITLE	SCALE
08.11.24		FIGURE 98–44S	NTS

Copyright 2008 by DART AEROSPACE LTD

NOTES:

1. LOCATED UNDER CABIN FOR NORMAL INSTALLATION
2. STOWED EXCEPT WHEN FLOATS ARE INSTALLED. LIGHT IS RELOCATED TO TAIL BOOM USING REVISED WIRING SHOWN.

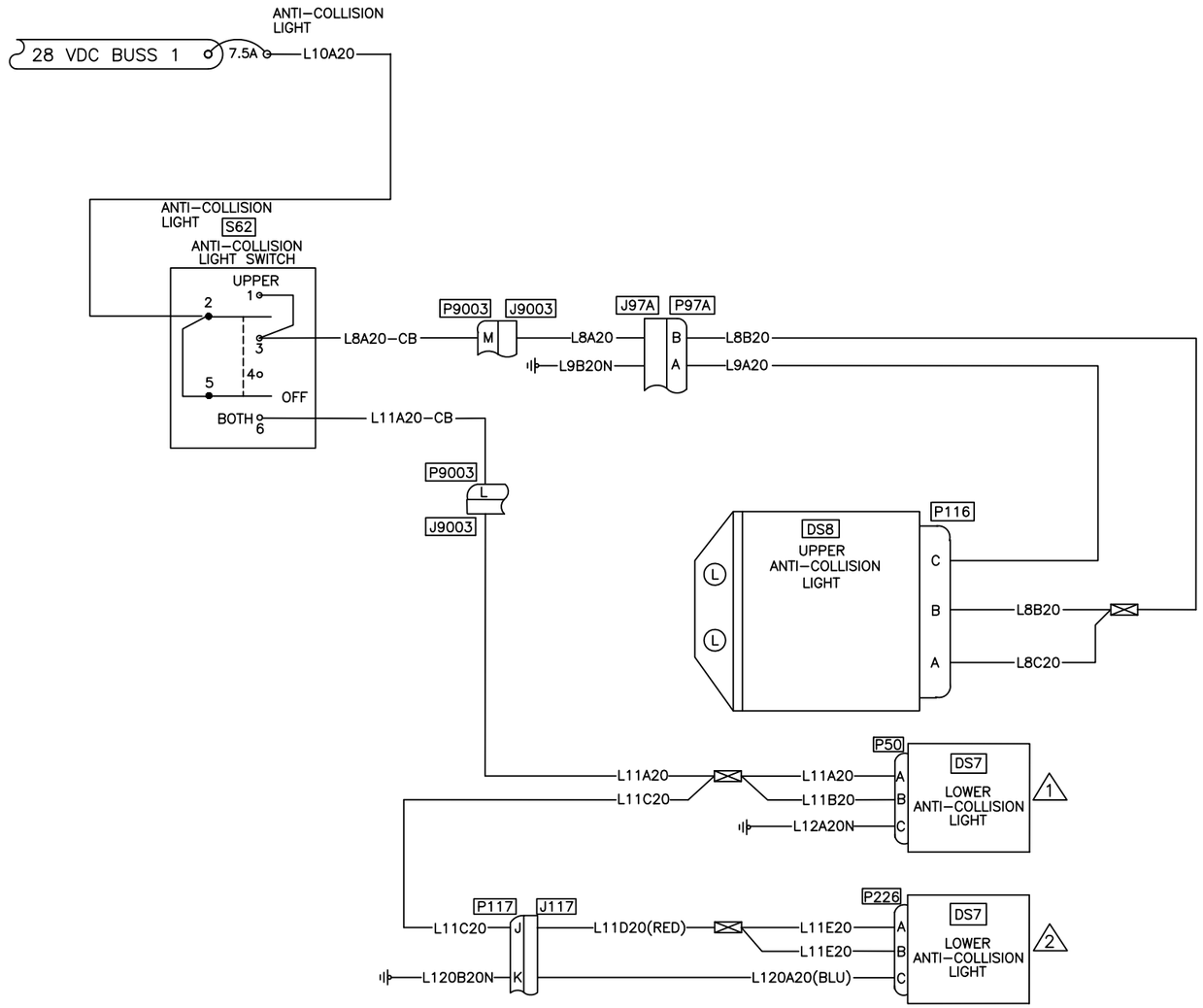

Figure 98-45S. ANTI-COLLISION LIGHTS
(EFFECTIVE ON ALL S/N, EXCEPT 30687, 30817 & 30599)

DESIGN LW	N/A	EAGLE COPTERS MAINTENANCE LTD. CALGARY, ALBERTA, CANADA	
CHECKED EB	RELEASED MP	DRAWING NO. D212-725-2-G2	REV. B SHEET 39 OF 57
DATE 23-01-10		TITLE FIGURE 98-45S	SCALE NTS

Copyright 2023 by EAGLE COPTERS MAINTENANCE LTD

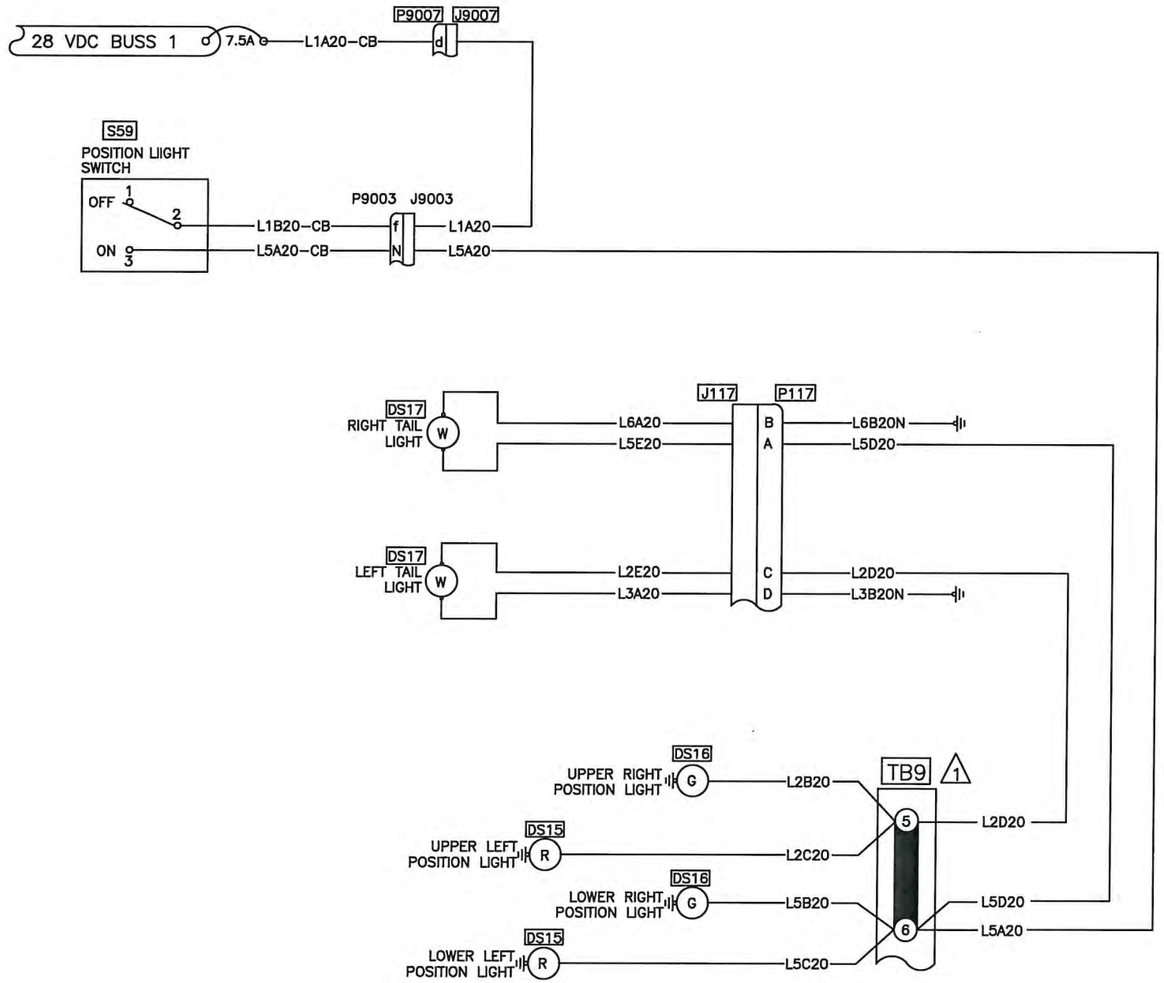

NOTES:

1. REFER TO COMPONENT REPLACEMENT

RELEASED
ECN 20-105
2020.04.20

Figure 98-46S. POSITION LIGHTS
(EFFECTIVE ON ALL S/N, EXCEPT 30687, 30931, 30576, 30817 & 30599)

DESIGN: RD	DRAWN BY: RD	DART AEROSPACE LTD, HAWKESBURY, ONTARIO, CANADA	
CHECKED: RD	APPROVED: KD	DRAWING NO.: D212-725-2-G2	REV. A
DATE: 08.11.24		TITLE: FIGURE 98-46S	SHEET 40 OF 57
			SCALE: NTS

Copyright 2008 by DART AEROSPACE LTD

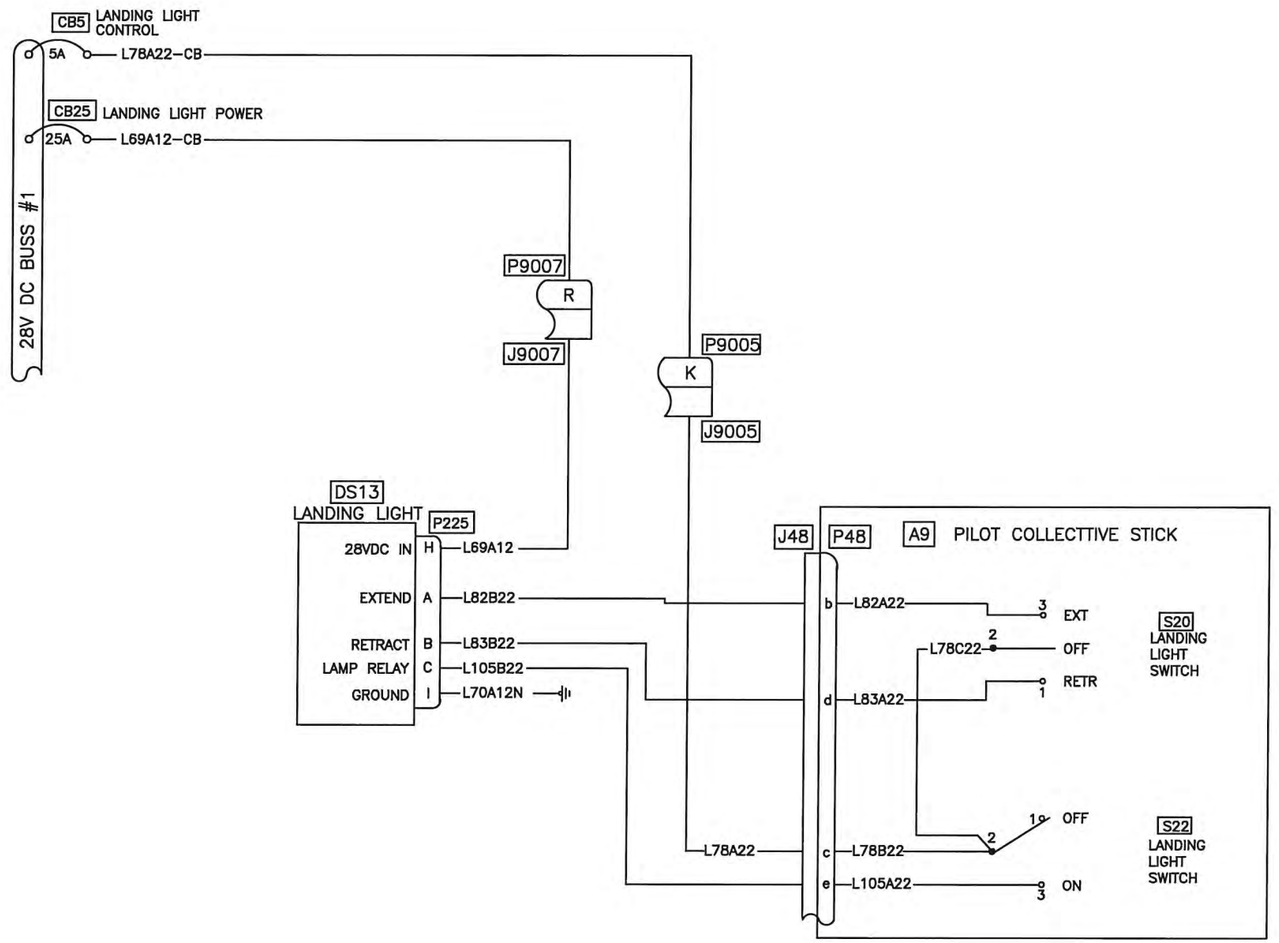

RELEASED
ECN 20-105
2020.04.20

Figure 98–47S. LANDING LIGHTS
(EFFECTIVE ON ALL S/N, EXCEPT 30687, 30931, 30576, 30817 & 30599)

DESIGN RD	DRAWN BY RD	DART AEROSPACE LTD HAWKESBURY, ONTARIO, CANADA	
CHECKED RD	APPROVED KPS	DRAWING NO. D212–725–2–G2	REV. A SHEET 41 OF 57
DATE 08.11.24		TITLE FIGURE 98–47S	SCALE NTS

Copyright 2008 by DART AEROSPACE LTD

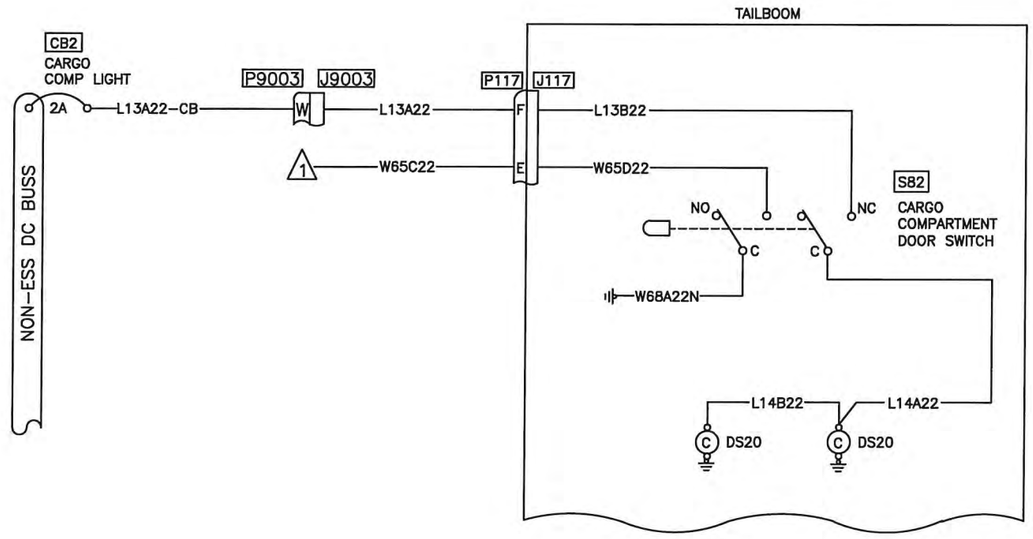

NOTES:

1. REFER TO MASTER CAUTION LIGHTS

Figure 98-48S. CARGO COMPARTMENT LIGHTS
(EFFECTIVE ON ALL S/N, EXCEPT 30687, 30931, 30576, 30817 & 30599)

RELEASED
ECN 20-105
2020.04.20

DESIGN: RD	DRAWN BY: RD	DART AEROSPACE LTD, HAWKESBURY, ONTARIO, CANADA	
CHECKED: RD	APPROVED: KB	DRAWING NO.: D212-725-2-G2	REV. A
DATE: 08.11.24		TITLE: FIGURE 98-48S	SHEET 42 OF 57
			SCALE: NTS

Copyright 2008 by DART AEROSPACE LTD

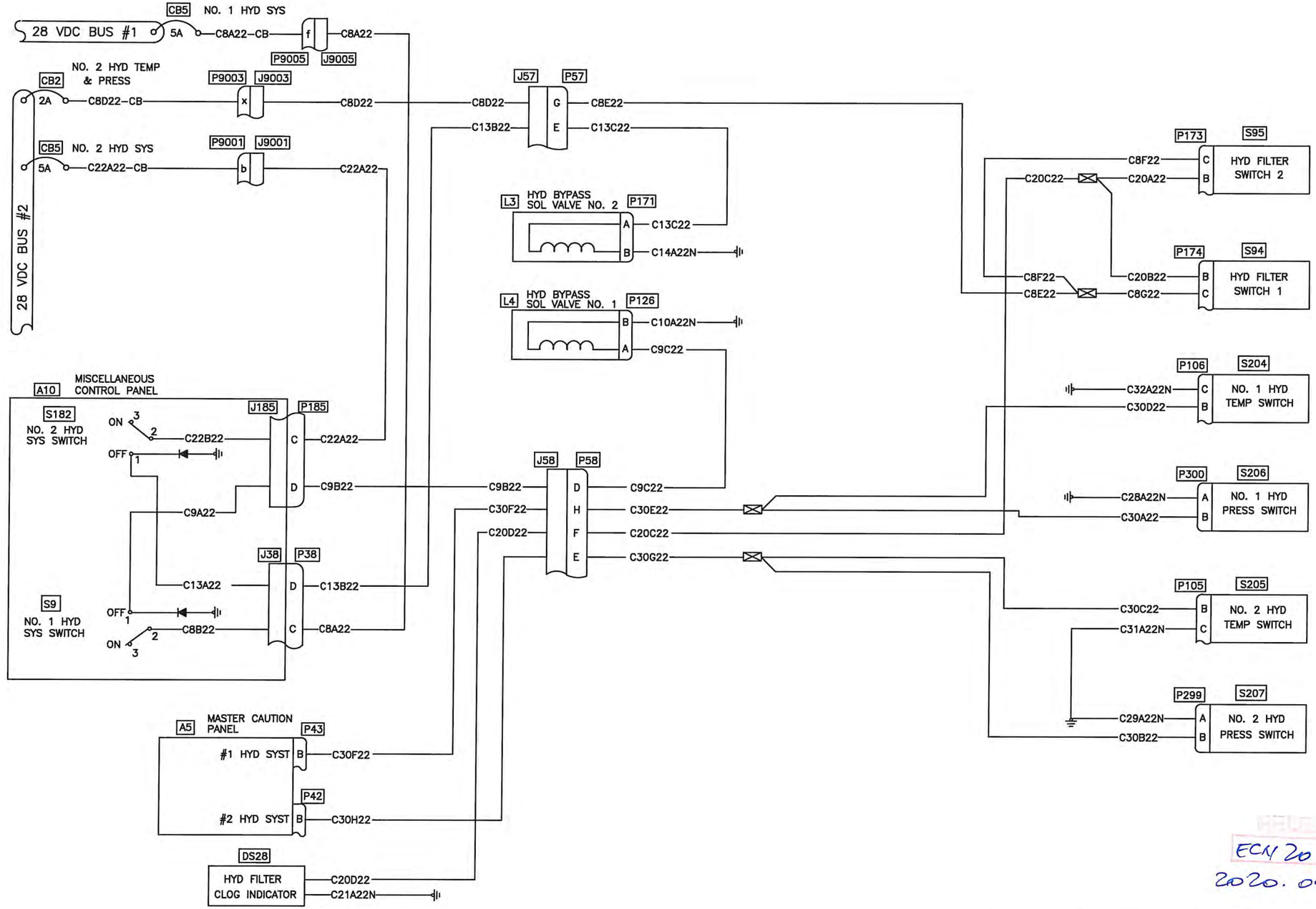

Figure 98-49S. HYDRAULIC SYSTEM

(EFFECTIVE ON ALL S/N, EXCEPT 30687, 30931, 30576, 30817 & 30599)

ECN 20-105
2020.04.20

DESIGN: RD	DRAWN BY: RD	DART AEROSPACE LTD, HAWKESBURY, ONTARIO, CANADA	
CHECKED: RD	APPROVED: KAB	DRAWING NO.: D212-725-2-G2	REV. A
DATE: 08.11.24		TITLE: FIGURE 98-49S	SHEET 43 OF 57, SCALE: NTS

Copyright 2008 by DART AEROSPACE LTD

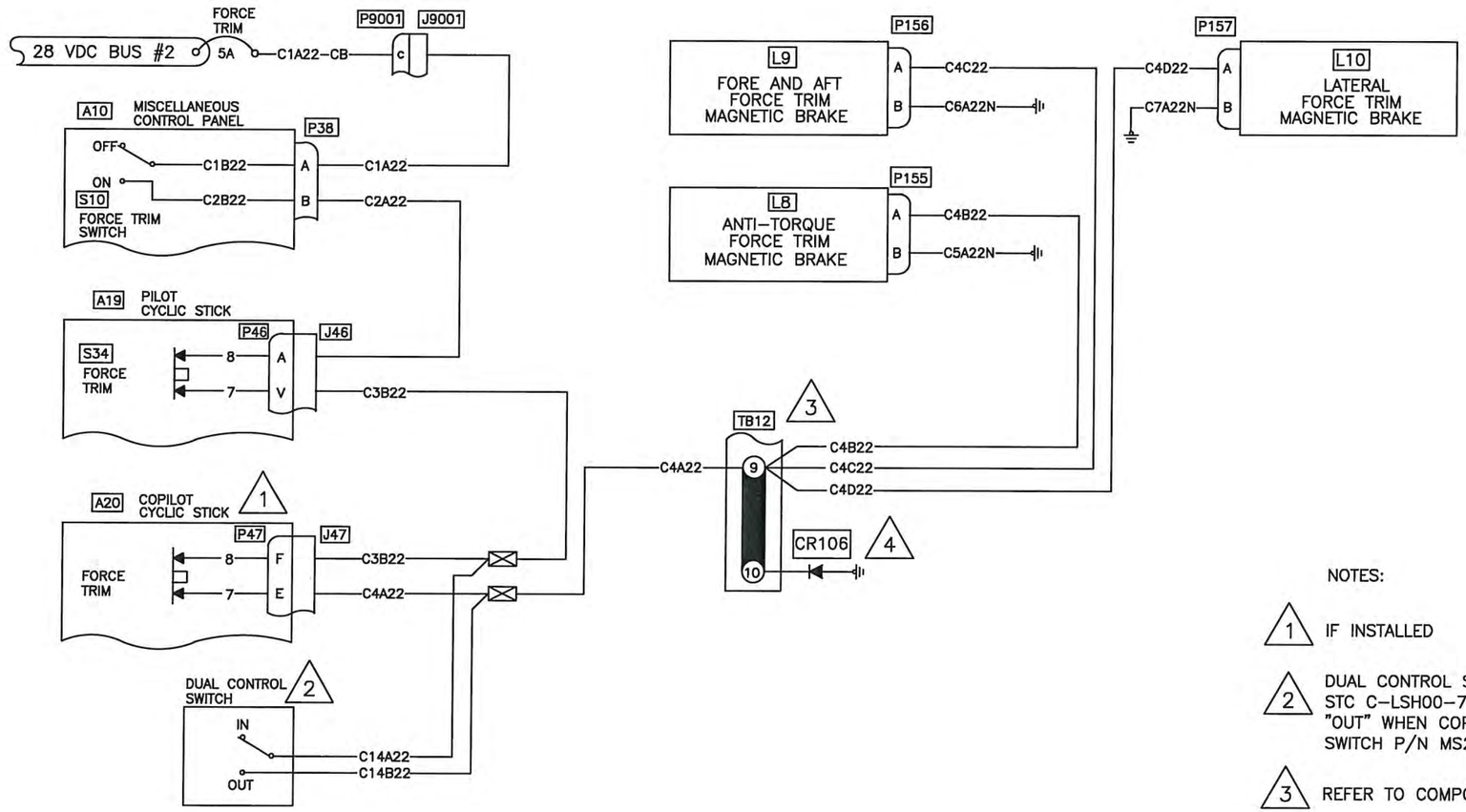

NOTES:

1. IF INSTALLED
2. DUAL CONTROL SWITCH INSTALLED PER STC C–LSH00–716/D. SELECT SWITCH TO "OUT" WHEN COPILOTS CYCLIC REMOVED. SWITCH P/N MS24523–22.
3. REFER TO COMPONENT REPLACEMENT
4. USED FOR TRANSIENT SUPPRESSION

RELEASED
ECN 20-105
2020.04.20

Figure 98–54S. FORCE TRIM
(EFFECTIVE ON ALL S/N, EXCEPT 30687, 30931, 30576, 30817 & 30599)

DESIGN	DRAWN BY	DART AEROSPACE LTD HAWKESBURY, ONTARIO, CANADA	
RD	RD		
CHECKED	APPROVED	DRAWING NO.	REV. A
RD	KB	D212–725–2–G2	SHEET 44 OF 57
DATE		TITLE	SCALE
08.11.24		FIGURE 98–54S	NTS

Copyright 2008 by DART AEROSPACE LTD

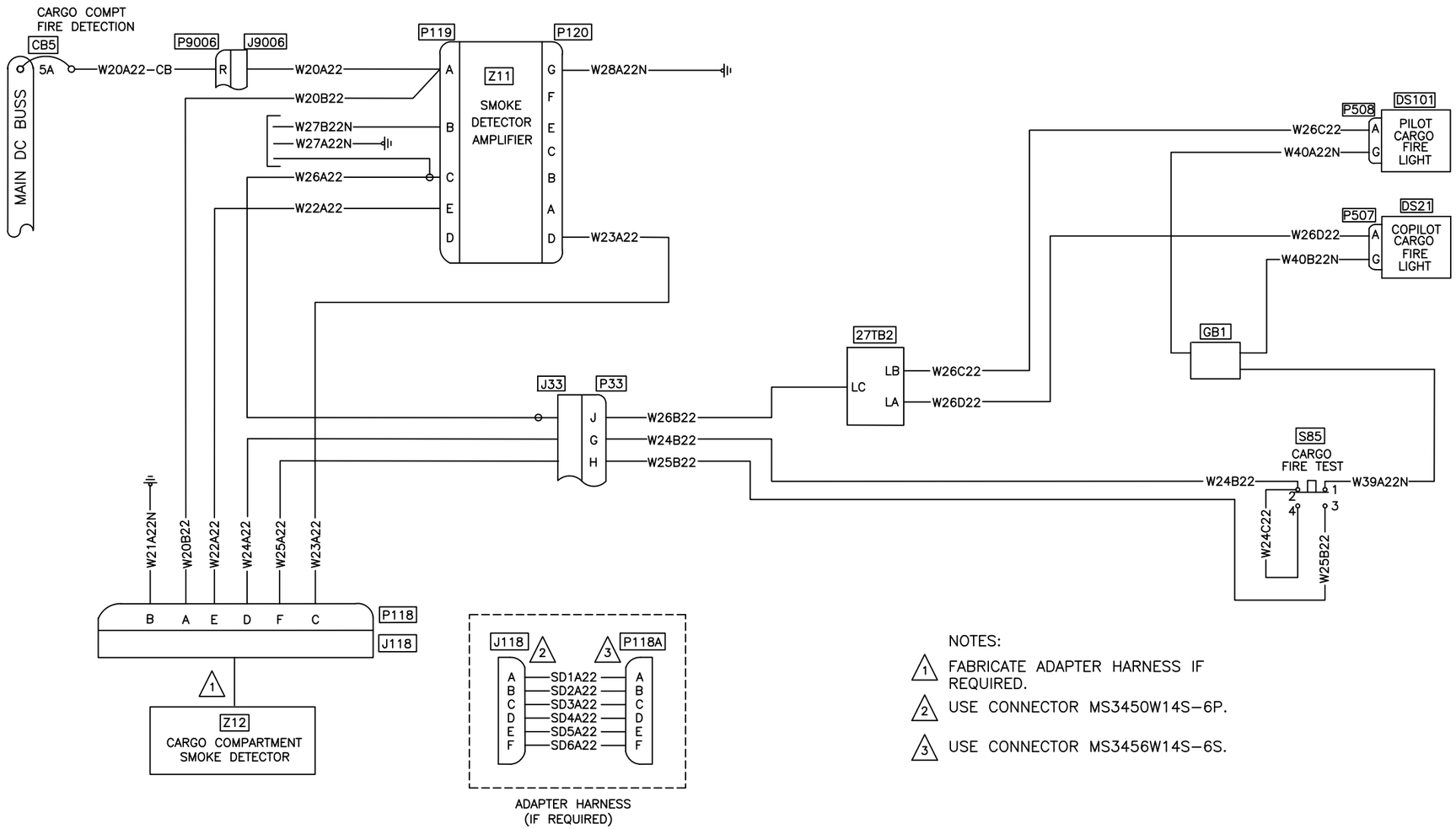

NOTES:

1. FABRICATE ADAPTER HARNESS IF REQUIRED.
2. USE CONNECTOR MS3450W14S–6P.
3. USE CONNECTOR MS3456W14S–6S.

Figure 98–55S. CARGO FIRE DETECTION
(EFFECTIVE ON ALL S/N, EXCEPT 30687, 30817 & 30599)

DESIGN LW	N/A	EAGLE COPTERS MAINTENANCE LTD. CALGARY, ALBERTA, CANADA	
CHECKED EB	RELEASED MP	DRAWING NO. D212–725–2–G2	REV. B SHEET 45 OF 57
DATE 23–01–10		TITLE FIGURE 98–55S	SCALE NTS

Copyright 2023 by EAGLE COPTERS MAINTENANCE LTD

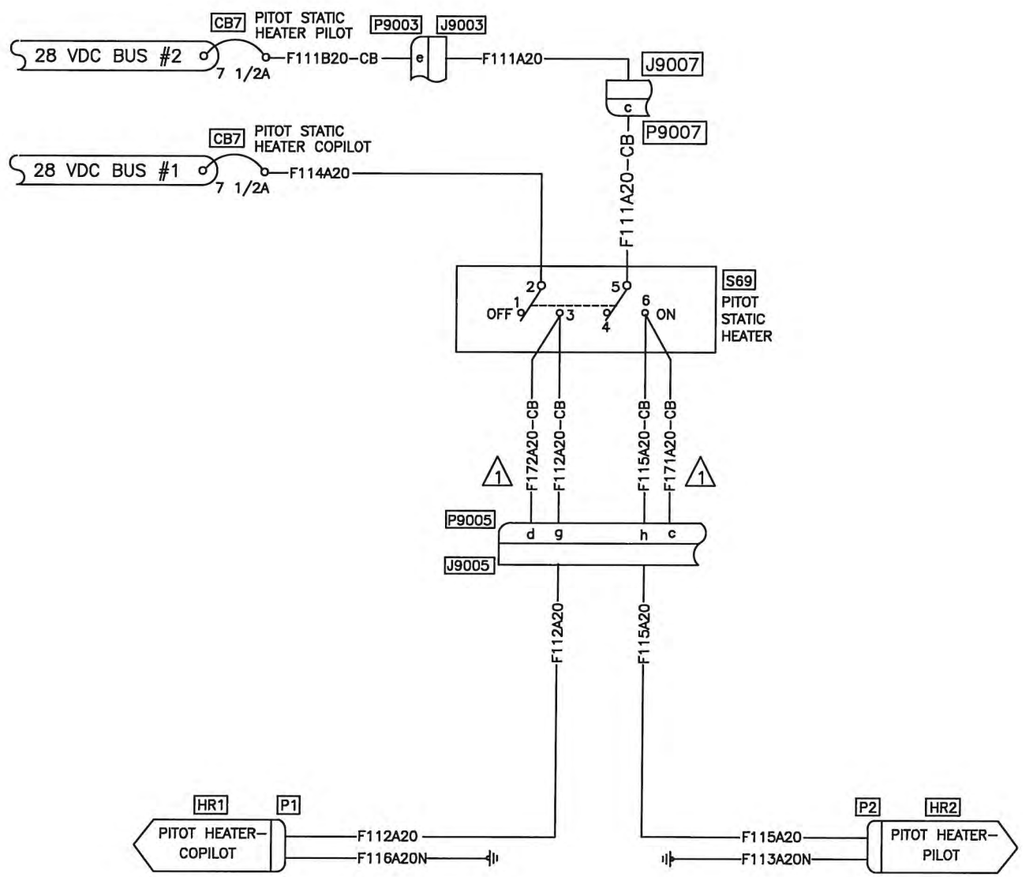

NOTES:

1. STATIC PORT HEATER WIRING INSTALLED IN P9005 ONLY. NO WIRING INSTALLED IN J9005.

ECN 20-105
2020.04.20

Figure 98-56S. PITOT STATIC HEATERS
(EFFECTIVE ON ALL S/N, EXCEPT 30687, 30931, 30576, 30817 & 30599)

DESIGN	DRAWN BY	DART AEROSPACE LTD HAWKESBURY, ONTARIO, CANADA	
RD	RD		
CHECKED	APPROVED	DRAWING NO.	REV. A
RD	KB	D212-725-2-G2	SHEET 46 OF 57
DATE		TITLE	SCALE
08.11.24		FIGURE 98-56S	NTS

Copyright 2008 by DART AEROSPACE LTD

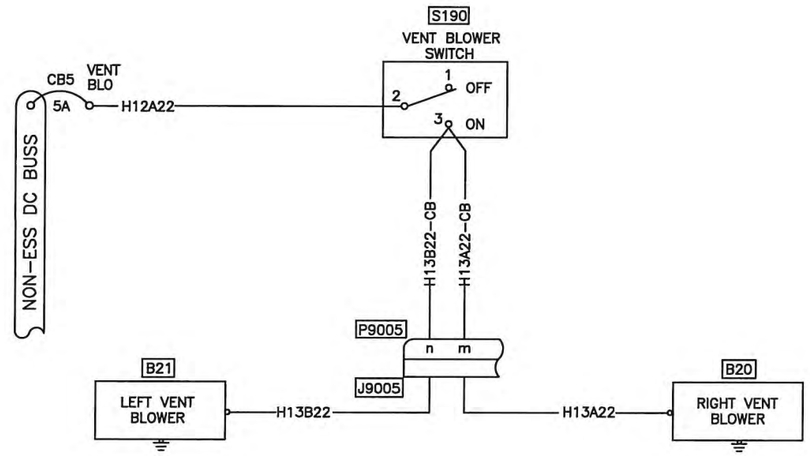

ECN 20-105
2020.04.20

Figure 98-57S. VENT BLOWERS
(EFFECTIVE ON ALL S/N, EXCEPT 30687, 30931, 30576, 30817 & 30599)

DESIGN: RD	DRAWN BY: RD	DART AEROSPACE LTD, HAWKESBURY, ONTARIO, CANADA	
CHECKED: RD	APPROVED: KB	DRAWING NO.: D212-725-2-G2	REV. A
DATE: 08.11.24		TITLE: FIGURE 98-57S	SCALE: NTS
			SHEET 47 OF 57

Copyright 2008 by DART AEROSPACE LTD

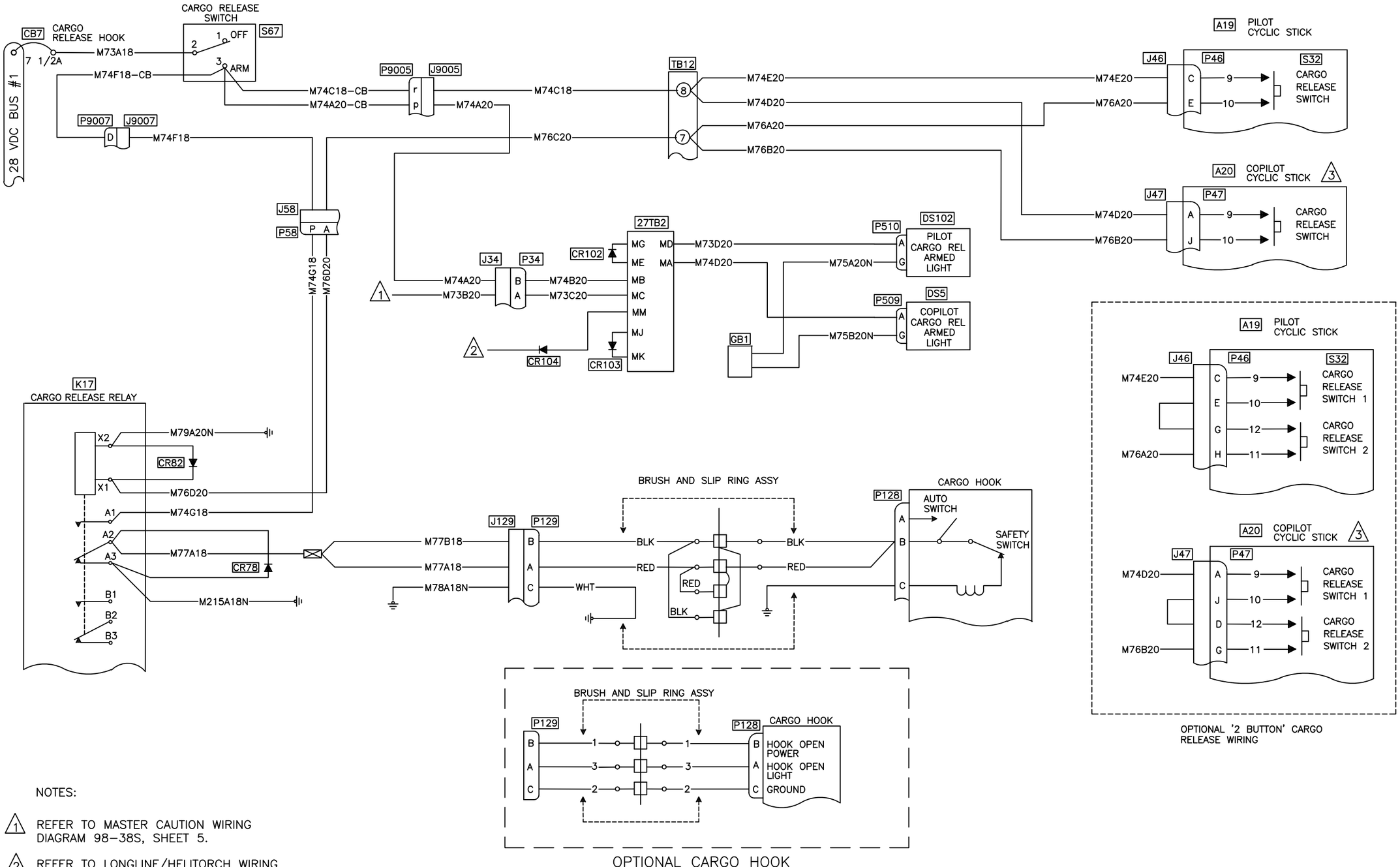

NOTES:

1. REFER TO MASTER CAUTION WIRING DIAGRAM 98-38S, SHEET 5.
2. REFER TO LONGLINE/HELITORCH WIRING DIAGRAM
3. IF COPILOT CYCLIC INSTALLED.

Figure 98-59S. CARGO RELEASE
(EFFECTIVE ON ALL S/N, EXCEPT 30687, 30817 & 30599)

DESIGN LW	N/A	EAGLE COPTERS MAINTENANCE LTD. CALGARY, ALBERTA, CANADA	
CHECKED EB	RELEASED MP	DRAWING NO. D212-725-2-G2	REV. B SHEET 48 OF 57
DATE 23-01-10		TITLE FIGURE 98-59S	SCALE NTS

Copyright 2023 by EAGLE COPTERS MAINTENANCE LTD

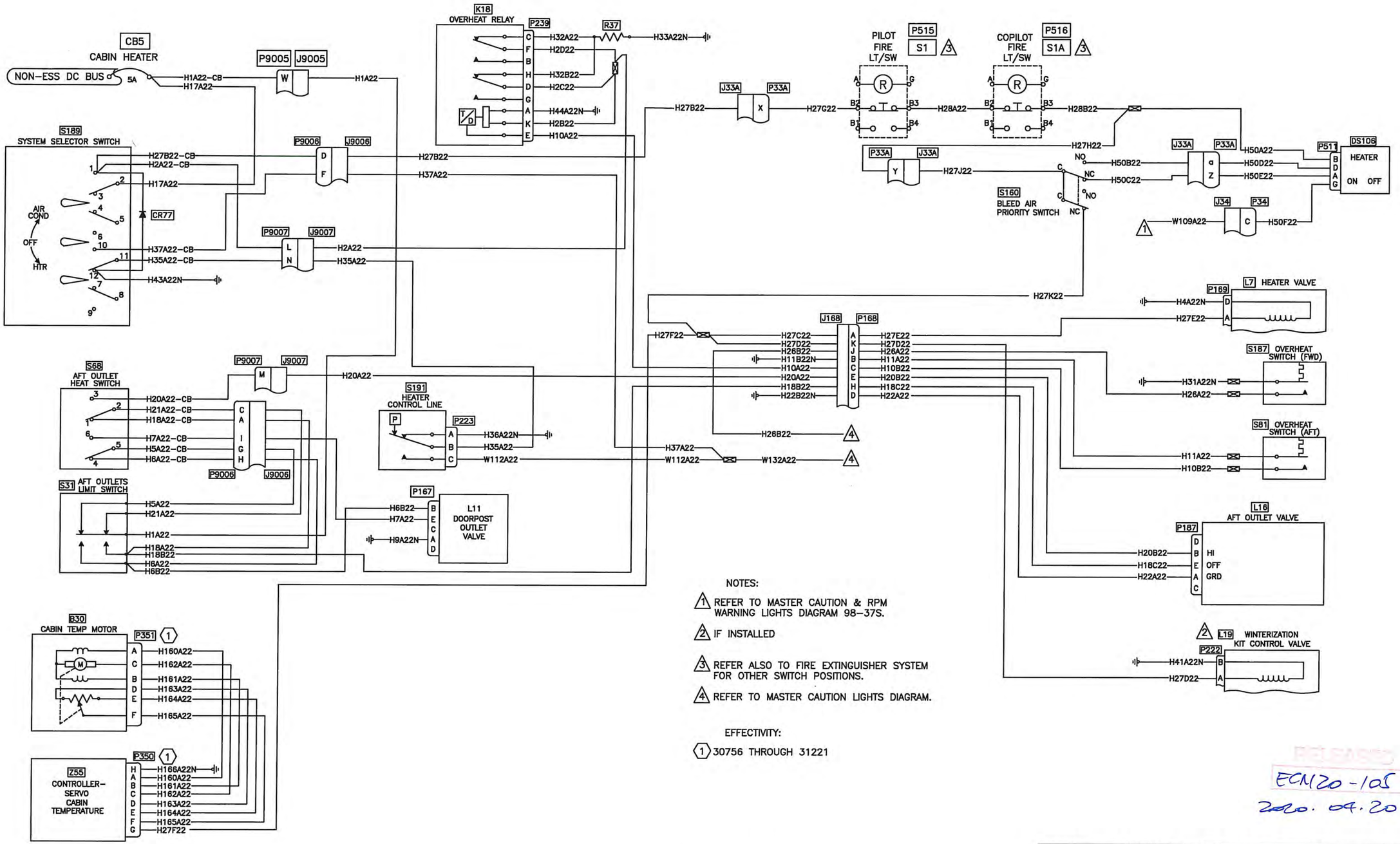

NOTES:

1. REFER TO MASTER CAUTION & RPM WARNING LIGHTS DIAGRAM 98–37S.
2. IF INSTALLED
3. REFER ALSO TO FIRE EXTINGUISHER SYSTEM FOR OTHER SWITCH POSITIONS.
4. REFER TO MASTER CAUTION LIGHTS DIAGRAM.

EFFECTIVITY:

(1) 30756 THROUGH 31221

Figure 98–60S. HEATER/AIR CONDITIONER
(EFFECTIVE ON ALL S/N, EXCEPT 30687, 30931, 30576, 30817 & 30599)

RELEASED
ECN 20-105
2020.04.20

DESIGN: RD	DRAWN BY: KB	DART AEROSPACE LTD, HAWKESBURY, ONTARIO, CANADA	
CHECKED: LJ / HS	APPROVED: KB	DRAWING NO.: D212–725–2–G2	REV. C
DATE: 17.10.25	TITLE: FIGURE 98–60S		SHEET 49 OF 57
			SCALE: NTS

Copyright 2008 by DART AEROSPACE LTD

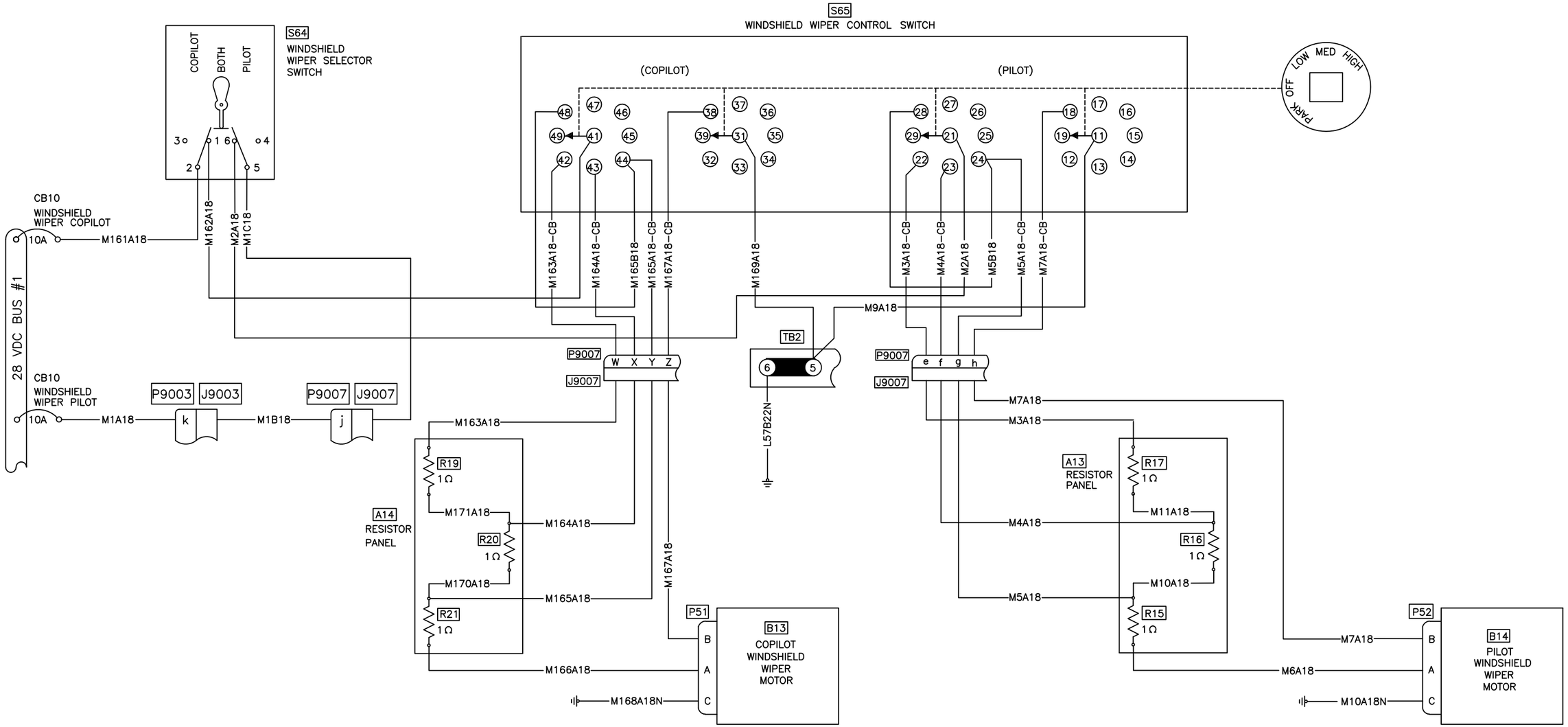

Figure 98–61S. WINDSHIELD WIPERS
(EFFECTIVE ON ALL S/N, EXCEPT 30687, 30817 & 30599)

DESIGN LW	N/A	EAGLE COPTERS MAINTENANCE LTD. CALGARY, ALBERTA, CANADA	
CHECKED EB	RELEASED MP	DRAWING NO. D212–725–2–G2	REV. B SHEET 50 OF 57
DATE 23–01–10		TITLE FIGURE 98–61S	SCALE NTS

Copyright 2023 by EAGLE COPTERS MAINTENANCE LTD

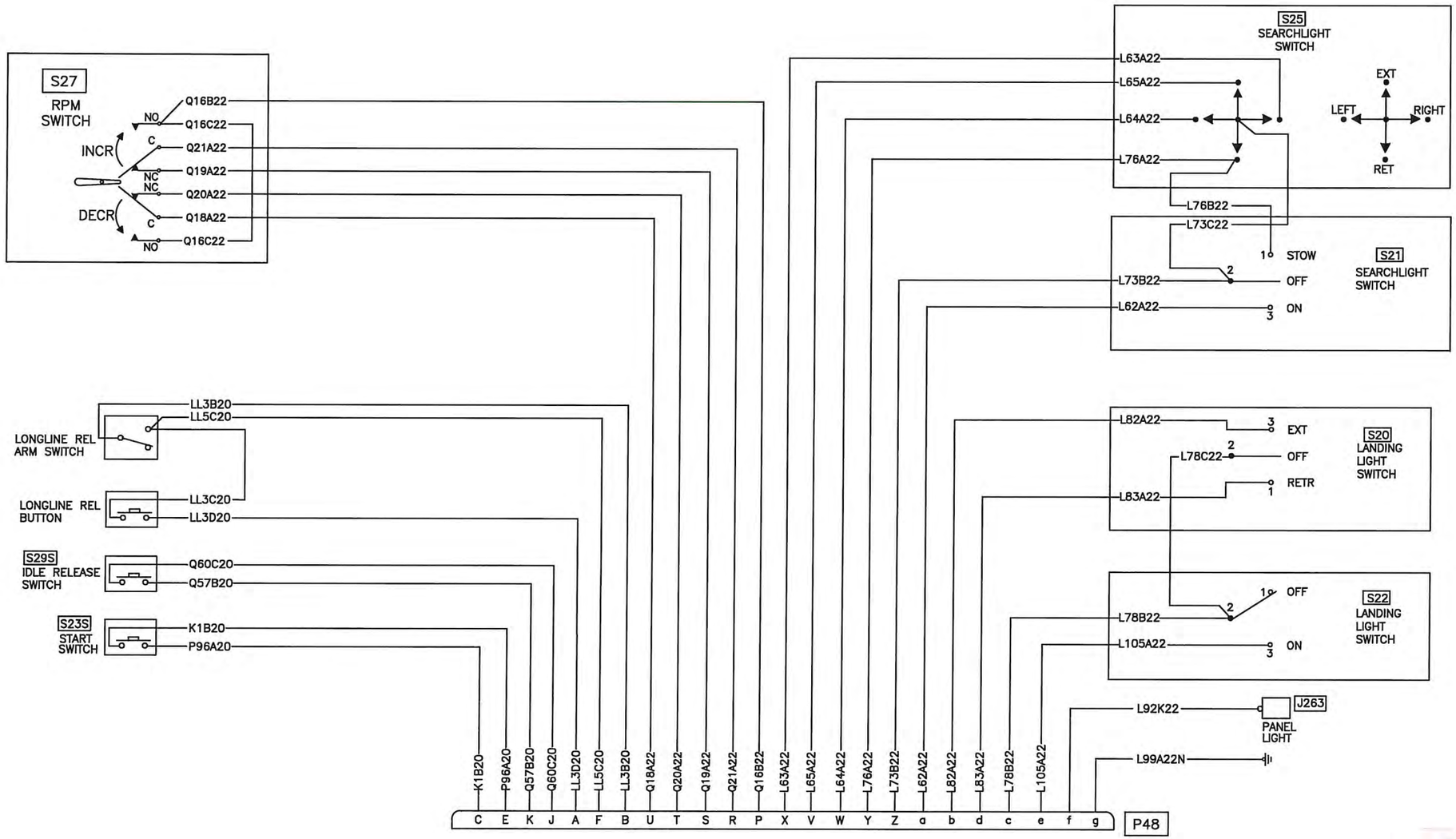

ECN 20-105
2020.04.20

Fig. 98–62S PILOT COLLECTIVE STICK WIRING
(EFFECTIVE ON ALL S/N, EXCEPT 30687, 30931, 30576, 30817 & 30599)

DESIGN: RD	DRAWN BY: RD	DART AEROSPACE LTD, HAWKESBURY, ONTARIO, CANADA	
CHECKED: RD	APPROVED: KB	DRAWING NO.: D212-725-2-G2	REV. A
DATE: 08.11.24		TITLE: FIGURE 98-62S	SHEET 51 OF 57
			SCALE: NTS

Copyright 2008 by DART AEROSPACE LTD

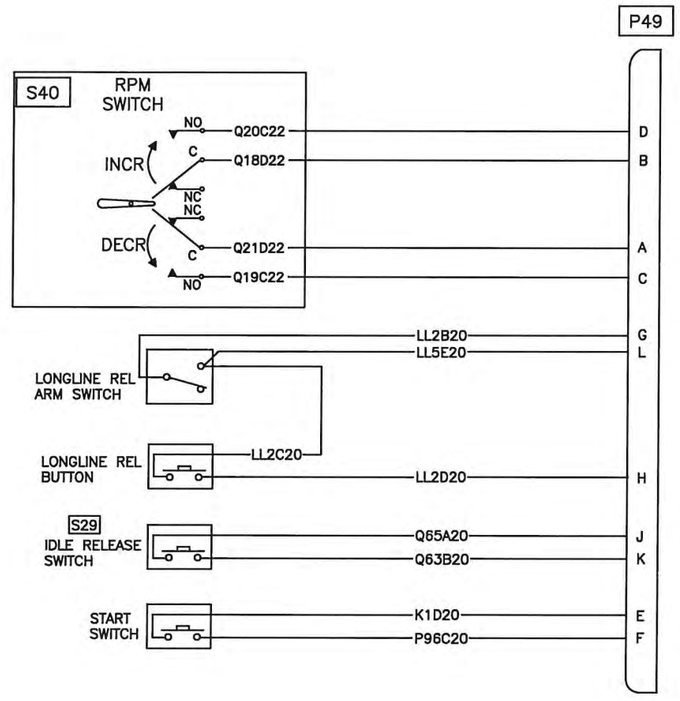

ECN 20-105
2020.04.20

Fig. 98–63S COPILOT COLLECTIVE STICK WIRING
(IF INSTALLED)
(EFFECTIVE ON ALL S/N, EXCEPT 30687, 30931, 30576, 30817 & 30599)

DESIGN	DRAWN BY	DART AEROSPACE LTD HAWKESBURY, ONTARIO, CANADA	
RD	RD		
CHECKED	APPROVED	DRAWING NO.	REV. A
RD	KB	D212–725–2–G2	SHEET 52 OF 57
DATE		TITLE	SCALE
08.11.24		FIGURE 98–63S	NTS

Copyright 2008 by DART AEROSPACE LTD

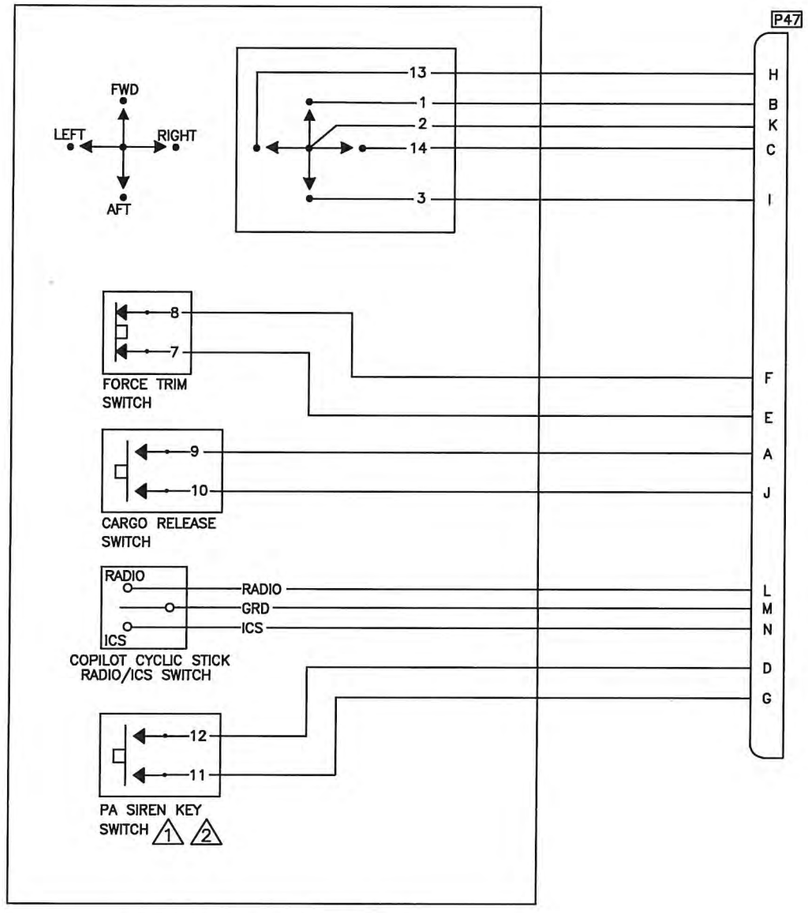

COPILOT's CYCLIC STICK

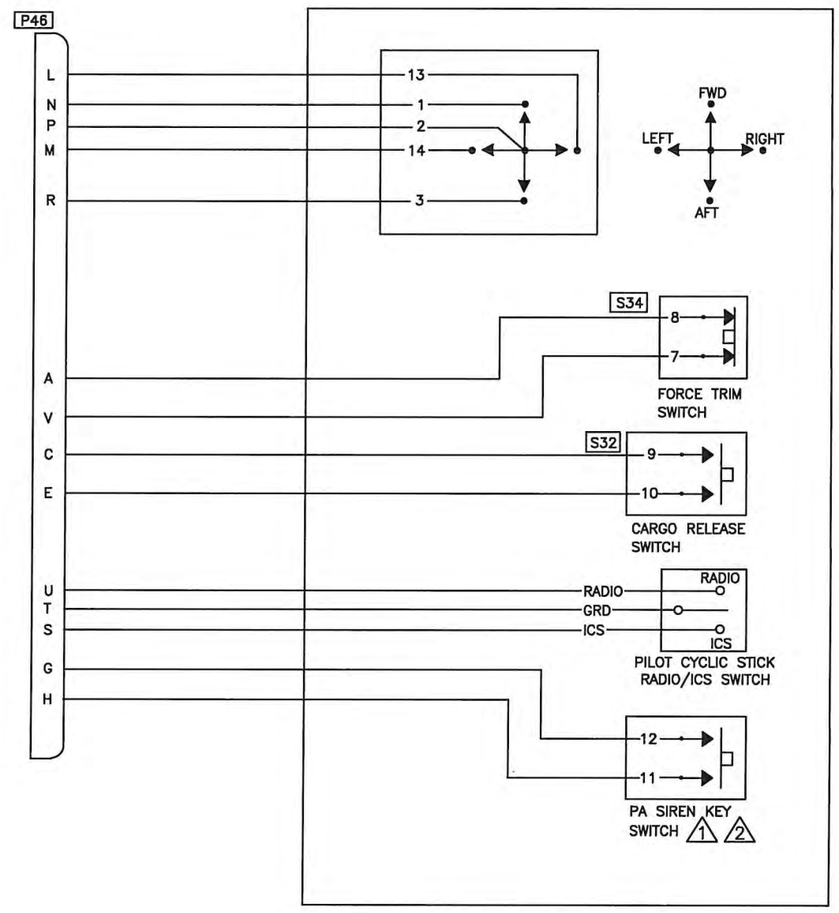

PILOT's CYCLIC STICK

NOTES:

1. IF INSTALLED
2. MAY ALSO BE USED AS SECOND CARGO RELEASE SWITCH. PA SIREN KEY IS THEN MOVED TO 'LEFT' ON CHINA HAT SWITCH.

ECN 20-105
2020.04.20

Fig. 98–64S PILOT's & COPILOT's CYCLIC STICK WIRING DIAGRAM
(EFFECTIVE ON ALL S/N, EXCEPT 30687, 30931, 30576, 30817 & 30599)

DESIGN	DRAWN BY	DART AEROSPACE LTD HAWKESBURY, ONTARIO, CANADA	
RD	RD		
CHECKED	APPROVED	DRAWING NO.	REV. A
RD	KB	D212-275-2-G2	SHEET 53 OF 57
DATE		TITLE	SCALE
08.11.24		FIGURE 98–64S	NTS

Copyright 2008 by DART AEROSPACE LTD

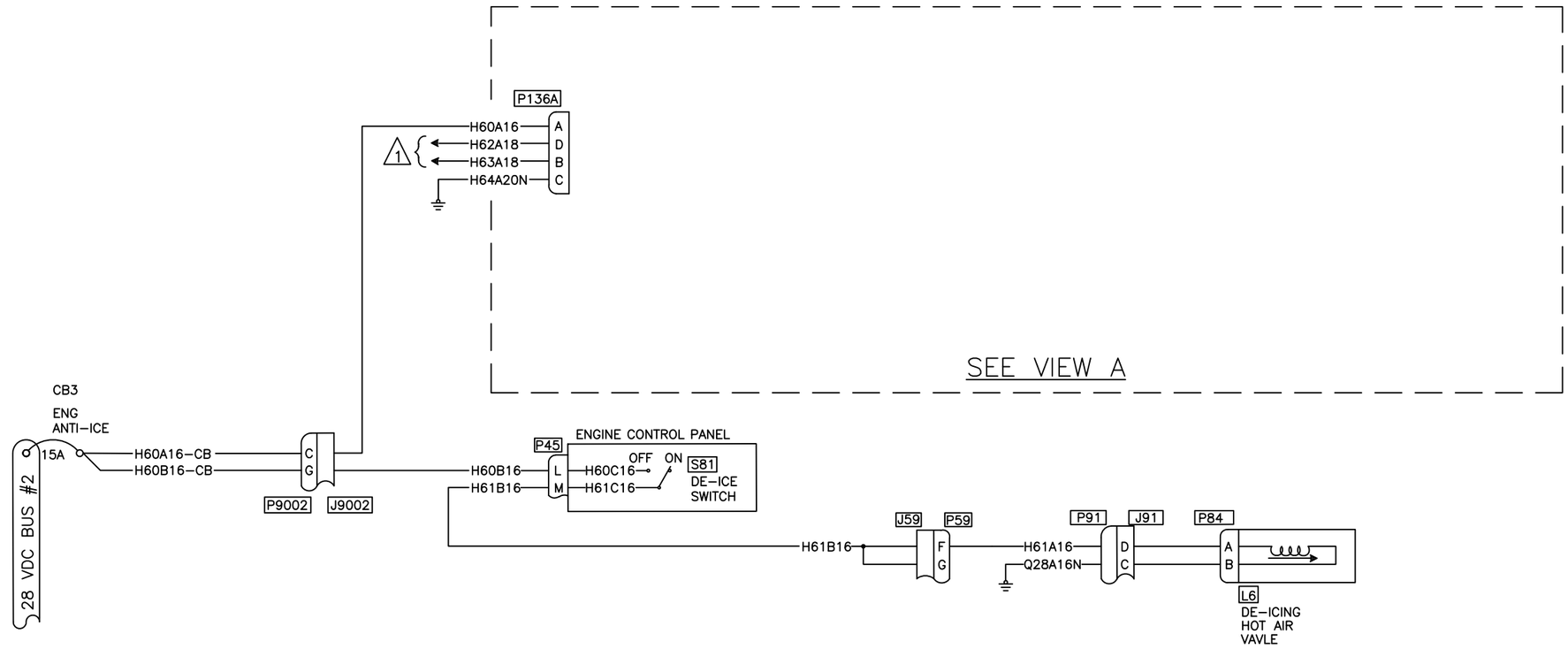

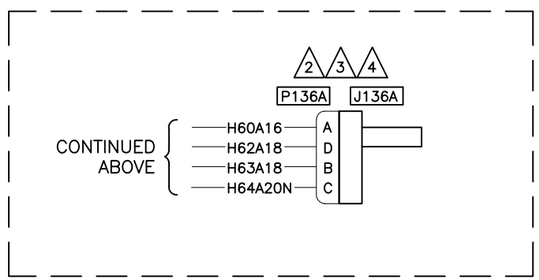

VIEW A

NOTES:

1. REFER TO MASTER CAUTION DIAGRAM 98-38S, SHEET 2
2. WIRING PROVISIONS ONLY
3. IF ICE DETECTION SYSTEM IS INSTALLED MASTER CAUTION PANEL P/N: D212-725-7-017 MUST BE USED.
4. (D) IF ICE DETECTION SYSTEM IS NOT INSTALLED MASTER CAUTION PANEL P/N: D212-725-7-017 OR D212-725-7-019/-021 MAY BE USED.

Figure 98-65S. ENGINE ANTI-ICING
(EFFECTIVE ON ALL S/N, EXCEPT 30687, 30817 & 30599)

DESIGN LW	N/A	EAGLE COPTERS MAINTENANCE LTD. CALGARY, ALBERTA, CANADA	
CHECKED EB	RELEASED MP	DRAWING NO. D212-725-2-G2	REV. E SHEET 54 OF 57
DATE 23-01-10		TITLE FIGURE 98-65S	SCALE NTS

Copyright 2023 by EAGLE COPTERS MAINTENANCE LTD

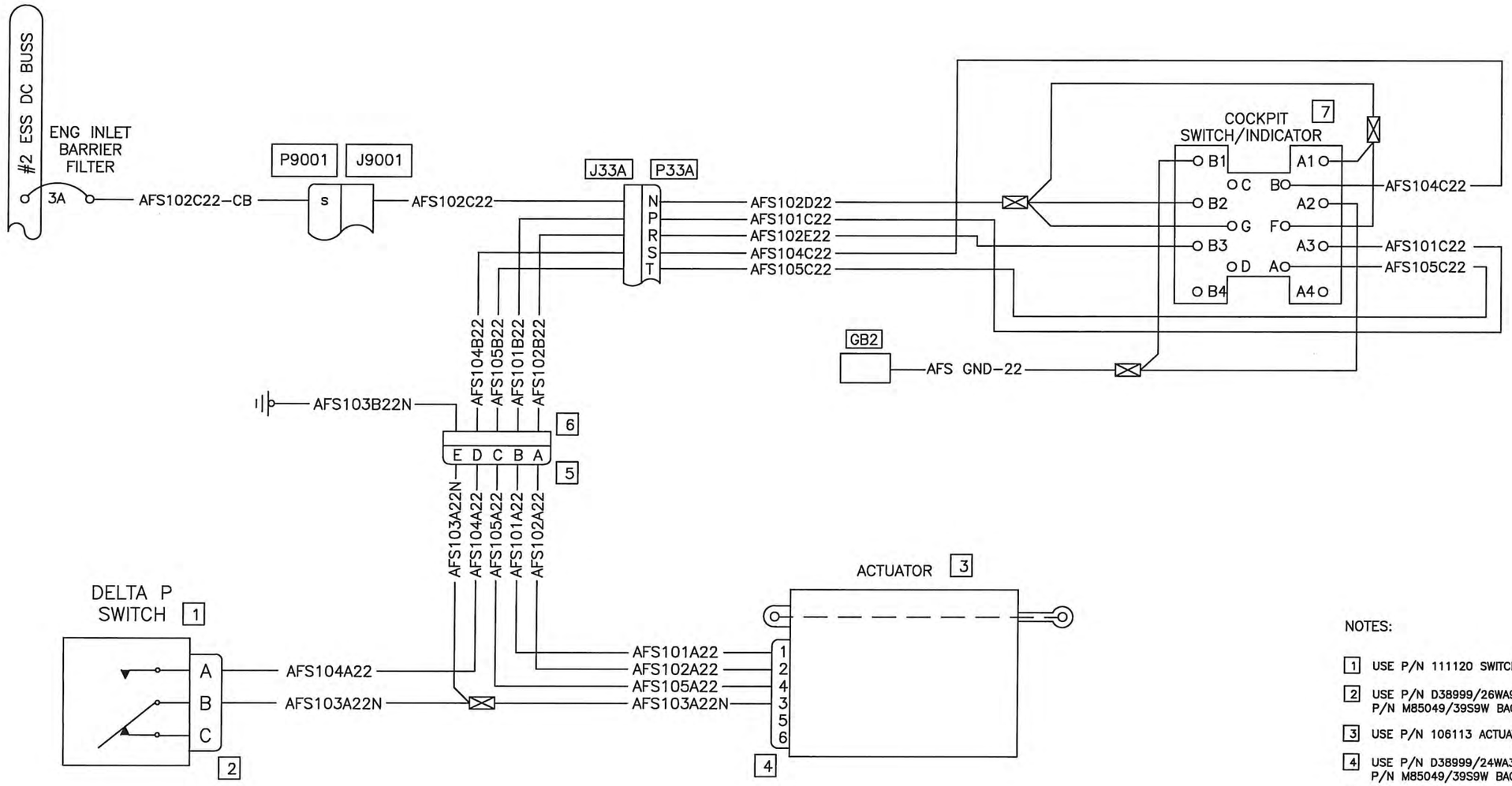

NOTES:

1. USE P/N 111120 SWITCH
2. USE P/N D38999/26WA98SA CONNECTOR AND P/N M85049/39S9W BACKSHELL
3. USE P/N 106113 ACTUATOR
4. USE P/N D38999/24WA35SN CONNECTOR AND P/N M85049/39S9W BACKSHELL
5. USE P/N D38999/26WB5PN CONNECTOR AND P/N M85049/39S9W BACKSHELL
6. USE P/N D38999/20WB5SN CONNECTOR AND P/N M85049/39S9W BACKSHELL
7. USE P/N LED–42–25–BB–31493 SWITCH/INDICATOR AND 18–200 CONNECTOR SUPPLIED WITH KIT

THIS DOCUMENT CONTAINS INFORMATION OF A PROPRIETARY NATURE WHICH IS THE PROPERTY OF AEROSPACE FILTRATION SYSTEMS INC. CHANGES HAVE BEEN MADE TO ILLUSTRATE ADDITIONAL CONNECTORS AS INSTALLED IN EAGLE 'SINGLE'

ECN 20-105
2020.09.20

AFS INLET BARRIER FILTER SYSTEM
(IF INSTALLED PER SH07–49)
(EFFECTIVE ON ALL S/N, EXCEPT 30687, 30931, 30576, 30817 & 30599)

DESIGN	DRAWN BY	DART AEROSPACE LTD HAWKESBURY, ONTARIO, CANADA	
RD	RD		
CHECKED	APPROVED	DRAWING NO.	REV. A
RD	KB	D212–725–2–G2	SHEET 55 OF 57
DATE		TITLE	SCALE
08.11.24		FIGURE 98–66S	NTS

Copyright 2008 by DART AEROSPACE LTD

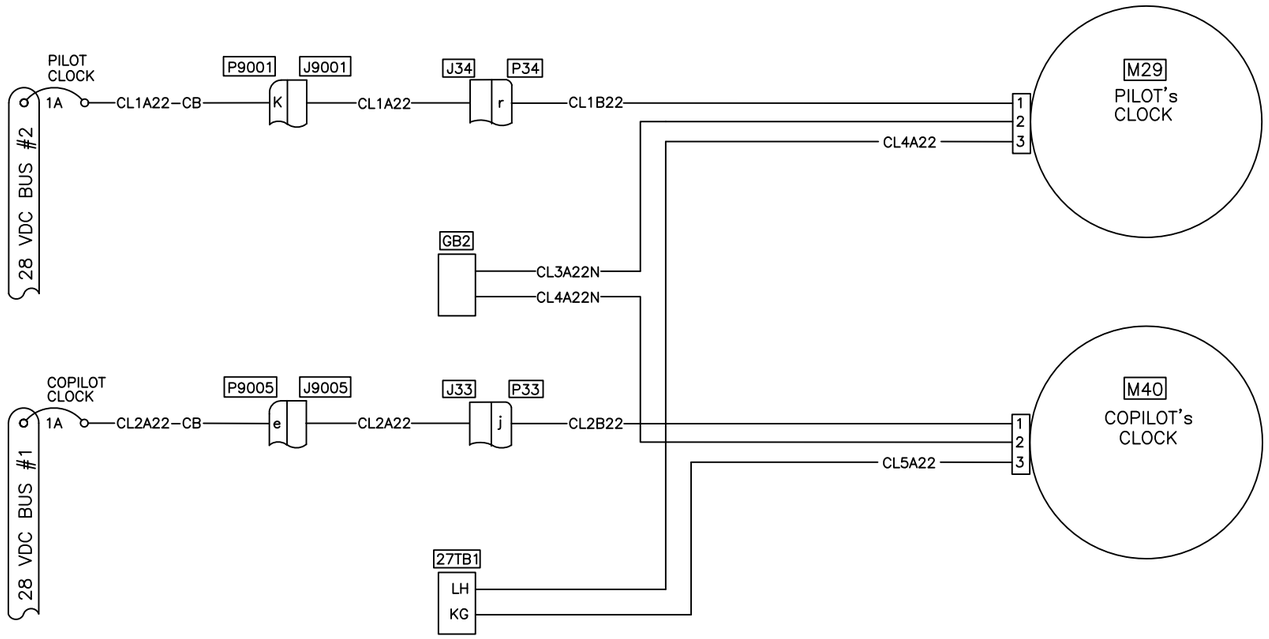

Figure 98–67S. PILOT AND COPILOT CLOCKS

(EFFECTIVE ON ALL S/N, EXCEPT 30687, 30817 & 30599)

DESIGN LW	N/A	EAGLE COPTERS MAINTENANCE LTD. CALGARY, ALBERTA, CANADA	
CHECKED EB	RELEASED MP	DRAWING NO. D212–725–2–G2	REV. B SHEET 56 OF 57
DATE 23–01–10		TITLE FIGURE 98–67S	SCALE NTS

Copyright 2023 by EAGLE COPTERS MAINTENANCE LTD

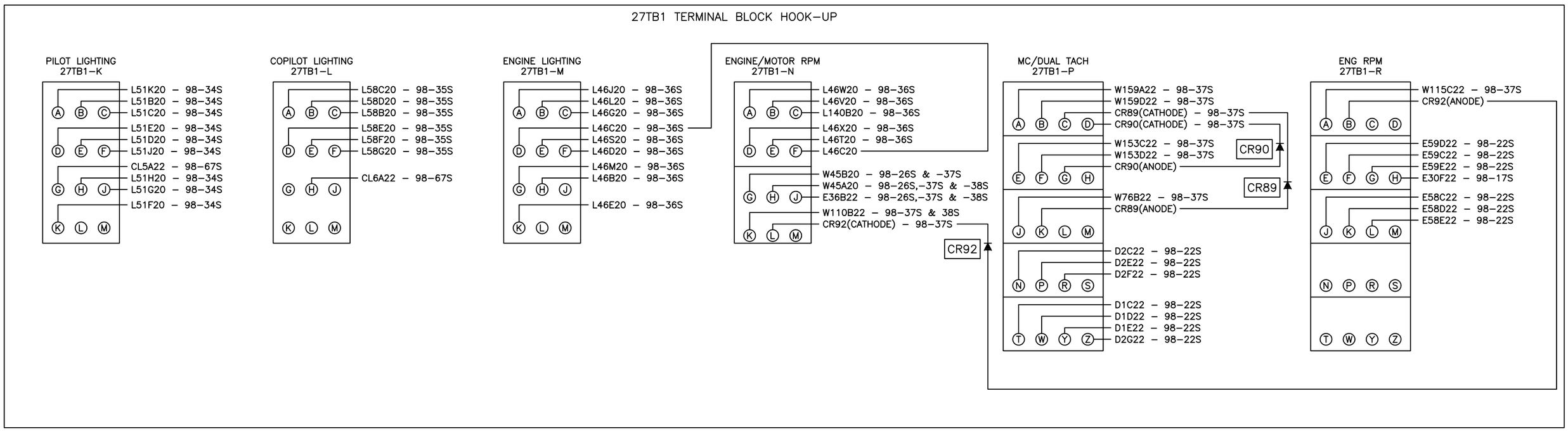

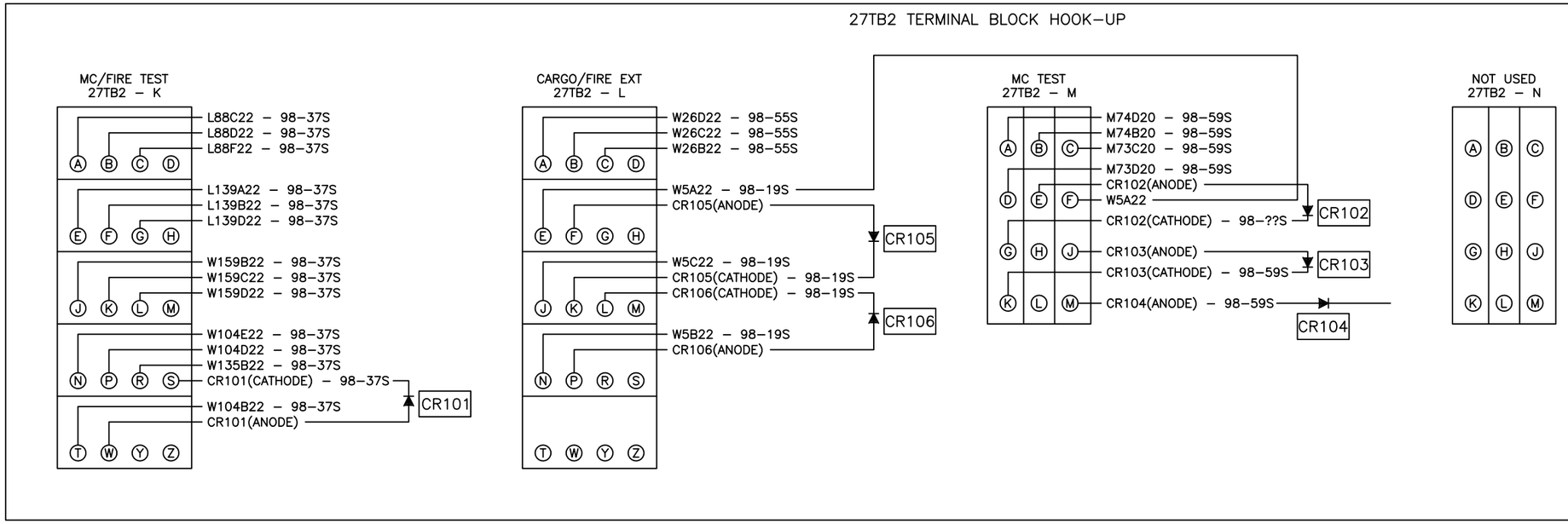

Figure 98–68S. TERMINAL BLOCK HOOKUP
(EFFECTIVE ON ALL S/N, EXCEPT 30687, 30817 & 30599)

DESIGN LW	N/A	EAGLE COPTERS MAINTENANCE LTD. CALGARY, ALBERTA, CANADA	
CHECKED EB	RELEASED MP	DRAWING NO. D212–725–2–G2	REV. B SHEET 57 OF 57
DATE 23–01–10		TITLE FIGURE 98–68S	SCALE NTS

Copyright 2023 by EAGLE COPTERS MAINTENANCE LTD

NOTES:

1. PERFORM ALL WORK IN ACCORDANCE WITH BELL HELICOPTER STANDARD PRACTICES MANUAL BHT-ELEC-SPM.
2. ALL NEW UNSHIELDED WIRE USE M22759/41-(XX)-9 OR EQUIVALENT TYPE WIRE. (M22759/41-(XX)-9 IS NOT INTENDED TO BE USED IN SOLDER APPLICATIONS, SOLDERABILITY CAN BE ACHIEVED WITH THE PROPER SOLDER. USE CRIMP SPLICES FOR REPAIR). ALL WIRES 22 AWG UNLESS OTHERWISE SPECIFIED BY WIRE CODE. ALL JUMPERS TO BE LESS THAN 6 INCHES.
3. ALL AIRFRAME GROUNDS SHALL BE VIA AMP LUG OR GROUNDING BLOCK AND PROVIDE SEPARATE GROUND STUD LOCATIONS FOR DC POWER GROUNDS, AC POWER GROUNDS, CHASSIS GROUNDS, SIGNAL GROUNDS AND SHIELD GROUNDS.
4. ALL EQUIPMENT BONDING TO ADJACENT AIRFRAME STRUCTURE TO BE 0.003 OHM OR LESS. ALL ELECTRICAL GROUNDING AND BONDING TO BE INSTALLED IN ACCORDANCE WITH THE LATEST REVISION OF BHT-ELEC-SPM CHAPTER 8.
5. ALL TERMINALS TO BE INSTALLED IN ACCORDANCE WITH THE LATEST REVISION OF BHT-ELEC-SPM PARAGRAPH 4-9.
6. ALL CONNECTORS TO BE INSTALLED IN ACCORDANCE WITH THE LATEST REVISION OF BHT-ELEC-SPM CHAPTER 5. ENSURE ALL UNUSED CONNECTOR CONTACTS ARE FILLED WITH SPARE PINS/SOCKETS OR PLASTIC GROMMET SEALING PLUGS. ENSURE ALL BULKHEAD MOUNTED CONNECTORS ARE PROPERLY BONDED TO AIRFRAME.
7. ENSURE ALL SWITCHES, CIRCUIT BREAKERS, AND REMOTE MOUNTED BOXES ARE LABELED WITH A CONSISTENT SIZE, FONT, COLOR, BACKGROUND AND ARE ILLUMINATED CONSISTENT AS EXISTING LABELS.
8. ROUTE ALL WIRES AND CABLES WITH EXISTING WIRE ROUTES WHERE POSSIBLE AND CLAMP IN ACCORDANCE WITH THE LATEST REVISION OF BHT-ELEC-SPM CHAPTER 6. WIRES MUST BE ROUTED WITH A MINIMUM OF 6 INCHES OF SEPARATION FROM OXYGEN AND FLUID LINES (MIN 2 INCHES IF WIRES IN CONDUIT).
9. INSTALL SYSTEM IN ACCORDANCE WITH THE LATEST REVISION OF THE MANUFACTURES INSTALLATION MANUAL.
10. POWER WIRES NOT TO EXCEED 45 FT FROM A 15A CIRCUIT BREAKER.

Figure 4 Installation Wiring Diagram

DESIGN	EB	**EAGLE COPTERS LTD** CALGARY, AB, CANADA
DRAWN	EB	
CHECKED	WK	DRAWING NO. REV. A
MFG. APPR.	CD/CG	TB-E212-725-4 SHEET 7 OF 8
APPROVED	KB	TITLE
DE APPR.		UTILITY POWER PLUG INSTALLATION
DATE 2021-12-17		COPYRIGHT © 2021 BY EAGLECOPTERS LTD. THIS DOCUMENT IS PRIVET AND CONFIDENTIAL AND IS SUPPLIED ON THE EXPRESS CONDITION THAT IT IS NOT TO BE USED FFR ANY PURPOSE OR COPIED OR COMMUNICATED TO ANY OTHER PERSON WITHOUT WRITTEN PERMISSION FROM EAGLECOPTERS LTD.

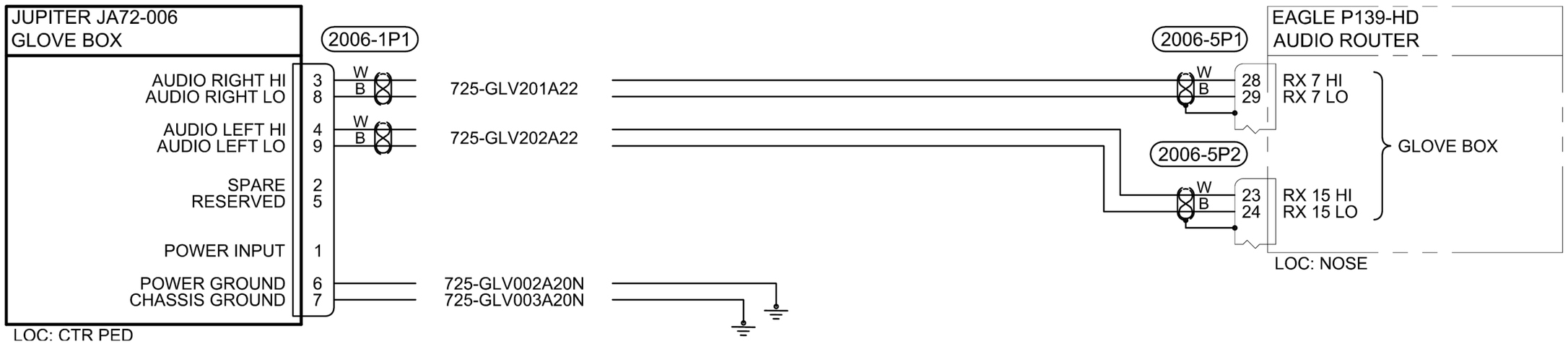

Figure 8 - Updated Glovebox Wiring Installation

• COPYRIGHT © 2022 BY EAGLE COPTERS MAINTENANCE LTD •
THIS DOCUMENT IS PRIVATE AND CONFIDENTIAL AND IS SUPPLIED ON THE EXPRESS CONDITION THAT IT IS NOT TO BE USED FOR ANY PURPOSE OR COPIED OR COMMUNICATED TO ANY OTHER PERSON WITHOUT WRITTEN PERMISSION FROM EAGLE COPTERS MAINTENANCE LTD.

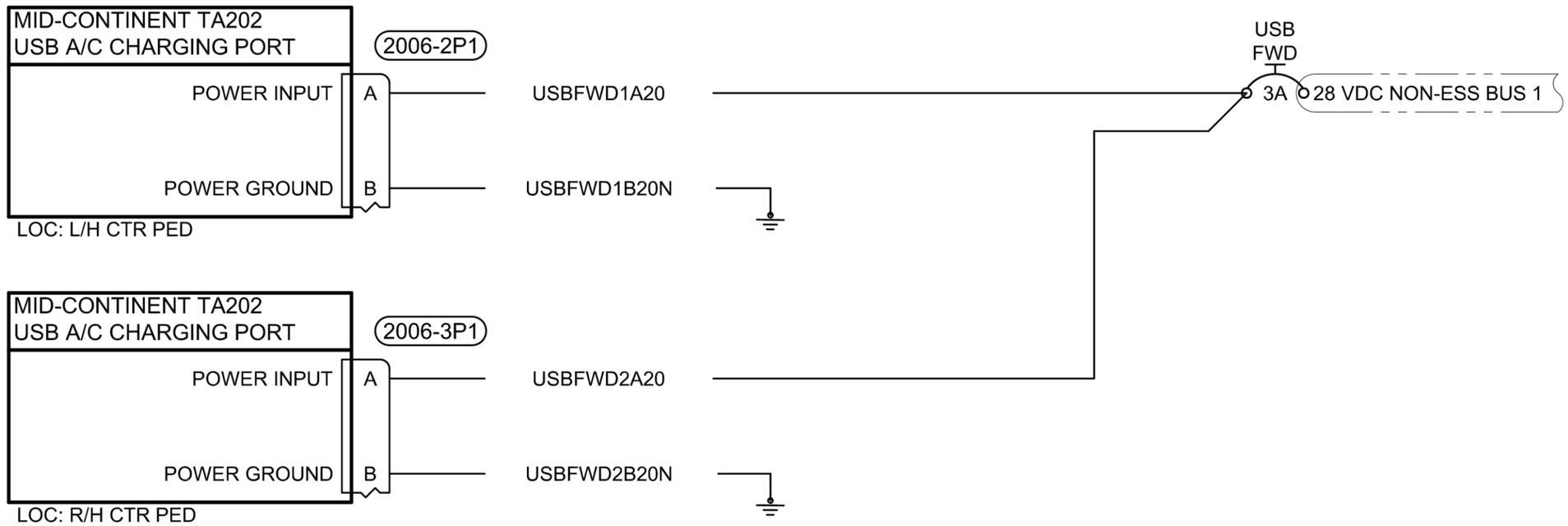

Figure 9 - FWD USB Wiring Installation

• COPYRIGHT © 2022 BY EAGLE COPTERS MAINTENANCE LTD •
THIS DOCUMENT IS PRIVATE AND CONFIDENTIAL AND IS SUPPLIED ON THE EXPRESS CONDITION THAT IT IS NOT TO BE USED FOR ANY PURPOSE OR COPIED OR COMMUNICATED TO ANY OTHER PERSON WITHOUT WRITTEN PERMISSION FROM EAGLE COPTERS MAINTENANCE LTD.

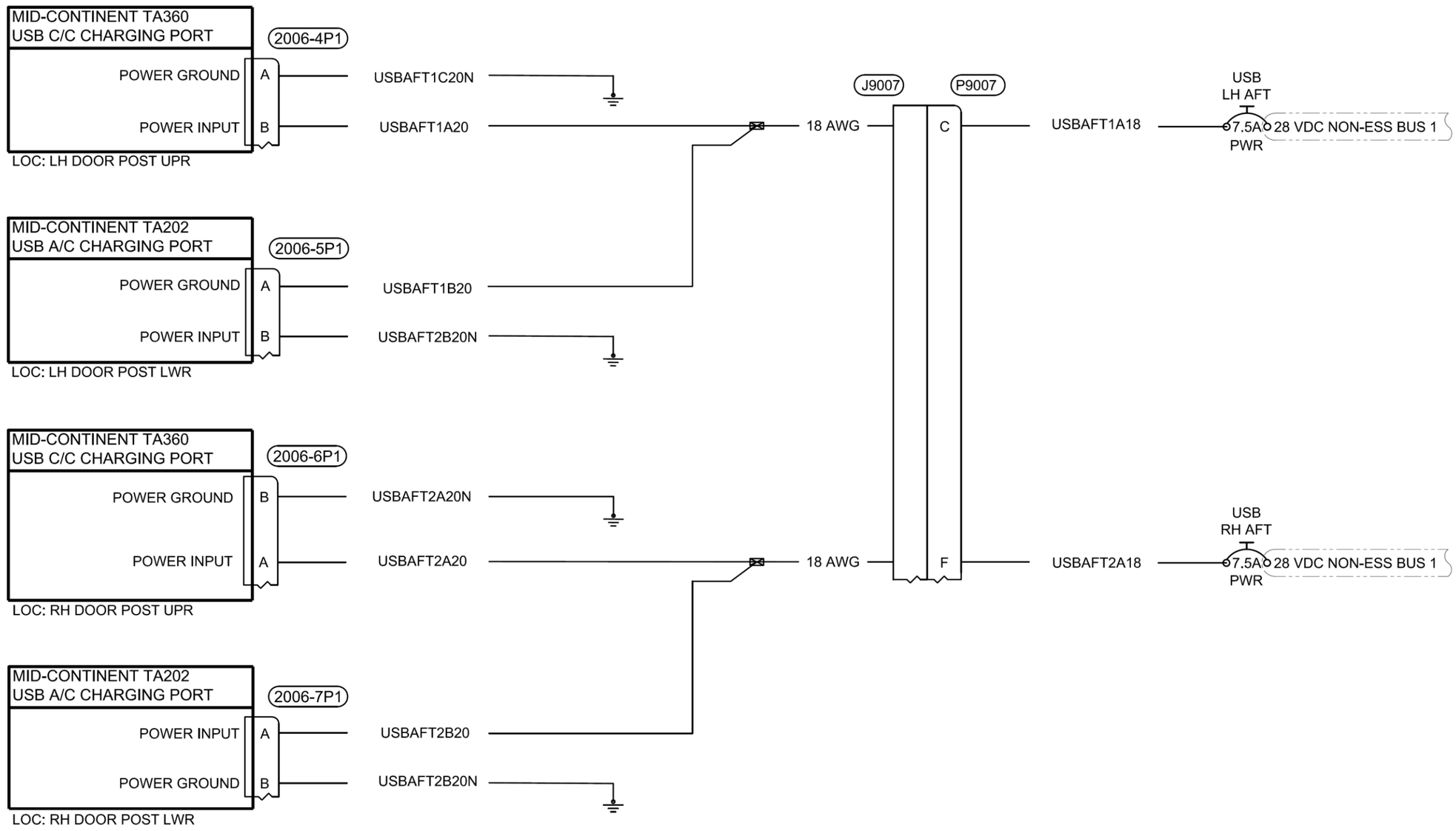

Figure 10 - AFT USB Wiring Installation

• COPYRIGHT © 2022 BY EAGLE COPTERS MAINTENANCE LTD •
THIS DOCUMENT IS PRIVATE AND CONFIDENTIAL AND IS SUPPLIED ON THE EXPRESS CONDITION THAT IT IS NOT TO BE USED FOR ANY PURPOSE OR COPIED OR COMMUNICATED TO ANY OTHER PERSON WITHOUT WRITTEN PERMISSION FROM EAGLE COPTERS MAINTENANCE LTD.

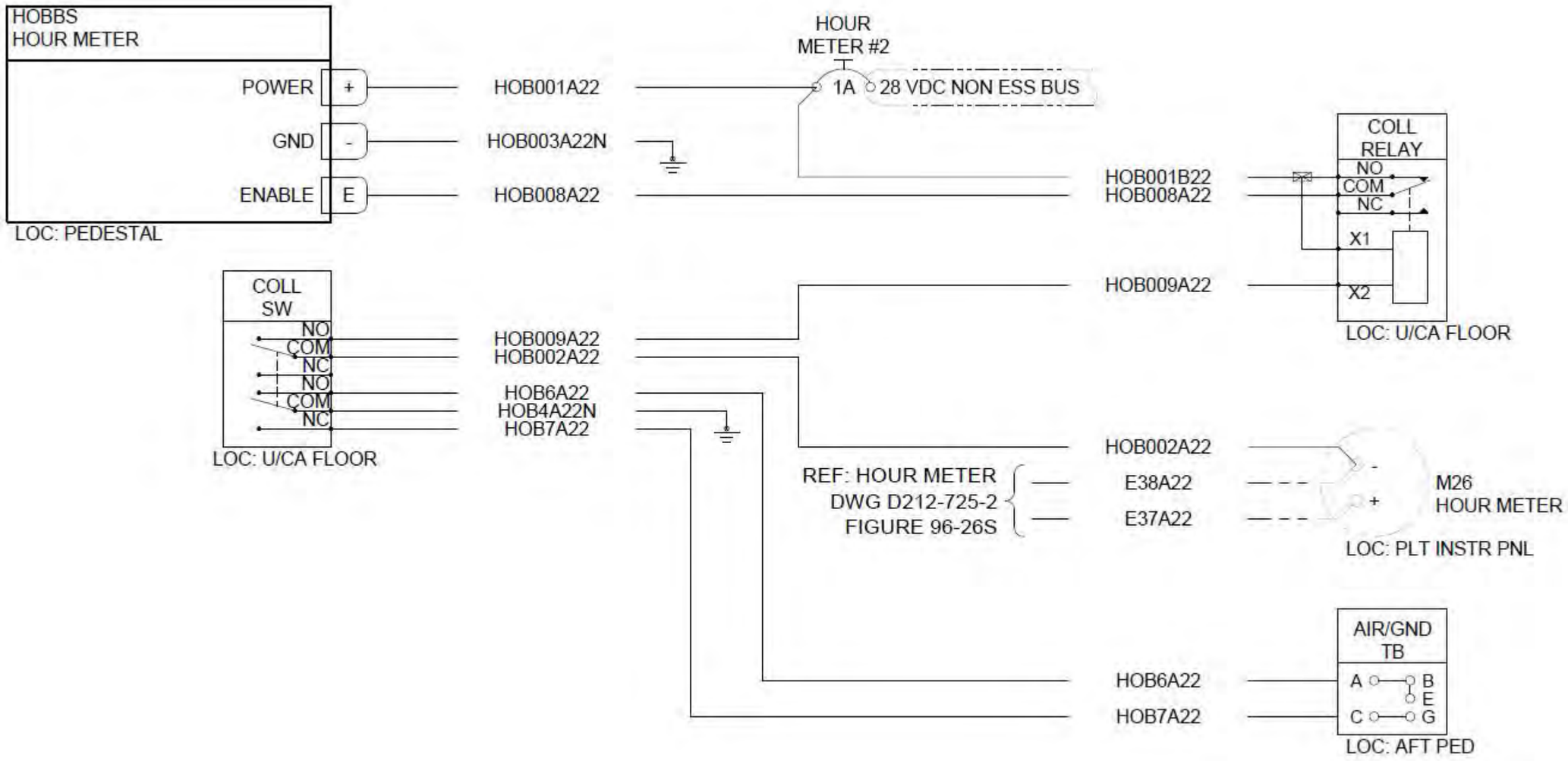

Figure 2 – Second Hour Meter Install Wiring Diagram -011 Configuration

• COPYRIGHT © 2022 BY EAGLE COPTERS MAINTENANCE LTD •
THIS DOCUMENT IS PRIVATE AND CONFIDENTIAL AND IS SUPPLIED ON THE EXPRESS CONDITION THAT IT IS NOT TO BE USED FOR ANY PURPOSE OR COPIED OR COMMUNICATED TO ANY OTHER PERSON WITHOUT WRITTEN PERMISSION FROM EAGLE COPTERS MAINTENANCE LTD.

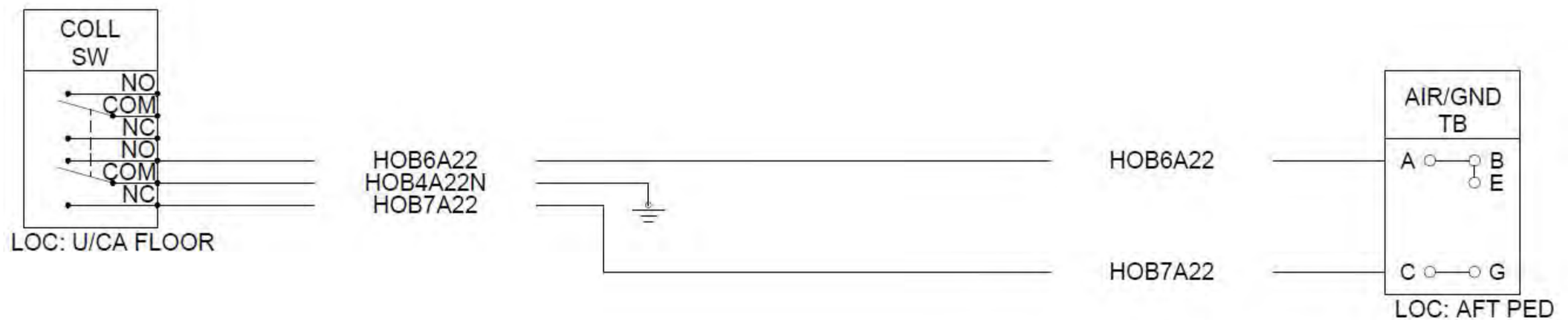

Figure 3 - Collective Switch Install Wiring Diagram -013 Configuration

• COPYRIGHT © 2022 BY EAGLE COPTERS MAINTENANCE LTD •
THIS DOCUMENT IS PRIVATE AND CONFIDENTIAL AND IS SUPPLIED ON THE EXPRESS CONDITION THAT IT IS NOT TO BE USED FOR ANY PURPOSE OR COPIED OR COMMUNICATED TO ANY OTHER PERSON WITHOUT WRITTEN PERMISSION FROM EAGLE COPTERS MAINTENANCE LTD.

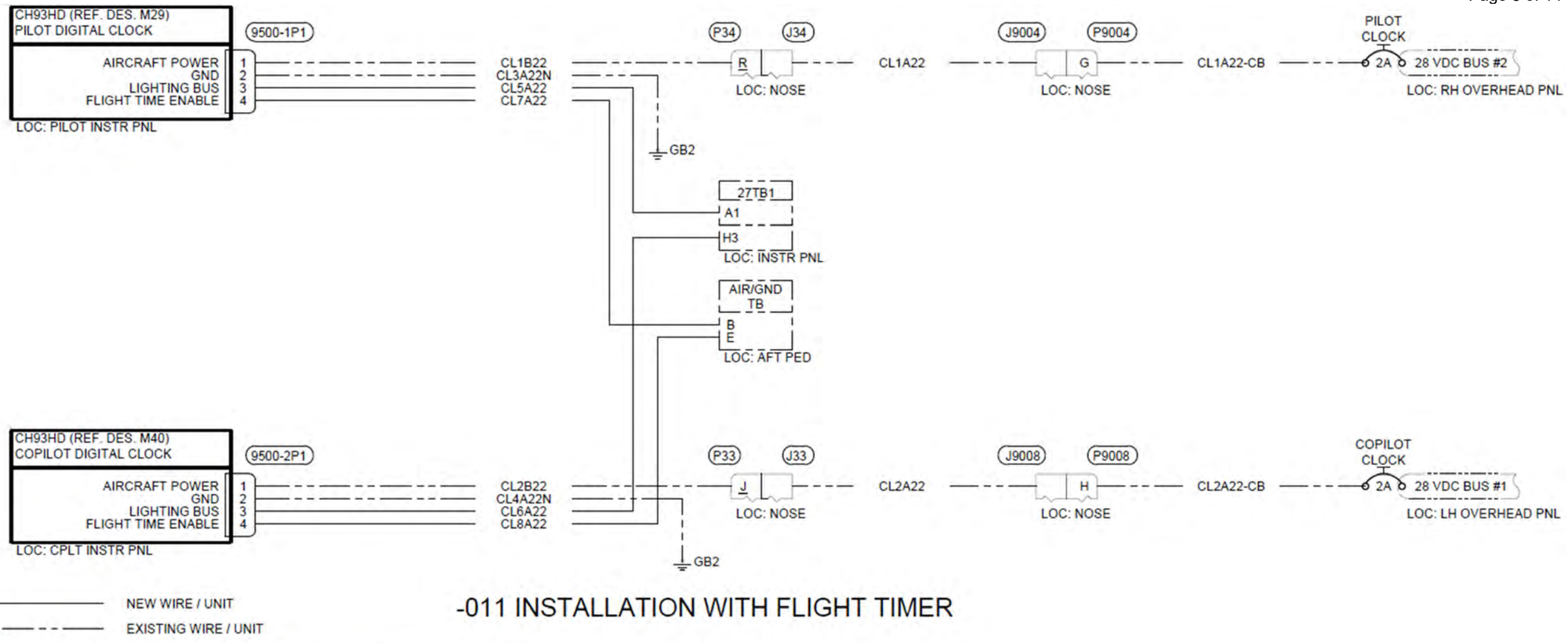

-011 INSTALLATION WITH FLIGHT TIMER

NOTES:

1. PERFORM ALL WORK IN ACCORDANCE WITH BELL HELICOPTER STANDARD PRACTICES MANUAL BHT-ELEC-SPM.
2. ALL NEW UNSHIELDED WIRE USE M22759/41-(XX)-9 OR EQUIVALENT TYPE WIRE. (M22759/41-(XX)-9 IS NOT INTENDED TO BE USED IN SOLDER APPLICATIONS, SOLDERABILITY CAN BE ACHIEVED WITH THE PROPER SOLDER. USE CRIMP SPLICES FOR REPAIR). ALL WIRES 22 AWG UNLESS OTHERWISE SPECIFIED BY WIRE CODE. ALL JUMPERS TO BE LESS THAN 6 INCHES.
3. ALL NEW SHIELDED WIRE USE M27500-(XX)SM(X)N23 OR EQUIVALENT TYPE WIRE. (M27500-(XX)SM(X)N23 IS NOT INTENDED TO BE USED IN SOLDER APPLICATIONS, SOLDERABILITY CAN BE ACHIEVED WITH THE PROPER SOLDER. USE CRIMP SPLICES FOR REPAIR). SOLDER SLEEVES SHALL USE SN96 SOLDER, USE P/N S200-X-00 OR EQUIVALENT.
4. ALL AIRFRAME GROUNDS SHALL BE VIA AMP LUG OR GROUNDING BLOCK AND PROVIDE SEPARATE GROUND STUD LOCATIONS FOR DC POWER GROUNDS, AC POWER GROUNDS, CHASSIS GROUNDS, SIGNAL GROUNDS AND SHIELD GROUNDS.
5. ALL EQUIPMENT BONDING TO ADJACENT AIRFRAME STRUCTURE TO BE 0.003 OHM OR LESS. ALL ELECTRICAL GROUNDING AND BONDING TO BE INSTALLED IN ACCORDANCE WITH THE LATEST REVISION OF BHT-ELEC-SPM CHAPTER 8.
6. ALL CONNECTORS TO BE INSTALLED IN ACCORDANCE WITH THE LATEST REVISION OF BHT-ELEC-SPM CHAPTER 5 AND / OR CIRCULAR CONNECTOR INSTALLATION INSTRUCTIONS. ENSURE ALL UNUSED CONNECTOR CONTACTS ARE FILLED WITH SPARE PINS/SOCKETS OR PLASTIC GROMMET SEALING PLUGS. ENSURE ALL BULKHEAD MOUNTED CONNECTORS ARE PROPERLY BONDED TO AIRFRAME.
7. ROUTE ALL WIRES AND CABLES WITH EXISTING WIRE ROUTES WHERE POSSIBLE AND CLAMP IN ACCORDANCE WITH THE LATEST REVISION OF BHT-ELEC-SPM CHAPTER 6. WIRES MUST BE ROUTED WITH A MINIMUM OF 6 INCHES OF SEPARATION FROM OXYGEN AND FLUID LINES (MIN 2 INCHES IF WIRES IN CONDUIT).
8. INSTALL SYSTEM IN ACCORDANCE WITH THE LATEST REVISION OF THE MANUFACTURER INSTALLATION MANUAL.
9. LOWERCASE LETTER CONNECTOR PIN DESIGNATORS ARE SHOWN AS UNDERLINED UPPERCASE LETTERS.

Figure 4 – TBN-212-002 Wiring Diagram, -011 Installation

• COPYRIGHT © 2022 BY EAGLE COPTERS MAINTENANCE LTD •
THIS DOCUMENT IS PRIVATE AND CONFIDENTIAL AND IS SUPPLIED ON THE EXPRESS CONDITION THAT IT IS NOT TO BE USED FOR ANY PURPOSE OR COPIED OR COMMUNICATED TO ANY OTHER PERSON WITHOUT WRITTEN PERMISSION FROM EAGLE COPTERS MAINTENANCE LTD.

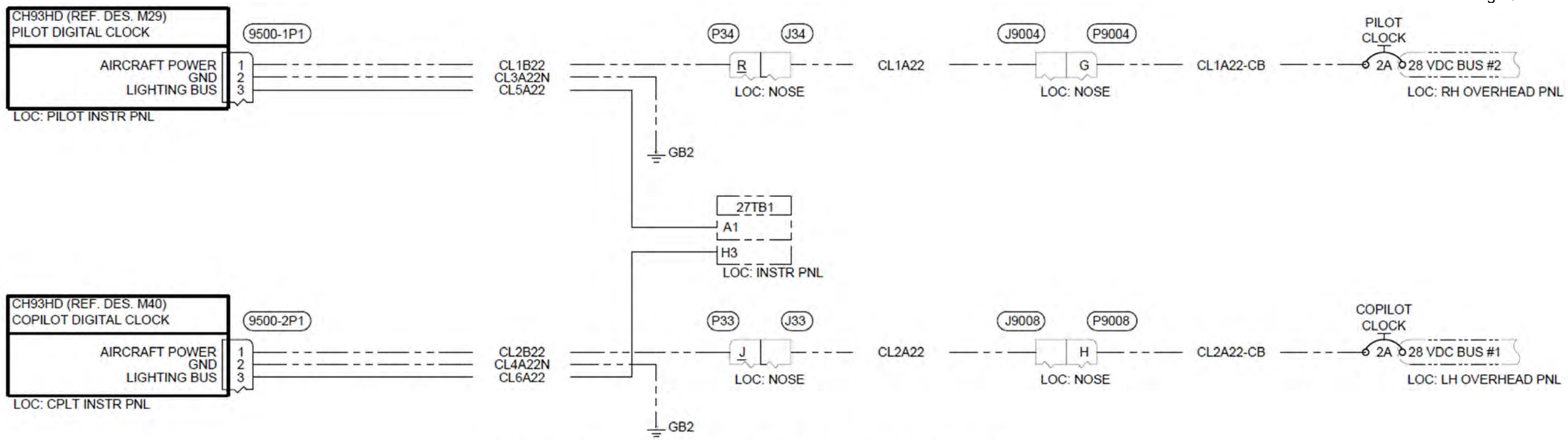

-013 INSTALLATION WITHOUT FLIGHT TIMER

——————— NEW WIRE / UNIT

NOTES: ——— – – ——— – – ——— EXISTING WIRE / UNIT

1. PERFORM ALL WORK IN ACCORDANCE WITH BELL HELICOPTER STANDARD PRACTICES MANUAL BHT-ELEC-SPM.
2. ALL NEW UNSHIELDED WIRE USE M22759/41-(XX)-9 OR EQUIVALENT TYPE WIRE. (M22759/41-(XX)-9 IS NOT INTENDED TO BE USED IN SOLDER APPLICATIONS, SOLDERABILITY CAN BE ACHIEVED WITH THE PROPER SOLDER. USE CRIMP SPLICES FOR REPAIR). ALL WIRES 22 AWG UNLESS OTHERWISE SPECIFIED BY WIRE CODE. ALL JUMPERS TO BE LESS THAN 6 INCHES.
3. ALL NEW SHIELDED WIRE USE M27500-(XX)SM(X)N23 OR EQUIVALENT TYPE WIRE. (M27500-(XX)SM(X)N23 IS NOT INTENDED TO BE USED IN SOLDER APPLICATIONS, SOLDERABILITY CAN BE ACHIEVED WITH THE PROPER SOLDER. USE CRIMP SPLICES FOR REPAIR). SOLDER SLEEVES SHALL USE SN96 SOLDER, USE P/N S200-X-00 OR EQUIVALENT.
4. ALL AIRFRAME GROUNDS SHALL BE VIA AMP LUG OR GROUNDING BLOCK AND PROVIDE SEPARATE GROUND STUD LOCATIONS FOR DC POWER GROUNDS, AC POWER GROUNDS, CHASSIS GROUNDS, SIGNAL GROUNDS AND SHIELD GROUNDS.
5. ALL EQUIPMENT BONDING TO ADJACENT AIRFRAME STRUCTURE TO BE 0.003 OHM OR LESS. ALL ELECTRICAL GROUNDING AND BONDING TO BE INSTALLED IN ACCORDANCE WITH THE LATEST REVISION OF BHT-ELEC-SPM CHAPTER 8.
6. ALL CONNECTORS TO BE INSTALLED IN ACCORDANCE WITH THE LATEST REVISION OF BHT-ELEC-SPM CHAPTER 5 AND / OR CIRCULAR CONNECTOR INSTALLATION INSTRUCTIONS. ENSURE ALL UNUSED CONNECTOR CONTACTS ARE FILLED WITH SPARE PINS/SOCKETS OR PLASTIC GROMMET SEALING PLUGS. ENSURE ALL BULKHEAD MOUNTED CONNECTORS ARE PROPERLY BONDED TO AIRFRAME.
7. ROUTE ALL WIRES AND CABLES WITH EXISTING WIRE ROUTES WHERE POSSIBLE AND CLAMP IN ACCORDANCE WITH THE LATEST REVISION OF BHT-ELEC-SPM CHAPTER 6. WIRES MUST BE ROUTED WITH A MINIMUM OF 6 INCHES OF SEPARATION FROM OXYGEN AND FLUID LINES (MIN 2 INCHES IF WIRES IN CONDUIT).
8. INSTALL SYSTEM IN ACCORDANCE WITH THE LATEST REVISION OF THE MANUFACTURER INSTALLATION MANUAL.
9. LOWERCASE LETTER CONNECTOR PIN DESIGNATORS ARE SHOWN AS UNDERLINED UPPERCASE LETTERS.

Figure 5 – TBN-212-002 Wiring Diagram, -013 Installation

• COPYRIGHT © 2022 BY EAGLE COPTERS MAINTENANCE LTD •
THIS DOCUMENT IS PRIVATE AND CONFIDENTIAL AND IS SUPPLIED ON THE EXPRESS CONDITION THAT IT IS NOT TO BE USED FOR ANY PURPOSE OR COPIED OR COMMUNICATED TO ANY OTHER PERSON WITHOUT WRITTEN PERMISSION FROM EAGLE COPTERS MAINTENANCE LTD.

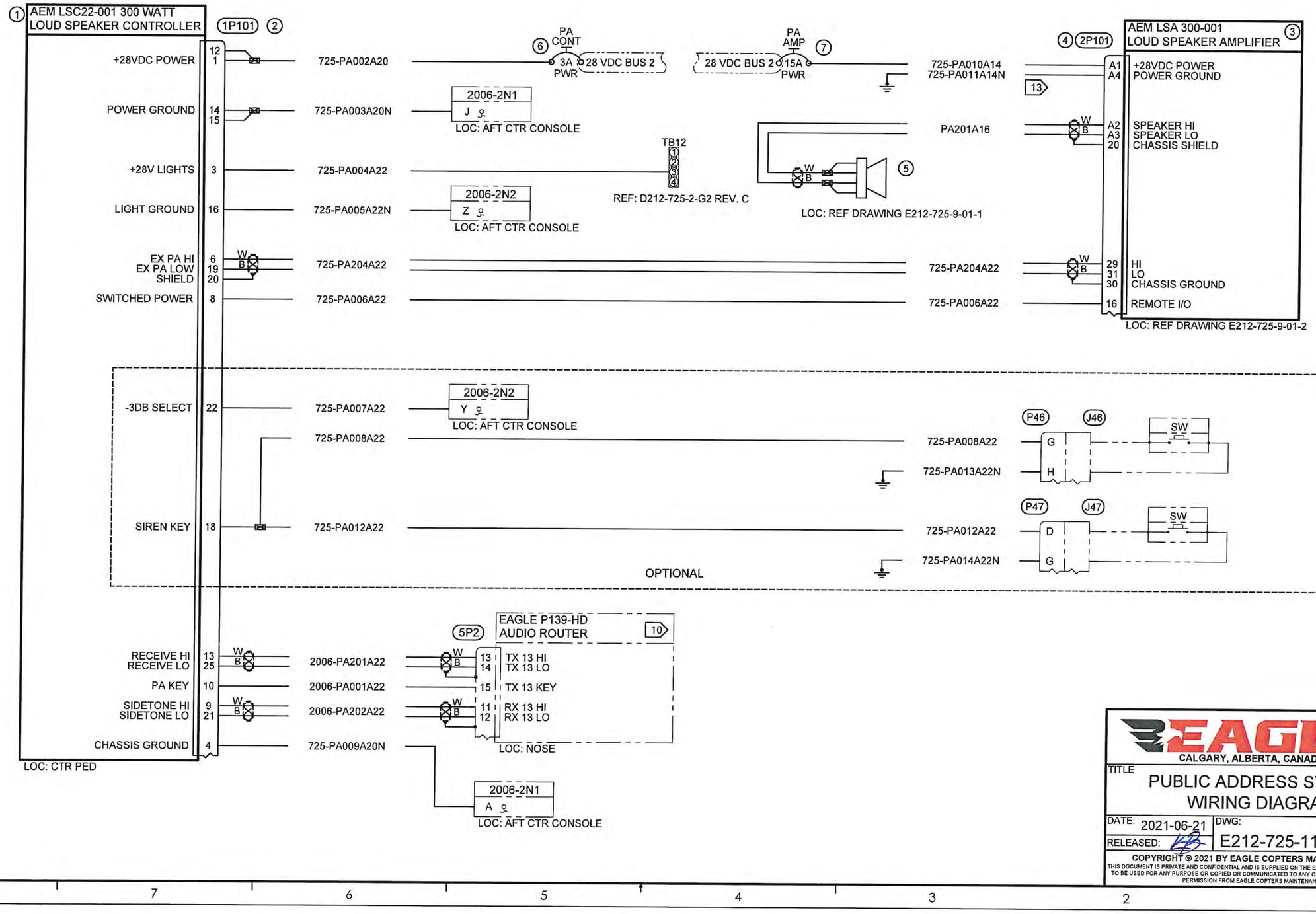

EAGLE
CALGARY, ALBERTA, CANADA

TITLE
PUBLIC ADDRESS SYSTEM WIRING DIAGRAM

DATE: 2021-06-21	DWG: E212-725-11-1	REV A	SHEET 2 OF 2
RELEASED:			

COPYRIGHT © 2021 BY EAGLE COPTERS MAINTENANCE LTD
THIS DOCUMENT IS PRIVATE AND CONFIDENTIAL AND IS SUPPLIED ON THE EXPRESS CONDITION THAT IT IS NOT TO BE USED FOR ANY PURPOSE OR COPIED OR COMMUNICATED TO ANY OTHER PERSON WITHOUT WRITTEN PERMISSION FROM EAGLE COPTERS MAINTENANCE LTD.

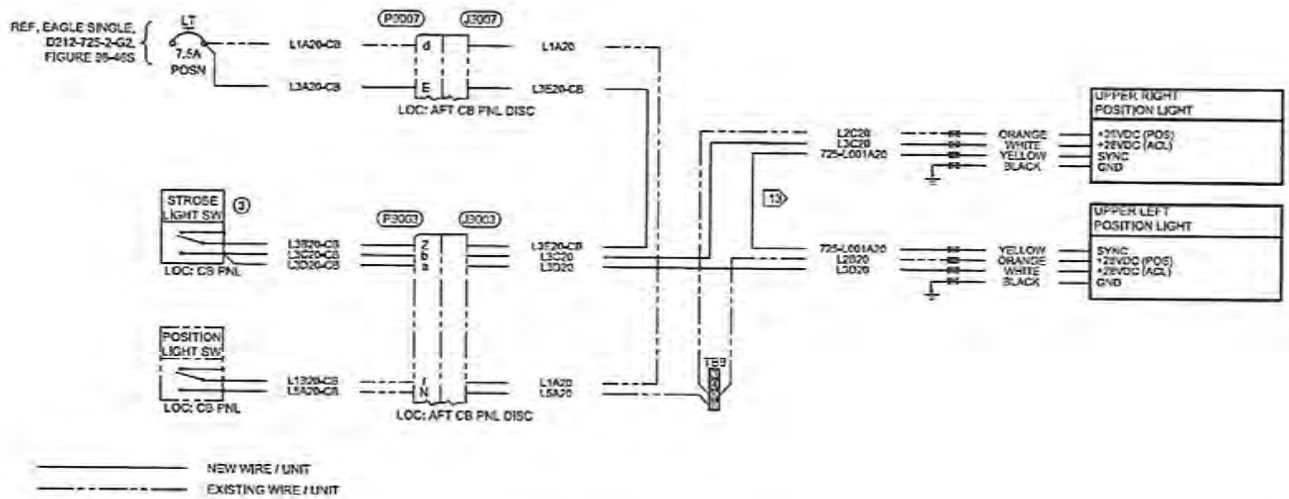

NOTES:

1. PERFORM ALL WORK IN ACCORDANCE WITH BELL HELICOPTER STANDARD PRACTICES MANUAL BHT-ELEC-SPM.
2. ALL NEW UNSHIELDED WIRE USE M22759/41-XXX-9 OR EQUIVALENT TYPE WIRE. (M22759/41-XXX-9 IS NOT INTENDED TO BE USED IN SOLDER APPLICATIONS. SOLDERABILITY CAN BE ACHIEVED WITH THE PROPER SOLDER. USE CRIMP SPLICES FOR REPAIR). ALL WIRES 22 AWG UNLESS OTHERWISE SPECIFIED BY WIRE CODE. ALL JUMPERS TO BE LESS THAN 6 INCHES.
3. ALL NEW SHIELDED WIRE USE M27500-XXXSM(X)N23 OR EQUIVALENT TYPE WIRE. (M27500-XXXSM(X)N23 IS NOT INTENDED TO BE USED IN SOLDER APPLICATIONS. SOLDERABILITY CAN BE ACHIEVED WITH THE PROPER SOLDER. USE CRIMP SPLICES FOR REPAIR). SOLDER SLEEVES SHALL USE SN96 SOLDER. USE P/N S200-X-00 OR EQUIVALENT.
4. ALL AIRFRAME GROUNDS SHALL BE VIA AMP LUG OR GROUNDING BLOCK AND PROVIDE SEPARATE GROUND STUD LOCATIONS FOR DC POWER GROUNDS, AC POWER GROUNDS, CHASSIS GROUNDS, SIGNAL GROUNDS AND SHIELD GROUNDS.
5. ALL EQUIPMENT BONDING TO ADJACENT AIRFRAME STRUCTURE TO BE 0.003 OHM OR LESS. ALL ELECTRICAL GROUNDING AND BONDING TO BE INSTALLED IN ACCORDANCE WITH THE LATEST REVISION OF BHT-ELEC-SPM CHAPTER 8.
6. ALL TERMINALS TO BE INSTALLED IN ACCORDANCE WITH THE LATEST REVISION OF BHT-ELEC-SPM PARAGRAPH 4-9.
7. ALL CONNECTORS TO BE INSTALLED IN ACCORDANCE WITH THE LATEST REVISION OF BHT-ELEC-SPM CHAPTER 5 AND / OR CIRCULAR CONNECTOR INSTALLATION INSTRUCTIONS. ENSURE ALL UNUSED CONNECTOR CONTACTS ARE FILLED WITH SPARE PINS/SOCKETS OR PLASTIC GROMMET SEALING PLUGS. ENSURE ALL BULKHEAD MOUNTED CONNECTORS ARE PROPERLY BONDED TO AIRFRAME.
8. ENSURE ALL SWITCHES, CIRCUIT BREAKERS, AND REMOTE MOUNTED BOXES ARE LABELED WITH A CONSISTENT SIZE, FONT, COLOR, BACKGROUND AND ARE ILLUMINATED CONSISTENT AS EXISTING LABELS.
9. ROUTE ALL WIRES AND CABLES WITH EXISTING WIRE ROUTES WHERE POSSIBLE AND CLAMP IN ACCORDANCE WITH THE LATEST REVISION OF BHT-ELEC-SPM CHAPTER 6. WIRES MUST BE ROUTED WITH A MINIMUM OF 6 INCHES OF SEPARATION FROM OXYGEN AND FLUID LINES (MIN 2 INCHES IF WIRES IN CONDUIT).
10. INSTALL SYSTEM IN ACCORDANCE WITH THE LATEST REVISION OF THE MANUFACTURES INSTALLATION MANUAL.
11. LOWERCASE LETTER CONNECTOR PIN DESIGNATORS ARE SHOWN AS UNDERLINED UPPERCASE LETTERS.
12. 20 AWG POWER WIRES NOT TO EXCEED 28 FT FROM A 7.5A CIRCUIT BREAKER.
13. OPTIONAL INSTALLATION. IF SYNCHRONIZATION IS NOT NECESSARY, THE CONNECTION MAY BE LEFT OPEN AND THE YELLOW WIRES ARE CAPPED AND STOWED.

Figure 3 Installation Wiring Diagram

DESIGN	MC	EAGLE COPTERS LTD CALGARY, AB, CANADA
DRAWN	MC	
CHECKED	WK	DRAWING NO. TB-E212-725-5 REV. A
MFG. APPR.	CD/CG	SHEET 6 OF 8
APPROVED	KB	TITLE POSITION/STROBE LIGHT INSTALLATION
DE APPR.		
DATE	2021-09-17	

COPYRIGHT © 2021 BY EAGLECOPTERS LTD.
THIS DOCUMENT IS PRIVET AND CONFIDENTIAL AND IS SUPPLIED ON THE EXPRESS CONDITION THAT IT IS NOT TO BE USED FOR ANY PURPOSE OR COPIED OR COMMUNICATED TO ANY OTHER PERSON WITHOUT WRITTEN PERMISSION FROM EAGLECOPTERS LTD.